July 1999 • NREL/TP-580-26157

Technical Report

Lignocellulosic Biomass to Ethanol Process Design and Economics Utilizing Co-Current Dilute Acid Prehydrolysis and Enzymatic Hydrolysis Current and Futuristic Scenarios

Robert Wooley, Mark Ruth, John Sheehan, Kelly Ibsen
Biotechnology Center for Fuels and Chemicals

Henry Majdeski, Adrian Galvez
Delta-T Corporation

National Renewable Energy Laboratory

1617 Cole Boulevard
Golden, Colorado 80401-3393

NREL is a U.S. Department of Energy Laboratory
Operated by Midwest Research Institute · Battelle · Bechtel

Contract No. DE-AC36-98-GO10337

NOTICE

This report was prepared as an account of work sponsored by an agency of the United States government. Neither the United States government nor any agency thereof, nor any of their employees, makes any warranty, express or implied, or assumes any legal liability or responsibility for the accuracy, completeness, or usefulness of any information, apparatus, product, or process disclosed, or represents that its use would not infringe privately owned rights. Reference herein to any specific commercial product, process, or service by trade name, trademark, manufacturer, or otherwise does not necessarily constitute or imply its endorsement, recommendation, or favoring by the United States government or any agency thereof. The views and opinions of authors expressed herein do not necessarily state or reflect those of the United States government or any agency thereof.

Available to DOE and DOE contractors from:
Office of Scientific and Technical Information (OSTI)
P.O. Box 62
Oak Ridge, TN 37831
Prices available by calling 423-576-8401

Available to the public from:
National Technical Information Service (NTIS)
U.S. Department of Commerce
5285 Port Royal Road
Springfield, VA 22161
703-605-6000 or 800-553-6847
or
DOE Information Bridge
http://www.doe.gov/bridge/home.html

Printed on paper containing at least 50% wastepaper, including 20% postconsumer waste

Abstract

The National Renewable Energy Laboratory (NREL) has undertaken a complete review and update of the process design and economic model for the biomass-to-ethanol process based on co-current dilute acid prehydrolysis, along with simultaneous saccharification (enzymatic) and co-fermentation. The process design includes the core technologies being researched by the U.S. Department of Energy (DOE): prehydrolysis, simultaneous saccharification and co-fermentation, and cellulase enzyme production. In addition, all ancillary areas—feed handling, product recovery and purification, wastewater treatment lignin burner and boiler-turbogenerator, and utilities—are included. NREL engaged Delta-T Corporation to assist in the process design evaluation, the process equipment costing, and overall plant integration. The process design and costing for the lignin burner and boiler turbogenerator has been reviewed by Reaction Engineering Inc. and the wastewater treatment by Merrick & Company. An overview of both reviews is included here.

The purpose of this update was to ensure that the process design and equipment costs were reasonable and consistent with good engineering practice for plants of this type using available technical data. For the non-research areas this means using equipment and process approaches as they are currently being used in industrial applications. For areas currently being researched by NREL, we used the best research estimates of near-term data to develop a process design and equipment specifications consistent with existing similar commercial operations.

This work has resulted in an economic model that can be used to predict the cost of producing ethanol from cellulosic biomass using this technology if a plant were to be built in the next few years. The model was also extended using technology improvements that are expected to be developed based on the current DOE research plan. Future process designs and cost estimates are given for the years 2005, 2010, and 2015.

The process design and economic model will also be useful for predicting the cost benefits of proposed research. Proposed research results can be translated into modifications of the process design and the economic impact assessed. This will allow DOE, NREL, and other researchers to set priorities on future research based on its potential to reduce the cost of producing ethanol.

Table of Contents

I Introduction 1
I.1 Approach 2
I.2 Process Overview 4
I.3 Plant Size 6
I.3.1 Switchgrass 6
I.3.2 Corn Stover 7
I.3.3 The Effect of Distance on Collection Costs 7
I.3.4 Choice of Plant Size 8
I.3.5 Other Considerations 9
I.4 Feedstock and its Composition 10

II Process Design and Cost Estimating 11
II.1 Feedstock Storage and Handling – Area 100 (PFD-P100-A101) 11
II.1.1 Overview 11
II.1.2 Design Basis 11
II.1.3 Cost Estimation 12
II.2 Pretreatment and Hydrolyzate Conditioning – Area 200 (PFD-P100-A201-3) 12
II.2.1 Overview 12
II.2.2 Design Basis Description 13
II.2.3 Cost Estimation 17
II.3 Simultaneous Saccharification and Co-Fermentation (SSCF) – Area 300 (PFD-P100-A301-2) 18
II.3.1 Overview 18
II.3.2 Design Basis Description 18
II.3.3 Cost Estimation 23
II.4 Enzyme Production – Area 400 (PFD-P100-A401-2) 23
II.4.1 Overview 23
II.4.2 Design Basis Description 24
II.4.3 Cost Estimation 28
II.5 Product Recovery and Water Recovery (Distillation, Dehydration and Evaporation) Area 500 (PFD-P100-A501-4) 31
II.5.1 Overview 31
II.5.2 Design Basis Description 33
II.5.2.1 Physical Property Model and Parameters 34
II.5.3 Cost Estimation 36
II.6 Wastewater Treatment – Area 600 (PFD-P100-A601-3) 36
II.6.1 Overview 36
II.6.2 Design Basis Description 38
II.6.3 Cost Estimation 38
II.7 Product and Feed Chemical Storage – Area 700 (PFD-P100-A701) 39
II.7.1 Overview 39
II.7.2 Design Basis Description 39
II.7.3 Cost Estimation 39
II.8 Burner, Boiler and Turbogenerator – Area 800 (PFD-P100-A801-3) 40
II.8.1 Overview 40
II.8.2 Design Basis Description 41

II.8.3 Cost Estimation 43
II.9 Utilities – Area 900 (PFD-P100-A901-3) 44
II.9.1 Overview 44
II.9.2 Design Basis Description 45
II.9.3 Cost Estimation 46

III Process Economics 47
III.1 Analysis Procedure 47
III.1.1 Total Project Investment 47
III.1.2 Variable Operating Costs 50
III.1.3 Fixed Operating Costs 51
III.1.4 Discounted Cash Flow Analysis and the Selling Cost of Ethanol 53

IV Futuristic Cases 56
IV.1 Future Technology Pathways for Cost Reduction 56
IV.1.1 Cellulase Enzyme Development 57
IV.1.2 Fermentation Organism Development 58
IV.1.3 Process Development and Integration 58
IV.1.4 Long Term Potential for Agricultural Biotechnology 59
IV.2 Economics of Futuristic Cases 60
IV.2.1 Near Term, Best of Industry 61
IV.2.2 Future Case, Year 2005 61
IV.2.3 Future Case, Year 2010 62
IV.2.4 Future Case, Year 2015 62
IV.3 Summary of Futuristic Cases 63

V. Improvements and Extension to the Model Planned or Currently Underway 66
V.1 Burner/Boiler Turbo-generator Model Improvements 66
V.2 Enzyme Production Optimization 66
V.3 Pretreatment Reactor Costs 66
V.4 Liquid Solid Separations Costs 66
V.5 Lignin Gasification and Gas Turbine Power Generation 66

References 67

Appendix A – NREL Biofuels Process Design Database Description and Summary
Appendix B – Individual Equipment Costs Summary
Appendix C – Chemical Costs and Sources
Appendix D – Discounted Cash Flow Rate of Return Summary
Appendix E – Comparison of Experimentally Measured and Modeled Information
Appendix F – Other Summary Model Results
Appendix G – Process Flow Diagrams

Figures

Fig. 1 NREL's Approach to Process Design and Economic Analysis 2
Fig. 2 Overall Process, PFD-P100-A000.....5
Fig. 3 Collection Distance as a Function of Plant Size for Switchgrass and Corn Stover.....7
Fig. 4 Hauling Charges for Corn Stover as a Function of Distance 8
Fig. 5 The Effect of Plant Size on Incremental Feedstock Cost 9
Fig. 6 Pretreatment Process Area Overview, PFD-P100-A200.....14
Fig. 7 SSCF Seed Batch Cycles.....19
Fig. 8 Batch Cycles for Cellulase Seed and Production Fermentation.....25
Fig. 9 Required Cellulase Reactor Air Flow as a Function of Vessel H/D and Agitator Power 29
Fig. 10 Required Cellulase Reactor Air Flow as a Function of Feed Oxygen Concentration.....29
Fig. 11 Overall Ethanol Cost as a Function of Cellulase Reactor H/D.....30
Fig. 12 Overall Ethanol Cost as a Function of Cellulase Feed Oxygen Concentration.....30
Fig. 13 Distillation System Overview, PFD-P100-A500.....32
Fig. 14 Wastewater Treatment process Overview, PFD-P100-A600 37
Fig. 15 CFBC/Turbogenerator Energy Balance 40
Fig. 16 Cost Contribution Details From Each Process Area…… 56
Fig. 17 Future Projection of the Cost of Ethanol Production from Cellulosic Biomass.....63
Fig. 18 Cost Breakdown of Current and Future Cases…….. 64
Fig. 19 Future Projection of Ethanol Yield from Cellulosic Biomass.....64
Fig. 20 Future Projection of the Cost of Ethanol as a Function of Feedstock Cost.....65

Tables

Table 1 Feedstock Composition 10
Table 2 Pretreatment Reactor Conditions 13
Table 3 Pretreatment Hydrolyzer Reactions and Conversions 15
Table 4 Coupon Corrosion Data on Several Metals 18
Table 5 Seed Train Specifications 20
Table 6 SSCF Seed Train Reactions and Conversion 20
Table 7 SSCF Production Specifications 21
Table 8 Production SSCF Saccharification Reactions and Conversions 21
Table 9 SSCF Fermentation Reactions and Conversions 22
Table 10 Production SSCF Contamination Loss Reactions 22
Table 11 Cellulase Production Parameters 24
Table 12 Cellulase Production Nutrient Requirements 26
Table 13 NRTL Activity Coefficient Model Parameters 35
Table 14 Vapor Pressure Model Parameters 36
Table 15 Comparison of Sending Evaporator Syrup to the Burner or Wastewater Treatment 38
Table 16 Boiler Costs 43
Table 17 Installation Factors 48
Table 18 Chemical Engineering Purchased Equipment Index 48
Table 19 Chem Systems Additional Cost Factors 49
Table 20 Total Installed Equipment Costs by Process Area 50
Table 21 Total Project Investment 50
Table 22 Variable Operating Costs 51
Table 23 Inorganic Chemical Index 51
Table 24 Fixed Operating Costs 52
Table 25 Labor Index 53
Table 26 Construction Activities and Cash Flow 54
Table 27 Discounted Cash Flow Parameters 55
Table 28 Near Term Base Case Results Summary 55
Table 29 Out Year Parameter Changes 60
Table 30 Near Term, Best of Industry Improvements from Base Case 61
Table 31 Year 2005 Improvements from Best of Industry 62
Table 32 Year 2010 Improvements from Year 2005 62
Table 33 Year 2015 Improvements from Year 2010 63

Appendix A

NREL Biofuels Process Design Database Description and Summary

Appendix A NREL Process Database Description and Summary

NREL's Process Engineering Team has developed a database of primary information on all of the equipment in the near term base case model. This database contains information about the cost, reference year, scaling factor, scaling characteristic, design information and back-up cost referencing. The information is stored in a secure database in the Alternative Fuels Data Center and can be directly linked to the economic portion of the model. In addition to having all of the cost information used by the model, it has the ability to store documents pertaining to the piece of equipment. These include sizing and costing calculations and vendor information when available.

The following summarizes the important fields of information contained in the database. A partial listing of the information is attached for each piece of equipment. Addition information from the database is contained in the equipment cost listing in Appendix B.

Equipment Number:[AB]	Unique identifier, the first letter indicates the equipment type and the first number represents the process area, e.g., P-301 is a pump in Area 300
Equipment Name:[AB]	Descriptive Name of the piece of Equipment
Associated PFD:	PFD number on which the piece of equipment appears, e.g., PFD-P100-A101
Equipment Category:[A]	Code indicating the general type of equipment, e.g., PUMP
Equipment Type:[A]	Code indicating the specific type of equipment, e.g., CENTRIFUGAL for a pump
Equipment Description:[A]	Short description of the size or characteristics of the piece of equipment, e.g., 20 gpm, 82 ft head, for a pump.
Number Required:[B]	Number of duplicate pieces of equipment needed.
Number Spares:[B]	Number of on-line spares.
Scaling Stream:	Stream number or other characteristic variable from the ASPEN model by which the equipment cost will be scaled.
Base Cost:[B]	Equipment cost.
Cost Basis:[A]	Source of the equipment cost, e.g., ICARUS or VENDOR.
Cost Year:[B]	Year for which the cost estimate is based.
Base for Scaling:	Value of the scaling stream or variable for which the equipment is based.
Base Type:	Type of variable used for scaling, e.g., FLOW, DUTY, etc.
Base Units:	Units of the scaling stream or variable, e.g., KG/HR, CAL/S.
Installation Factor:[B]	Installation multiplier. Installed Cost = Base Cost x Installation Factor.
Installation Factor Basis:[A]	Source of installation factor value, e.g., ICARUS, VENDOR.
Scale Factor Exponent:[B]	Value for exponential scaling equation
Scale Factor Basis:[A]	Source of scaling exponent value, e.g., GARRETT, VENDOR
Material of Construction:[A]	Material of construction
Notes:	Any other important information about the design or cost.
Document:	Complete, multi-page document containing design calculations, vendor literature and quotations and any other important information. This is stored as an electronic document and can be pages from a spreadsheet, other electronic sources or scanned information from vendors.
Design Date:	Original date for the design of this piece of equipment.
Modified Date:	The system automatically marks the date in this field whenever a field is changed.

[A] These fields are listed for all pieces of equipment in this Appendix.
[B] These fields are part of the equipment cost listing in Appendix B.

Eguip. No.	Equipment Name	Eq. Category	Eq. Type	Equipment Description	Cost Basis	Install. Fact. Basis	Scale Fact. Basis	Material Const.
PFD-P100-A101								
C-101	Hopper Feeder	CONVEYOR	VIBRATING-FEEDER	24" x 42" electromechanical feeder. Rated at 175 TPH for 50 lb/cf coal.	RICHARDSON	DELTA-T98	GARRETT	CS
C-102	Transfer Belt Conveyor	CONVEYOR	BELT	Inclined Belt Conveyor, 210 ft long, 36" wide, fully covered.	VENDOR	DELTA-T98	GARRETT	CS
C-103	Radial Stacker Conveyor	CONVEYOR	BELT	Radial stacking conveyor, 150 ft long, 36" wide, 125 ft covered.	VENDOR	DELTA-T98	GARRETT	CS
C-104	Reclaim Hopper Feeder	CONVEYOR	VIBRATING-FEEDER	24" x 42" electromechanical feeder. Rated at 175 TPH for 50 lb/cf coal.	RICHARDSON	DELTA-T98	GARRETT	CS
C-105	Reclaim Hopper Conveyor	CONVEYOR	BELT	Overhead belt conveyor, 450' long, 36" wide.	VENDOR	DELTA-T98	GARRETT	CS
C-106	Chip Washer Feeder	CONVEYOR	VIBRATING-FEEDER	18" x 30" electromechanical feeder. Rated at 100 TPH for 50 lb/cf coal.	RICHARDSON	DELTA-T98	GARRETT	CS
C-107	Scalper Screen Feeder	CONVEYOR	BELT	42" horizontal drag chain conveyor. Capacity of 4800 tpd.	VENDOR	DELTA-T98	GARRETT	CS
C-108	Pretreatment Feeder	CONVEYOR	BELT	Consists of two parts, a 18" x 42" inclined chain belt and a 42" horizontal unit.	VENDOR	DELTA-T98	GARRETT	CS
M-101	Hydraulic Truck Dump with Scale	SCALE	TRUCK-SCALE	Hydraulic Truck Dumper with Scale	VENDOR	DELTA-T98	DEFAULT	CS
M-103	Front End Loaders	VEHICLE	LOADER	Used diesel front end loaders.	DELTA-T98	UNKNOWN		
M-104	Disk Refiner System	SIZE-REDUCTION		Disk type chip shredder, 50" disk, capacity of 400-500 ODT/D. Includes chip surge bins and discharger.	VENDOR	DELTA-T98	GARRETT	SS316
S-101	Magnetic Separator	SEPARATOR	MAGNET	Tramp iron magnet separator.	VENDOR	DELTA-T98	DEFAULT	
S-102	Scalper Screener	SEPARATOR	SCREEN	Screener removing gross oversize material.	VENDOR	DELTA-T98	GARRETT	CS
S-103	Chip Thickness Screen	SEPARATOR	SCREEN	Screen for chip thickness.	VENDOR	DELTA-T98	GARRETT	CS
T-101	Dump Hopper	TANK	VERTICAL-VESSEL	20' x 20' Bin, Tapering to 3' x 3' at Bottom. Capacity 6345 cf, two truck loads.	DELTA-T98	DELTA-T98	GARRETT	CS
T-102	Reclaim Hopper	TANK	VERTICAL-VESSEL	20' x 20' bin tapering to 3' x 3'. Capacity 6345 cf, for a combined total of 1 hour residence time.	DELTA-T98	DELTA-T98	GARRETT	CS
T-103	Washing/Refining Surge Bin	TANK	VERTICAL-VESSEL	20' x 20' bin tapering to 3' x 3'. Capacity of 8745 cf each for a residence time of 4 hours.	DELTA-T98	DELTA-T98	GARRETT	CS
W-101	Chip Washer System	SEPARATOR	MISCELLANEOUS	Capacity 500 to 600 ODT/d. Scrap separator, screw drainer, circulation pump and cyclone separator.	VENDOR	DELTA-T98	NREL-ESTM	SS304;SS316
PFD-P100-A201,2,3								
A-201	In-line Sulfuric Acid Mixer	MIXER	STATIC	Static Mixer, 248 gpm total flow.	ICARUS	DELTA-T98	ICARUS	SS304
A-202	In-line NH3 Mixer	MIXER	STATIC	Static Mixer, 240 gpm total flow	ICARUS	DELTA-T98	ICARUS	SS304
A-209	Overliming Tank Agitator	AGITATOR	FIXED-PROP	Top Mounted, 1800 rpm, 25 hp	ICARUS	DELTA-T98	GARRETT	SS
A-224	Reacidification Tank Agitator	AGITATOR	FIXED-PROP	Top-Mounted, 1800 rpm, 93 hp	ICARUS	DELTA-T98	GARRETT	SS
A-232	Reslurrying Tank Agitator	AGITATOR	FIXED-PROP	Top-Mounted, 1800 rpm, 50 hp	ICARUS	DELTA-T98	GARRETT	SS
A-235	In-line Acidification Mixer	MIXER	STATIC	Static-Mixer, 720 gpm total flow	ICARUS	DELTA-T98	NREL-ESTM	304SS
C-201	Hydrolyzate Screw Conveyor	CONVEYOR	SCREW	18" dia. X 33' long, 7600 cfh max flow	ICARUS	DELTA-T98	GARRETT	SS316
C-202	Wash Solids Screw Conveyor	CONVEYOR	SCREW	18" dia. X 16' long, 7600 cfh max flow	ICARUS	ICARUS	MULTI-UNIT	SS304
C-225	Lime Solids Feeder	CONVEYOR	ROTARY-VALVE	8" dia., 140 cfh, 7000 lb/hr max flow	ICARUS	DELTA-T98		A285C
H-200	Hydrolyzate Cooler	HEATX	SHELL-TUBE	Fixed Tube Sheet,1990 sf, 27" dia. X 20' long	ICARUS	DELTA-T98	GARRETT	304SS;CS
H-201	Beer Column Feed Economizer	HEATX	SHELL-TUBE	Floating Head, 6266 sf, 48" dia x 23' long	ICARUS	DELTA-T98	GARRETT	304SS
M-202	Prehydrolysis Reactor System	REACTOR	SCREW	Vertical Screw, 10 min residence time	VENDOR	CHEMSYST94	GARRETT	HASTELLOY-C 200;SS316L
P-201	Sulfuric Acid Pump	PUMP	CENTRIFUGAL	4 gpm, 245 ft. head	ICARUS	DELTA-T98	GARRETT	SS304
P-209	Overlimed Hydrolyzate Pump	PUMP	CENTRIFUGAL	687 gpm, 150 ft. head	ICARUS	DELTA-T98	GARRETT	304SS
P-222	Filtered Hydrolyzate Pump	PUMP	CENTRIFUGAL	721 gpm, 150 ft head	ICARUS	DELTA-T98	GARRETT	304SS
P-223	Lime Unloading Blower	FAN	CENTRIFUGAL	7425 cfm, 6 psi, 22275 lb/hr	DELTA-T98	DELTA-T98	GARRETT	C.S.
P-224	Fermentation Feed Pump	PUMP	ROTARY-LOBE	737 gpm, 200 ft head	VENDOR	ICARUS	VENDOR	304SS
P-225	ISEP Elution Pump	PUMP	CENTRIFUGAL	232 gpm, 150 ft head	ICARUS	DELTA-T98	GARRETT	SS304
P-226	ISEP Reload Pump	PUMP	CENTRIFUGAL	358 gpm, 150 ft head	ICARUS	DELTA-T98	GARRETT	SS304
P-227	ISEP Hydrolyzate Feed Pump	PUMP	CENTRIFUGAL	700 gpm, 150 ft head	ICARUS	DELTA-T98	GARRETT	SS304
P-239	Reacidified Liquor Pump	PUMP	CENTRIFUGAL	720 gpm, 100 ft head	ICARUS	DELTA-T98	GARRETT	SS304
S-202	Pre-IX Belt Filter Press	S/L SEPARATOR	BELT-FILTER-PRESS	181 gpm slurry each, 16.7% insoluble solids	VENDOR	ICARUS	GARRETT	SS316
S-221	ISEP	SEPARATOR	CONT-IX	20 chambers (39" dia. X 84" high), 4" dia. Valve - Weak Base Resin	VENDOR	NREL-ESTM	VENDOR	SS316;POLYPROP;RESIN-LINED-(
S-222	Hydroclone & Rotary Drum Filter	S/L SEPARATOR	ROTARY-DRUM	Hydrocyclone and Vacuum Filter	VENDOR	DELTA-T98	GARRETT	EPOXY LINED
S-227	LimeDust Vent Baghouse	SEPARATOR	FABRIC-FILTER	8333 cfm, 1389 sf, 6 cfm/sf	ICARUS	DELTA-T98	ICARUS	A285C;POLYESTER
T-201	Sulfuric Acid Storage	TANK	VERTICAL-VESSEL	6444 gal., 24 hr. residence time, 90% wv	DELTA-T98	DELTA-T98	GARRETT	PLASTIC
T-203	Blowdown Tank	TANK	VERTICAL-VESSEL	14500 gal., 11' dia x 30' high, 10 min. res. time, 75% wv, 15 psig	ICARUS	ICARUS	GARRETT	SS316
T-209	Overliming Tank	TANK	VERTICAL-VESSEL	46200 gal., 16' dia. X 32' high, 1 hr. res. time, 90% wv, 15 psig	ICARUS	DELTA-T98	GARRETT	SS304
T-220	Lime Storage Bin	TANK	LIVE-BTM-BIN	4455 cf, 14' dia x 25' high, 1.5x rail car vol., atmospheric	ICARUS	DELTA-T98	ICARUS	CS
T-224	Reacidification Tank	TANK	FLAT-BTM-STORAGE	185200 gal., 32' dia x 32' high, 4 hr. res. time, 90% wv, atmospheric	ICARUS	DELTA-T98	GARRETT	SS304
T-232	Slurrying Tank	TANK	FLAT-BTM-STORAGE	24770 gal., 13' dia. X 25' high, 15 min. res. time, 90% wv, atmospheric	ICARUS	DELTA-T98	GARRETT	SS304

Note: Eq. Sizes Listed are for a Base Case and may have been scaled up or down in the final cost estimation.

Eguip. No.	Equipment Name	Eq. Category	Eq. Type	Equipment Description	Cost Basis	Install. Fact. Basis	Scale Fact. Basis	Material Const.
PFD-P100-A301,2								
A-300	SSCF Fermentor Agitators	AGITATOR	FIXED-PROP	Side Mounted, 2 per vessel, 75 hp each, 0.15 hp/1000 gal	DELTA-T98	DELTA-T98		SS304
A-301	Seed Hold Tank Agitator	AGITATOR	FIXED-PROP	Top Mounted, 1800 rpm, 23 hp, 0.1 hp/1000 gal	DELTA-T98	DELTA-T98	GARRETT	SS304
A-304	4th Seed Vessel Agitator	AGITATOR	FIXED-PROP	Top Mounted, 1800 rpm, 6 hp, 0.3 hp/1000 gal	ICARUS	DELTA-T98	GARRETT	SS
A-305	5th Seed Vessel Agitator	AGITATOR	FIXED-PROP	Top Mounted, 1800 rpm, 19 hp, 0.1 hp/1000 gal	DELTA-T98	DELTA-T98	GARRETT	SS
A-306	Beer Surge Tank Agitator	AGITATOR	FIXED-PROP	Top Mounted, 1800 rpm, 4 hp, 0.3 hp/1000 gal	ICARUS	DELTA-T98	GARRETT	SS304
F-300	SSCF Fermentors	TANK	FLAT-BTM-STORAGE	962,651 gal. each, 7 day residence total, 90% wv, API, atmospheric	VENDOR	DELTA-T98	MULTI-UNIT	SS304
F-301	1st SSCF Seed Fermentor	REACTOR	VERTICAL-VESSEL	20 gal, jacketed, agitated, 1.3' dia., 2' high, 15 psig	ICARUS	DELTA-T98		SS304
F-302	2nd SSCF Seed Fermentor	REACTOR	VERTICAL-VESSEL	194 gal., jacketed, agitated, 3' dia., 4' high, 2.5 psig	ICARUS	ICARUS		SS304
F-303	3rd SSCF Seed Fermentor	REACTOR	VERTICAL-VESSEL	1950 gal., jacketed, agitated, 6.5' dia, 8' high, 2.5 psig	ICARUS	DELTA-T98		SS304
F-304	4th SSCF Seed Fermentor	REACTOR	FLAT-BTM-STORAGE	19444 gal., 12' dia x 23' high, atmospheric	ICARUS	DELTA-T98	GARRETT	SS304
F-305	5th SSCF Seed Fermentor	REACTOR	FLAT-BTM-STORAGE	194500 gal., API, atmospheric	VENDOR	DELTA-T98	GARRETT	SS304
H-300	Fermentation Cooler	HEATX	PLATE-FRAME	2393 sf, 300 BTU/hr sf F	ICARUS	DELTA-T98	GARRETT	SS304
H-301	SSCF Seed Hydrolyzate Cooler	HEATX	PLATE-FRAME	773 sf, 300 BTU/hr sf F	DELTA-T98	DELTA-T98	GARRETT	SS304
H-302	SSCF Hydrolyzate Cooler	HEATX	PLATE-FRAME	3765 sf total, 1255 sf each, 300 BTU/hr sf F	DELTA-T98	DELTA-T98	GARRETT	SS304
H-304	4TH Seed Fermentor Coils	HEATX	IMMERSED-COIL	27 sf, 1" sch 40 pipe, 105 BTU/hr sf F	ICARUS	DELTA-T98	ICARUS	SS
H-305	5TH Seed Fermentor Coils	HEATX	IMMERSED-COIL	307 sf, 3" sch 40 pipe, 92 BTU/hr sf F	ICARUS	DELTA-T98	ICARUS	SS
P-300	SSCF Recirculation and Transfer Pump	PUMP	CENTRIFUGAL	1060 gpm, 150 ft head	ICARUS	DELTA-T98	GARRETT	SS304
P-301	SSCF Seed Transfer Pump	PUMP	ROTARY-LOBE	172 gpm, 150 ft head	VENDOR	CHEMSYST94	VENDOR	SS304
P-302	Seed Transfer Pump	PUMP	ROTARY-LOBE	1231 gpm total, 615 gpm each, 100 ft head	VENDOR	CHEMSYST94	VENDOR	SS304
P-306	Beer Transfer Pump	PUMP	CENTRIFUGAL	1632 gpm each, 171 ft head	ICARUS	DELTA-T98	GARRETT	SS304
T-301	SSCF Seed Hold Tank	TANK	FLAT-BTM-STORAGE	233,333 gal., API atmospheric	VENDOR	DELTA-T98	GARRETT	SS304
T-306	Beer Storage Tank	TANK	FLAT-BTM-STORAGE	15000 gal., 11' dia x 21' high, 8 min res. Time, 90% wv, atmospheric	ICARUS	DELTA-T98	GARRETT	SS304
PFD-P100-A-401,2								
A-400	Cellulase Fermentor Agitators	AGITATOR	AXIAL-IMPELLER	600 hp / agitator -- 1 agitator/vessel	VENDOR	DELTA-T98		SS304
F-400	Cellulase Fermentors	REACTOR	VERTICAL-VESSEL	267,631 gal / 25 psig / Cooling coils in tank costed as H400, 37 ft. height, 36 ft. diameter	DELTA-T98	DELTA-T98		SS304L
F-401	1st Cellulase Seed Fermentor	REACTOR	VERTICAL-VESSEL	33 gal / 15 psig / Jacketed / Agitator	ICARUS	DELTA-T98	GARRETT	SS304
F-402	2nd Cellulase Seed Fermentor	REACTOR	VERTICAL-VESSEL	661 gal / 15 psig / Jacketed./Agitator	ICARUS	DELTA-T98	GARRETT	SS304
F-403	3rd Cellulase Seed Fermentor	REACTOR	VERTICAL-VESSEL	13210 gal / 15 psig / Jacketed./Agitator	ICARUS	DELTA-T98	GARRETT	SS304
H-400	Cellulase Fermentation Cooler	HEATX	IMMERSED-COIL	Immersible Coil 613 ft2	ICARUS	DELTA-T98	GARRETT	SS304
M-401	Fermentor Air Compressor Package	COMPRESSOR	CENTRIFUGAL	22271 scfm, 55 psig outlet, 4000 hp	VENDOR	DELTA-T98	GARRETT	CS
P-400	Cellulase Transfer Pump	PUMP	CENTRIFUGAL	175 GPM / 100 ft. head	ICARUS	DELTA-T98	GARRETT	SS
P-401	Cellulase Seed Pump	PUMP	ROTARY-LOBE	72.5 gpm / 5 hp	VENDOR	DELTA-T98		SS316
P-405	Media Pump	PUMP	CENTRIFUGAL	62.5 Gpm/100 Ft Head	ICARUS	DELTA-T98	GARRETT	SS
P-420	Anti-foam Pump	PUMP	CENTRIFUGAL	11.2 gpm / 75 ft head	ICARUS	DELTA-T98	GARRETT	CS
T-405	Media-Prep Tank	TANK	VERTICAL-VESSEL	6250 Gal / 1.17 hp Agitator	ICARUS	DELTA-T98	GARRETT	SS304
T-420	Anti-foam Tank	TANK	VERTICAL-VESSEL	200 gal, 3 hr. residence time	DELTA-T98	DELTA-T98	UNKNOWN	POLYETHYLENE

Note: Eq. Sizes Listed are for a Base Case and may have been scaled up or down in the final cost estimation.

Eguip. No.	Equipment Name	Eq. Category	Eq. Type	Equipment Description	Cost Basis	Install. Fact. Basis	Scale Fact. Basis	Material Const.
PFD-P100-A-501,2,3,4								
D-501	Beer Column	COLUMN	DISTILLATION	13.5' dia, 32 Actual Trays, Nutter V-Grid Trays	DELTA-T98	DELTA-T98	GARRETT	SS304
D-502	Rectification Column	COLUMN	DISTILLATION	11.5' dia.(rect)., 4' dia. (strip) x 18" T.S., 60 act. Trays, 60% eff., Nutter V-Grid trays	DELTA-T98	DELTA-T98	GARRETT	SS
E-501	1st Effect Evaporation	HEATX	SHELL-TUBE	22280 sf each., 135 BTU/hr sf F	DELTA-T98	DELTA-T98	GARRETT	SS316
E-502	2nd Effect Evaporation	HEATX	SHELL-TUBE	22278 sf., 170 BTU/hr sf F	DELTA-T98	DELTA-T98	GARRETT	SS316
E-503	3rd Effect Evaporation	HEATX	SHELL-TUBE	22278 sf each., 170 BTU/hr sf F	DELTA-T98	DELTA-T98	GARRETT	SS316
H-501	Beer Column Reboiler	HEATX	SHELL-TUBE	Fixed TS, 13899 sf, 41" dia., 20' long, 178 BTU/hr sf F	DELTA-T98	DELTA-T98	GARRETT	SS304;CS
H-502	Rectification Column Reboiler	HEATX	SHELL-TUBE	Thermosyphon, 1089 sf, 20" dia., 20' long, 130 BTU/hr sf F	ICARUS	DELTA-T98	GARRETT	SS304;CS
H-504	Beer Column Condenser	HEATX	SHELL-TUBE	Floating Head, 880 sf, 20" dia., 22' long, 92 BTU/hr sf F	DELTA-T98	DELTA-T98	GARRETT	SS304;CS
H-505	Rectification Column Condenser	HEATX	SHELL-TUBE	Fixed TS, 4146 sf, 39" dia, 20' long, 157 BTU/hr sf F	DELTA-T98	DELTA-T98	GARRETT	SS304;CS
H-512	Beer Column Feed Interchange	HEATX	PLATE-FRAME	909 sf, 200 BTU/hr sf F	DELTA-T98	DELTA-T98	GARRETT	SS
H-517	Evaporator Condenser	HEATX	SHELL-TUBE	Fixed TS, 8223 sf, 39" dia., 20' long, 220 BTU/hr sf F	DELTA-T98	DELTA-T98	GARRETT	SS304;CS
M-503	Molecular Sieve (9 pieces)	MISCELLANEOUS	PACKAGE	Superheater, twin mole sieve columns, product cooler, condenser, pumps, vacuum source.	VENDOR	DELTA-T98		SS
P-501	Beer Column Bottoms Pump	PUMP	CENTRIFUGAL	5053 gpm, 150 ft head	ICARUS	ICARUS	GARRETT	SS
P-503	Beer Column Reflux Pump	PUMP	CENTRIFUGAL	12 gpm, 140 ft head	DELTA-T98	DELTA-T98	GARRETT	SS
P-504	Rectification Column Bottoms Pump	PUMP	CENTRIFUGAL	154 gpm, 158 ft head	DELTA-T98	DELTA-T98	GARRETT	SS
P-505	Rectification Column Reflux Pump	PUMP	CENTRIFUGAL	437 gpm, 110 ft head	DELTA-T98	DELTA-T98	GARRETT	SS
P-511	1st Effect Pump	PUMP	CENTRIFUGAL	2393 gpm each, 110 ft head	ICARUS	DELTA-T98	GARRETT	SS
P-512	2nd Effect Pump	PUMP	CENTRIFUGAL	1261 gpm, 110 ft head	ICARUS	DELTA-T98	GARRETT	SS
P-513	3rd Effect Pump	PUMP	CENTRIFUGAL	412 gpm each, 110 ft head	ICARUS	DELTA-T98	GARRETT	SS
P-514	Evaporator Condensate Pump	PUMP	CENTRIFUGAL	617 gpm, 125 ft head	ICARUS	DELTA-T98	GARRETT	SS304
P-515	Scrubber Bottoms Pump	PUMP	CENTRIFUGAL	69 gpm, 104 ft head	DELTA-T98	DELTA-T98	GARRETT	SS
T-503	Beer Column Relfux Drum	TANK	HORIZONTAL-VESSEL	346 gal, 15 min res. Time, 50% wv, 3' dia., 6.5' long, 25 psig	ICARUS	DELTA-T98	GARRETT	SS304
T-505	Rectification Column Reflux Drum	TANK	HORIZONTAL-VESSEL	13106 gal, 15 min res time, 50% wv, 9' dia, 27.5' long, 25 psig	ICARUS	DELTA-T98	GARRETT	SS304
T-512	Vent Scrubber	COLUMN	ABSORBER	7' dia x 25' high, 4 stages, plastic Jaeger Tri-Packing	DELTA-T98	DELTA-T98	GARRETT	SS304;PLASTIC
PFD-P100-A601,2,3								
A-602	Equalization Basin Agitator	AGITATOR	FIXED-PROP	38 hp each, Fixed Prop, 0.1 hp/1000 gal	ICARUS	DELTA-T98	GARRETT	SS
A-606	Anaerobic Agitator	AGITATOR	FIXED-PROP	Fixed Prop, 41 hp, 0.05 hp/1000 gal	ICARUS	DELTA-T98	GARRETT	SS
A-608	Aerobic Lagoon Agitators	AGITATOR	SURFACE-AERATOR	Twister Surface Aerators, 50 HP ea	VENDOR	MERRICK98	GARRETT	CS
A-630	Recycled Water Tank Agitator	AGITATOR	FIXED-PROP	5 hp, 50 rpm,	VENDOR	DELTA-T98	GARRETT	CS
C-601	Lignin Wet Cake Screw	CONVEYOR	SCREW	14" Dia X 100' Long	ICARUS	DELTA-T98	GARRETT	CS
C-614	Aerobic Sludge Screw	CONVEYOR	SCREW	9" Dia X 25' Long	ICARUS	DELTA-T98	GARRETT	CS
H-602	Anaerobic Digestor Feed Cooler	HEATX	SHELL-TUBE	TEMA BES Type, Floating Head	ICARUS	DELTA-T98	VENDOR	SS316;CS
M-604	Nutrient Feed System	MISCELLANEOUS	PACKAGE	5 Tanks and Pumps	VENDOR	VENDOR		CS
M-606	Biogas Emergency Flare	MISCELLANEOUS	MISCELLANEOUS	Flare and Pilot	VENDOR	VENDOR	DEFAULT	SS
M-612	Filter Precoat System	MISCELLANEOUS	MISCELLANEOUS	Tank, Agitator, Pump	MERRICK98			CS
P-602	Anaerobic Reactor Feed Pump	PUMP	CENTRIFUGAL	876 gpm, 150 ft head	ICARUS	DELTA-T98	GARRETT	CS
P-606	Aerobic Digestor Feed Pump	PUMP	CENTRIFUGAL	830 gpm, 150 ft head	ICARUS	DELTA-T98	GARRETT	CS
P-608	Aerobic Sludge Recycle Pump	PUMP	SLURRY	2.5 gpm, 150 ft head	ICARUS	DELTA-T98	GARRETT	SS316
P-610	Aerobic Sludge Pump	PUMP	SLURRY	25.3 gpm, 150 ft head	ICARUS	DELTA-T98	GARRETT	SS316
P-611	Aerobic Digestion Outlet Pump	PUMP	CENTRIFUGAL	828 gpm, 150' head	ICARUS	DELTA-T98	GARRETT	CS
P-614	Sludge Filtrate Recycle Pump	PUMP	CENTRIFUGAL	22 gpm, 150' head	ICARUS	DELTA-T98	GARRETT	CS
P-616	Treated Water Pump	PUMP	CENTRIFUGAL	803 gpm, 100 ft head	ICARUS	DELTA-T98	GARRETT	CS
P-630	Recycled Water Pump	PUMP	CENTRIFUGAL	790 gpm, 150 ft head	ICARUS	DELTA-T98	GARRETT	CS
S-600	Bar Screen	SEPARATOR	SCREEN	0.5" Mech. cleaned Screen	CH2MHL91	DELTA-T98	ASSUMED	CS
S-601	Beer Column Bottoms Centrifuge	S/L SEPARATOR	CENTRIFUGE	36" X 12", 550 HP EACH	VENDOR	DELTA-T98	GARRETT	316SS
S-614	Belt Filter Press	S/L SEPARATOR	FILTER-PRESS	BELT THICKNESS	VENDOR	VENDOR	VENDOR	304SS;BUNA N
T-602	Equalization Basin	TANK	FLAT-BTM-STORAGE	377516 gal, Residence time 7.2 hr,	VENDOR	VENDOR	GARRETT	CONCRETE
T-606	Anaerobic Digestor	TANK	FLAT-BTM-STORAGE	810250 gal each, space velocity 12g COD/L/DAY	VENDOR	VENDOR	GARRETT	EPOXY-LINED
T-608	Aerobic Digestor	REACTOR	LINED-PIT	19500000 gal, 16.3 day residence time	MERRICK98	MERRICK98		POLYMER LINED
T-610	Clarifier	SEPARATOR	CLARIFIER	195289 gal, Residence time 3.9 hr.	VENDOR	VENDOR	GARRETT	CONCRETE
T-630	Recycled Water Tank	TANK	FLAT-BTM-STORAGE	13218 gal, Residence time 20 min, 2.5 psig	VENDOR	DELTA-T98	VENDOR	CS

Note: Eq. Sizes Listed are for a Base Case and may have been scaled up or down in the final cost estimation.

Eguip. No.	Equipment Name	Eq. Category	Eq. Type	Equipment Description	Cost Basis	Install. Fact. Basis	Scale Fact. Basis	Material Const.
PFD-P100-A701								
A-701	Denaturant In-line Mixer	MIXER	STATIC	Static Mixer, total flow 341 gpm	ICARUS	DELTA-T98	ICARUS	SS304
P-701	Ethanol Product Pump	PUMP	CENTRIFUGAL	324 gpm, 112 ft head	ICARUS	DELTA-T98	GARRETT	CS
P-703	Sulfuric Acid Pump	PUMP	CENTRIFUGAL	215 gpm, 150 ft head	ICARUS	DELTA-T98	GARRETT	SS316
P-704	Firewater Pump	PUMP	CENTRIFUGAL	2500 gpm, 50 ft head	ICARUS	DELTA-T98	GARRETT	CS
P-706	Ammonia Pump	PUMP	CENTRIFUGAL	8.5 gpm, 22 ft head	ICARUS	DELTA-T98	GARRETT	CS
P-707	Antifoam Store Pump	PUMP	CENTRIFUGAL	1 gpm, 92 ft head	ICARUS	DELTA-T98	GARRETT	CS
P-708	Diesel Pump	PUMP	CENTRIFUGAL	30 gpm, 150 ft head	ICARUS	DELTA-T98		CS
P-710	Gasoline Pump	PUMP	CENTRIFUGAL	17 gpm, 200 ft head	ICARUS	DELTA-T98	GARRETT	CS
P-720	CSL Pump	PUMP	CENTRIFUGAL	431 gpm, 150 ft head	ICARUS	DELTA-T98	GARRETT	CS
T-701	Ethanol Product Storage Tank	TANK	FLAT-BTM-STORAGE	604,133 gal, 7 day res time total, 90% wv, 51' dia x 40' high, atmospheric	ICARUS	DELTA-T98	GARRETT	A285C
T-703	Sulfuric Acid Storage Tank	TANK	FLAT-BTM-STORAGE	18697 gal, 120 hr res time, 90% wv, 12' dia x 22' high, atmospheric	ICARUS	ICARUS	GARRETT	SS316
T-704	Firewater Storage Tank	TANK	FLAT-BTM-STORAGE	600,000 gal, 4 hr res time, 51' dia x 40' high, atmospheric	ICARUS	DELTA-T98	GARRETT	A285C
T-706	Ammonia Storage Tank	TANK	HORIZONTAL-STORAGE	57,500 gal, 4.2 day res time (1.5 x rail car), 13' dia x 60' long, 260 psig	ICARUS	DELTA-T98	GARRETT	A515
T-707	Antifoam Storage Tank	TANK	FLAT-BTM-STORAGE	12,000 gal, 7 day res time, 90% wv, 10.5' dia x 18.5' high, atmospheric	ICARUS	DELTA-T98	GARRETT	A285C
T-708	Diesel Storage Tank	TANK	FLAT-BTM-STORAGE	10,667 gal, 120 hr res time, 90% wv, 10' dia x 18.2' high, atmospheric	ICARUS	DELTA-T98		A285C
T-710	Gasoline Storage Tank	TANK	FLAT-BTM-STORAGE	63,593 gal, 168 hr res time, 90% wv, 19' dia x 32' high, atmospheric	ICARUS	DELTA-T98	GARRETT	A285C
T-720	CSL Storage Tank	TANK	FLAT-BTM-STORAGE	71,918 gal, 120 hr res time, 90% wv, 20' dia x 32' high, atmospheric	ICARUS	ICARUS	GARRETT	SS304
PFD-P100-801,2,3,4								
H-811	BFW Preheater	HEATX	SHELL-TUBE	Floating Head, 500 SF	ICARUS	DELTA-T98	GARRETT	SS304
M-801	Solid Feed Rotary Dryer	DRYER	ROTARY-DRUM	Rotary Drum Dryer	VENDOR	CHEMSYST94	GARRETT	
M-803	Fluidized Bed Combustion Reactor	MISCELLANEOUS	MISCELLANEOUS	900 to 1250 psig/950F Circ. Fluid Bed	VENDOR	DELTA-T98	VENDOR	CS
M-804	Combustion Gas Baghouse	SEPARATOR	FABRIC-FILTER	Pulse Shaker, 545000 cfm, 135,135 SF	VENDOR	VENDOR	MULTI-UNIT	A285C;FABRIC
M-811	Turbine/Generator	GENERATOR	STEAM-TURBINE	52-61 MW; 281000 KG/HR STEAM	VENDOR	DELTA-T98	VENDOR	
M-820	Hot Process Water Softener System	MISCELLANEOUS	PACKAGE	1000 gpm flow, 24" dia softener. Includes filters, chemical feeders, piping, valves	RICHARDSON	NREL-ESTM	MULTI-UNIT	
M-830	Hydrazine Addition Pkg.	MISCELLANEOUS	PACKAGE	150 gal tank, agitator, 2 metering pumps	CHEMSYST94	CHEMSYST94	DEFAULT	
M-832	Ammonia Addition Pkg	MISCELLANEOUS	PACKAGE	150 gal tank, agitator, 2 metering pumps	CHEMSYST94	CHEMSYST94	DEFAULT	
M-834	Phosphate Addition Pkg.	MISCELLANEOUS	PACKAGE	150 gal tank, agitator, 2 metering pumps	CHEMSYST94	CHEMSYST94	DEFAULT	
P-804	Condensate Pump	PUMP	CENTRIFUGAL	272 gpm 150' head	ICARUS	DELTA-T98	GARRETT	SS316
P-811	Turbine Condensate Pump	PUMP	CENTRIFUGAL	175 gpm, 150 ft head.	ICARUS	DELTA-T98	GARRETT	SS304
P-824	Deaerator Feed Pump	PUMP	CENTRIFUGAL	650 gpm, 115 ft head.	ICARUS	DELTA-T98	GARRETT	SS304
P-826	BFW Pump	PUMP	CENTRIFUGAL	500 gpm, 2740 ft head.	VENDOR	DELTA-T98	GARRETT	SS316
P-828	Blowdown Pump	PUMP	CENTRIFUGAL	29 gpm, 150 ' head	ICARUS	DELTA-T98	GARRETT	CS
P-830	Hydrazine Transfer Pump	PUMP	CENTRIFUGAL	5 gpm, 75 ft head	DELTA-T98	DELTA-T98	GARRETT	CS
T-804	Condensate Collection Tank	TANK	VERTICAL-VESSEL	1600 gal, Residence time 1.5 minutes, atmospheric	ICARUS	DELTA-T98	GARRETT	A285C
T-824	Condensate Surge Drum	TANK	HORIZONTAL-VESSEL	11,400 gal, 24' x 9'dia, 15psig, Residence time 11 min.	ICARUS	DELTA-T98	GARRETT	SS304
T-826	Deaerator	TANK	HORIZONTAL-VESSEL	18,170 gal hold tank, 150 psig design pressure, 10 min residence time	VENDOR	CHEMSYST94	GARRETT	CS;SS316
T-828	Blowdown Flash Drum	TANK	HORIZONTAL-VESSEL	424 gal, 4.5' x 4'dia, 15 psig	ICARUS	DELTA-T98	GARRETT	CS
T-830	Hydrazine Drum	TANK	VERTICAL-VESSEL	260 gal, 4.9' x 3'dia., 10psig	ICARUS	DELTA-T98	GARRETT	SS316
PFD-P100-A901,2,3								
M-902	Cooling Tower System	COOLING-TOWER	INDUCED-DRAFT	71000 gpm, 147.8 x E6 kcal/hr, 5 cell	DELTA-T98	DELTA-T98	GARRETT	FIBERGLASS
M-904	Plant Air Compressor	COMPRESSOR	RECIPROCATING	450 cfm, 125 psig outlet	ICARUS	DELTA-T98	GARRETT	CS
M-908	Chilled Water Package	COMPRESSOR	CENTRIFUGAL	2000 tons each, 1200 kw	ICARUS	DELTA-T98	GARRETT	CS
M-910	CIP System	MISCELLANEOUS	MISCELLANEOUS	Designed by Delta-T. Same cost as sum of previous units.	DELTA-T98	DELTA-T98	NREL-ESTM	CS
P-902	Cooling Water Pumps	PUMP	CENTRIFUGAL	41000 gpm, 70 ft head.	ICARUS	DELTA-T98	GARRETT	CS
P-912	Make-up Water Pump	PUMP	CENTRIFUGAL	1083 gpm, 75 ft. head	ICARUS	DELTA-T98	GARRETT	CS
P-914	Process Water Circulating Pump	PUMP	CENTRIFUGAL	1199 gpm ea, 75 ft. head	ICARUS	DELTA-T98	GARRETT	CS
S-904	Instrument Air Dryer	DRYER	PACKAGE	400 SCFM Air Dryer, -40F Dewpoint	RICHARDSON	DELTA-T98	DEFAULT	CS
T-904	Plant Air Receiver	TANK	HORIZONTAL-VESSEL	900 gal., 200 psig	ICARUS	DELTA-T98	GARRETT	CS
T-914	Process Water Tank	TANK	FLAT-BTM-STORAGE	756000 gal. 8 hr res time	ICARUS	DELTA-T98	GARRETT	CS

Note: Eq. Sizes Listed are for a Base Case and may have been scaled up or down in the final cost estimation.

Appendix B

Individual Equipment Costs Summary

Individual Equipment Cost Summary

Equip No.	No. Req'd	No. Spares	Equip Name	Scaled On	Size Ratio (Base/ Current)	Original Equip Cost (per unit)	Base Year	Total Original Equip Cost (Req'd & Spare) in Base Year	Scaling Exponent	Scaled Cost in Base Year	Installation Factor	Installed Cost in Base Year	Installed Cost in 1997$
C-101	3	1	Hopper Feeder	Flow	1.00	$8,000	1999	$32,000	0.76	$32,000	1.3	$41,600	$40,679
C-102	1		Transfer Belt Conveyor	Flow	1.00	$78,120	1999	$78,120	0.76	$78,120	1.3	$101,556	$99,307
C-103	1		Radial Stacker Conveyor	Flow	1.00	$200,100	1999	$200,100	0.76	$200,100	1.3	$260,130	$254,369
C-104	2		Reclaim Hopper Feeder	Flow	1.00	$8,000	1999	$16,000	0.76	$16,000	1.3	$20,800	$20,339
C-105	1		Reclaim Hopper Conveyor	Flow	1.00	$172,976	1999	$172,976	0.76	$172,976	1.3	$224,869	$219,889
C-106	4		Chip Washer Feeder	Flow	1.00	$5,500	1999	$22,000	0.76	$22,000	1.3	$28,600	$27,967
C-107	2		Scalper Screen Feeder	Flow	1.00	$13,392	1998	$26,784	0.76	$26,784	1.3	$34,819	$34,429
C-108	1		Pretreatment Feeder	Flow	1.00	$95,255	1998	$95,255	0.76	$95,255	1.3	$123,832	$122,445
M-101	3	1	Hydraulic Truck Dump with Scale	Flow	1.00	$80,000	1998	$320,000	0.6	$320,000	1.3	$416,000	$411,342
M-103	2		Front End Loaders	None		$156,000	1998	$312,000		$312,000	1	$312,000	$308,506
M-104	1		Disk Refiner System	Flow	1.00	$382,500	1997	$382,500	0.62	$382,500	1.3	$497,250	$497,250
S-101	1		Magnetic Separator	Flow	1.00	$13,863	1998	$13,863	0.6	$13,863	1.3	$18,022	$17,820
S-102	2		Scalper Screener	Flow	1.00	$29,554	1998	$59,108	0.75	$59,108	1.3	$76,840	$75,980
S-103	1		Chip Thickness Screen	Flow	1.00	$218,699	1998	$218,699	0.75	$218,699	1.3	$284,309	$281,125
T-101	3	1	Dump Hopper	Flow	1.00	$28,327	1998	$113,308	0.71	$113,308	1.4	$158,631	$156,855
T-102	2		Reclaim Hopper	Flow	1.00	$28,327	1998	$56,654	0.51	$56,654	1.4	$79,316	$78,427
T-103	4		Washing/Refining Surge Bin	Flow	1.00	$36,103	1998	$144,412	0.51	$144,412	1.4	$202,177	$199,913
W-101	4		Chip Washer System	Flow	1.00	$400,000	1998	$1,600,000	0.6	$1,600,000	1.3	$2,080,000	$2,056,710
A100							Subtotal*	$3,863,779		$3,863,779	1.28	$4,960,750	$4,903,353

*Sections are subtotaled and an average "Installation Factor" is back calculated for the section.

Individual Equipment Cost Summary

Equip No.	No. Req'd	No. Spares	Equip Name	Scaled On	Size Ratio (Base/ Current)	Original Equip Cost (per unit)	Base Year	Total Original Equip Cost (Req'd & Spare) in Base Year	Scaling Exponent	Scaled Cost in Base Year	Installation Factor	Installed Cost in Base Year	Installed Cost in 1997$
A-201	1		In-line Sulfuric Acid Mixer	Flow	0.88	$1,900	1997	$1,900	0.48	$1,785	1	$1,785	$1,785
A-202	1		In-line NH3 Mixer	Flow	1.25	$1,500	1997	$1,500	0.48	$1,669	1	$1,669	$1,669
A-209	1		Overliming Tank Agitator	Flow	1.30	$19,800	1997	$19,800	0.51	$22,663	1.3	$29,462	$29,462
A-224	1		Reacidification Tank Agitator	Flow	1.30	$65,200	1997	$65,200	0.51	$74,629	1.2	$89,555	$89,555
A-232	1		Reslurrying Tank Agitator	Flow	1.01	$36,000	1997	$36,000	0.51	$36,200	1.2	$43,441	$43,441
A-235	1		In-line Acidification Mixer	Flow	1.30	$2,600	1997	$2,600	0.48	$2,953	1	$2,953	$2,953
C-201	1		Hydrolyzate Screw Conveyor	Flow	1.00	$59,400	1997	$59,400	0.78	$59,356	1.3	$77,163	$77,163
C-202	4		Wash Solids Screw Conveyor	Flow	0.75	$23,700	1997	$94,800	1	$70,920	1.3	$92,196	$92,196
C-225	1		Lime Solids Feeder	None		$3,900	1997	$3,900		$3,900	1.3	$5,070	$5,070
H-200	1		Hydrolyzate Cooler	Area	1.31	$45,000	1997	$45,000	0.51	$51,558	2.1	$108,271	$108,271
H-201	2	1	Beer Column Feed Economizer	Area	1.02	$132,800	1997	$398,400	0.68	$403,256	2.1	$846,837	$846,837
M-202	1		Prehydrolysis Reactor System	Flow	1.00	$12,461,841	1998	$12,461,841	0.78	$12,462,882	1.5	$18,694,322	$18,485,000
P-201	1	1	Sulfuric Acid Pump	Flow	1.13	$4,800	1997	$9,600	0.79	$10,598	2.8	$29,673	$29,673
P-209	1	1	Overlimed Hydrolyzate Pump	Flow	1.30	$10,700	1997	$21,400	0.79	$26,380	2.8	$73,863	$73,863
P-222	1	1	Filtered Hydrolyzate Pump	Flow	1.33	$10,800	1997	$21,600	0.79	$27,057	2.8	$75,760	$75,760
P-223	1		Lime Unloading Blower	Flow	1.31	$47,600	1998	$47,600	0.5	$54,382	1.4	$76,134	$75,282
P-224	2	1	Fermentation Feed Pump	Flow	1.01	$61,368	1998	$184,104	0.7	$185,512	2.8	$519,435	$513,618
P-225	1	1	ISEP Elution Pump	Flow	1.25	$7,900	1997	$15,800	0.79	$18,826	2.8	$52,714	$52,714
P-226	1	1	ISEP Reload Pump	Flow	1.30	$8,700	1997	$17,400	0.79	$21,450	2.8	$60,061	$60,061
P-227	1	1	ISEP Hydrolyzate Feed Pump	Flow	1.31	$10,700	1997	$21,400	0.79	$26,456	2.8	$74,078	$74,078
P-239	1	1	Reacidified Liquor Pump	Flow	1.30	$10,800	1997	$21,600	0.79	$26,627	2.8	$74,555	$74,555
S-202	8		Pre-IX Belt Filter Press	Feed Solids	1.03	$200,000	1998	$1,600,000	0.39	$1,619,536	1.4	$2,267,351	$2,241,963
S-221	1		ISEP	Flow	1.00	$2,058,000	1997	$2,058,000	0.33	$2,056,875	1.2	$2,468,250	$2,468,250
S-222	1		Hydroclone & Rotary Drum Filter	Flow	0.47	$165,000	1998	$165,000	0.39	$122,738	1.4	$171,833	$169,909
S-227	1		LimeDust Vent Baghouse	Flow	1.30	$32,200	1997	$32,200	1	$41,952	1.5	$62,928	$62,928
T-201	1		Sulfuric Acid Storage	Flow	1.13	$5,760	1996	$5,760	0.71	$6,295	1.4	$8,813	$8,870
T-203	1		Blowdown Tank	Flow	1.00	$64,100	1997	$64,100	0.93	$64,048	1.2	$76,857	$76,857
T-209	1		Overliming Tank	Flow	1.30	$71,000	1997	$71,000	0.71	$85,687	1.4	$119,962	$119,962
T-220	1		Lime Storage Bin	Flow	1.30	$69,200	1997	$69,200	0.46	$78,155	1.3	$101,602	$101,602
T-224	1		Reacidification Tank	Flow	1.30	$147,800	1997	$147,800	0.51	$169,174	1.2	$203,009	$203,009
T-232	1		Slurrying Tank	Flow	1.01	$44,800	1997	$44,800	0.71	$45,148	1.2	$54,177	$54,177
A200							Subtotal*	$17,808,705		$17,878,668	1.49	$26,563,780	$26,320,534

*Sections are subtotaled and an average "Installation Factor" is back calculated for the section.

Individual Equipment Cost Summary

Equip No.	No. Req'd	No. Spares	Equip Name	Scaled On	Size Ratio (Base/ Current)	Original Equip Cost (per unit)	Base Year	Total Original Equip Cost (Req'd & Spare) in Base Year	Scaling Exponent	Scaled Cost in Base Year	Installation Factor	Installed Cost in Base Year	Installed Cost in 1997$
A-300	34		SSCF Fermentor Agitators			$19,676	1996	$668,984		$668,984	1.2	$802,781	$807,919
A-301	1		Seed Hold Tank Agitator	Flow	0.91	$12,551	1996	$12,551	0.51	$11,958	1.2	$14,350	$14,442
A-304	2		4th Seed Vessel Agitator	Flow	0.91	$11,700	1997	$23,400	0.51	$22,295	1.2	$26,754	$26,754
A-305	2		5th Seed Vessel Agitator	Flow	0.91	$10,340	1996	$20,680	0.51	$19,704	1.2	$23,644	$23,796
A-306	1		Beer Surge Tank Agitator	Flow	1.00	$10,100	1997	$10,100	0.51	$10,080	1.2	$12,096	$12,096
F-300	17		SSCF Fermentors	None		$493,391	1998	$8,387,647		$8,387,647	1.2	$10,065,176	$9,952,475
F-301	2		1st SSCF Seed Fermentor	None		$14,700	1997	$29,400		$29,400	2.8	$82,320	$82,320
F-302	2		2nd SSCF Seed Fermentor	None		$32,600	1997	$65,200		$65,200	2.8	$182,560	$182,560
F-303	2		3rd SSCF Seed Fermentor	None		$81,100	1997	$162,200		$162,200	2.8	$454,160	$454,160
F-304	2		4th SSCF Seed Fermentor	Flow	0.91	$39,500	1997	$79,000	0.93	$72,331	1.2	$86,798	$86,798
F-305	2		5th SSCF Seed Fermentor	Flow	0.91	$147,245	1998	$294,490	0.51	$280,587	1.2	$336,704	$332,934
H-300	17	1	Fermentation Cooler	Heat Duty	1.33	$4,000	1997	$72,000	0.78	$89,761	2.1	$188,499	$188,499
H-301	1		SSCF Seed Hydrolyzate Cooler	Area	0.91	$15,539	1998	$15,539	0.78	$14,414	2.1	$30,270	$29,931
H-302	3		SSCF Hydrolyzate Cooler	Area	0.98	$25,409	1998	$76,227	0.78	$75,201	2.1	$157,922	$156,154
H-304	1		4TH Seed Fermentor Coils	Heat Duty	0.92	$3,300	1997	$3,300	0.83	$3,066	1.2	$3,679	$3,679
H-305	1		5TH Seed Fermentor Coils	Heat Duty	0.92	$18,800	1997	$18,800	0.98	$17,234	1.2	$20,681	$20,681
P-300	17	1	SSCF Recirculation and Transfer Pump	Heat Duty	1.33	$8,000	1997	$144,000	0.79	$180,205	2.8	$504,574	$504,574
P-301	1	1	SSCF Seed Transfer Pump	Flow	0.91	$22,194	1998	$44,388	0.7	$41,537	1.4	$58,152	$57,501
P-302	2		Seed Transfer Pump	Flow	0.91	$54,088	1998	$108,176	0.7	$101,228	1.4	$141,720	$140,133
P-306	1	1	Beer Transfer Pump	Flow	1.00	$17,300	1997	$34,600	0.79	$34,493	2.8	$96,581	$96,581
T-301	1		SSCF Seed Hold Tank	Flow	0.91	$161,593	1998	$161,593	0.51	$153,964	1.2	$184,757	$182,688
T-306	1		Beer Storage Tank	Flow	1.00	$34,900	1997	$34,900	0.71	$34,803	1.2	$41,764	$41,764
A300							Subtotal*	$10,467,175		$10,476,292	1.29	$13,515,939	$13,398,435

*Sections are subtotaled and an average "Installation Factor" is back calculated for the section.

Individual Equipment Cost Summary

Equip No.	No. Req'd	No. Spares	Equip Name	Scaled On	Size Ratio (Base/ Current)	Original Equip Cost (per unit)	Base Year	Total Original Equip Cost (Req'd & Spare) in Base Year	Scaling Exponent	Scaled Cost in Base Year	Installation Factor	Installed Cost in Base Year	Installed Cost in 1997$
A-400	11		Cellulase Fermentor Agitators	None		$550,000	1998	$6,050,000		$6,050,000	1.2	$7,260,000	$7,178,709
F-400	11		Cellulase Fermentors	None		$179,952	1998	$1,979,472		$1,979,472	1	$1,979,472	$1,957,308
F-401	3		1st Cellulase Seed Fermentor	Flow	0.92	$22,500	1997	$67,500	0.93	$62,772	2	$125,545	$125,545
F-402	3		2nd Cellulase Seed Fermentor	Flow	0.92	$54,100	1997	$162,300	0.93	$150,933	2	$301,866	$301,866
F-403	3		3rd Cellulase Seed Fermentor	Flow	0.92	$282,100	1997	$846,300	0.93	$787,028	2	$1,574,055	$1,574,055
H-400	11		Cellulase Fermentation Cooler	Heat Duty	1.00	$34,400	1997	$378,400	0.78	$378,222	2.1	$794,266	$794,266
M-401	2	1	Fermentor Air Compressor Package	Flow	3.10	$596,342	1998	$1,789,026	0.34	$2,626,951	1.3	$3,415,036	$3,376,798
P-400	1	1	Cellulase Transfer Pump	Flow	0.97	$9,300	1997	$18,600	0.79	$18,118	2.8	$50,730	$50,730
P-401	1	1	Cellulase Seed Pump	Flow	0.92	$12,105	1998	$24,210	0.7	$22,922	1.2	$27,507	$27,199
P-405	1	1	Media Pump	Flow	0.99	$8,300	1997	$16,600	0.79	$16,469	2.8	$46,115	$46,115
P-420	1	1	Anti-foam Pump	Flow	1.00	$5,500	1997	$11,000	0.79	$10,997	2.8	$30,792	$30,792
T-405	1		Media-Prep Tank	Flow	0.99	$64,600	1997	$64,600	0.71	$64,143	1.2	$76,972	$76,972
T-420	1		Anti-foam Tank	Flow	1.00	$402	1998	$402	0.71	$402	1.2	$482	$477
A400							Subtotal*	$11,408,410		$12,168,430	1.29	$15,682,838	$15,540,831

*Sections are subtotaled and an average "Installation Factor" is back calculated for the section.

Individual Equipment Cost Summary

Equip No.	No. Req'd	No. Spares	Equip Name	Scaled On	Size Ratio (Base/ Current)	Original Equip Cost (per unit)	Base Year	Total Original Equip Cost (Req'd & Spare) in Base Year	Scaling Exponent	Scaled Cost in Base Year	Installation Factor	Installed Cost in Base Year	Installed Cost in 1997$
D-501	1		Beer Column	Deameter	0.94	$636,976	1996	$636,976	0.78	$604,672	2.1	$1,269,811	$1,277,938
D-502	1		Rectification Column	Flow	0.99	$525,800	1996	$525,800	0.78	$521,461	2.1	$1,095,069	$1,102,077
E-501	2		1st Effect Evaporation	Area	1.23	$544,595	1996	$1,089,190	0.68	$1,256,849	2.1	$2,639,383	$2,656,275
E-502	1		2nd Effect Evaporation	Area	1.23	$435,650	1996	$435,650	0.68	$502,710	2.1	$1,055,690	$1,062,446
E-503	2		3rd Effect Evaporation	Area	1.23	$435,650	1996	$871,300	0.68	$1,005,419	2.1	$2,111,380	$2,124,893
H-501	1		Beer Column Reboiler	Heat Duty	0.99	$158,374	1996	$158,374	0.68	$157,438	2.1	$330,619	$332,735
H-502	1		Rectification Column Reboiler	Heat Duty	0.99	$29,600	1997	$29,600	0.68	$29,355	2.1	$61,646	$61,646
H-504	1		Beer Column Condenser	Heat Duty	0.89	$29,544	1996	$29,544	0.68	$27,278	2.1	$57,283	$57,650
H-505	1		Rectification Column Condenser	Heat Duty	0.99	$86,174	1996	$86,174	0.68	$85,460	2.1	$179,466	$180,615
H-512	1	1	Beer Column Feed Interchange	Area	1.00	$19,040	1996	$38,080	0.68	$38,034	2.1	$79,872	$80,383
H-517	1	1	Evaporator Condenser	Heat Duty	1.18	$121,576	1996	$243,152	0.68	$271,888	2.1	$570,965	$574,620
M-503	1		Molecular Sieve (9 pieces)	Flow	0.91	$2,700,000	1998	$2,700,000	0.7	$2,519,007	1	$2,519,007	$2,490,801
P-501	1	1	Beer Column Bottoms Pump	Flow	1.00	$42,300	1997	$84,600	0.79	$84,767	2.8	$237,347	$237,347
P-503	1	1	Beer Column Reflux Pump	Heat Duty	0.89	$1,357	1998	$2,714	0.79	$2,474	2.8	$6,926	$6,849
P-504	1	1	Rectification Column Bottoms Pump	Flow	0.98	$4,916	1998	$9,832	0.79	$9,682	2.8	$27,109	$26,805
P-505	1	1	Rectification Column Reflux Pump	Heat Duty	0.99	$4,782	1998	$9,564	0.79	$9,471	2.8	$26,518	$26,221
P-511	2	1	1st Effect Pump	Flow	0.97	$19,700	1997	$59,100	0.79	$57,534	2.8	$161,095	$161,095
P-512	1	1	2nd Effect Pump	Flow	0.83	$13,900	1997	$27,800	0.79	$24,082	2.8	$67,430	$67,430
P-513	2	1	3rd Effect Pump	Flow	0.51	$8,000	1997	$24,000	0.79	$14,049	2.8	$39,337	$39,337
P-514	1	1	Evaporator Condensate Pump	Flow	1.18	$12,300	1997	$24,600	0.79	$27,943	2.8	$78,239	$78,239
P-515	1		Scrubber Bottoms Pump	Flow	0.88	$2,793	1998	$2,793	0.79	$2,529	2.8	$7,082	$7,003
T-503	1		Beer Column Relfux Drum	Heat Duty	0.89	$11,900	1997	$11,900	0.93	$10,669	2.1	$22,406	$22,406
T-505	1		Rectification Column Reflux Drum	Heat Duty	0.99	$45,600	1997	$45,600	0.72	$45,194	2.1	$94,908	$94,908
T-512	1		Vent Scrubber	Flow	1.00	$99,000	1998	$99,000	0.78	$98,640	2.1	$207,145	$204,825
A500							Subtotal*	$7,245,343		$7,406,605	1.75	$12,945,735	$12,974,545

*Sections are subtotaled and an average "Installation Factor" is back calculated for the section.

Individual Equipment Cost Summary

Equip No.	No. Req'd	No. Spares	Equip Name	Scaled On	Size Ratio (Base/ Current)	Original Equip Cost (per unit)	Base Year	Total Original Equip Cost (Req'd & Spare) in Base Year	Scaling Exponent	Scaled Cost in Base Year	Installation Factor	Installed Cost in Base Year	Installed Cost in 1997$
A-602	1		Equalization Basin Agitator	Flow	0.95	$28,400	1997	$28,400	0.51	$27,716	1.2	$33,259	$33,259
A-606	4		Anaerobic Agitator	Volume	1.02	$30,300	1997	$121,200	0.51	$122,516	1.2	$147,019	$147,019
A-608	16		Aerobic Lagoon Agitators	Power	1.02	$31,250	1998	$500,000	0.51	$505,650	1.4	$707,910	$699,983
A-630	1		Recycled Water Tank Agitator	Flow	0.95	$5,963	1998	$5,963	0.51	$5,819	1.3	$7,565	$7,480
C-601	1		Lignin Wet Cake Screw	Flow	0.99	$31,700	1997	$31,700	0.78	$31,470	1.4	$44,058	$44,058
C-614	1		Aerobic Sludge Screw	Flow	0.94	$5,700	1997	$5,700	0.78	$5,424	1.4	$7,594	$7,594
H-602	1		Anaerobic Digestor Feed Cooler	Area	0.98	$128,600	1997	$128,600	0.74	$126,409	2.1	$265,459	$265,459
M-604	1		Nutrient Feed System	None		$31,400	1998	$31,400		$31,400	2.58	$81,012	$80,105
M-606	1		Biogas Emergency Flare	Flow	1.02	$20,739	1998	$20,739	0.6	$21,028	1.68	$35,326	$34,931
M-612	1		Filter Precoat System	None		$3,000	1998	$3,000		$3,000	1.4	$4,200	$4,153
P-602	1	1	Anaerobic Reactor Feed Pump	Flow	0.95	$11,400	1997	$22,800	0.79	$21,955	2.8	$61,474	$61,474
P-606	1	1	Aerobic Digestor Feed Pump	Flow	0.95	$10,700	1997	$21,400	0.79	$20,592	2.8	$57,657	$57,657
P-608	1		Aerobic Sludge Recycle Pump	Flow	0.94	$11,100	1997	$11,100	0.79	$10,574	1.4	$14,804	$14,804
P-610	1		Aerobic Sludge Pump	Flow	0.94	$11,100	1997	$11,100	0.79	$10,574	1.4	$14,804	$14,804
P-611	1	1	Aerobic Digestion Outlet Pump	Flow	0.95	$10,700	1997	$21,400	0.79	$20,571	2.8	$57,599	$57,599
P-614	1	1	Sludge Filtrate Recycle Pump	Flow	0.94	$6,100	1997	$12,200	0.79	$11,625	2.8	$32,551	$32,551
P-616	1	1	Treated Water Pump	Flow	0.95	$10,600	1997	$21,200	0.79	$20,385	2.8	$57,078	$57,078
P-630	1	1	Recycled Water Pump	Flow	0.95	$10,600	1997	$21,200	0.79	$20,413	2.8	$57,156	$57,156
S-600	1		Bar Screen	Flow	0.95	$117,818	1991	$117,818	0.3	$116,140	1.2	$139,368	$148,180
S-601	3		Beer Column Bottoms Centrifuge	Flow	0.96	$659,550	1998	$1,978,650	0.6	$1,928,354	1.2	$2,314,025	$2,288,115
S-614	1		Belt Filter Press	COD	1.02	$650,223	1998	$650,223	0.72	$660,062	1.8	$1,188,111	$1,174,807
T-602	1		Equalization Basin	Flow	0.95	$350,800	1998	$350,800	0.51	$342,350	1.42	$486,137	$480,693
T-606	4		Anaerobic Digestor	Volume	1.02	$881,081	1998	$3,524,324	0.51	$3,562,594	1.04	$3,705,098	$3,663,612
T-608	1		Aerobic Digestor	Volume	0.95	$635,173	1998	$635,173	1	$606,356	1	$606,356	$599,566
T-610	1		Clarifier	Flow	0.95	$174,385	1998	$174,385	0.51	$170,104	1.96	$333,403	$329,670
T-630	1		Recycled Water Tank	Flow	0.95	$14,515	1998	$14,515	0.745	$14,006	1.4	$19,609	$19,389
A600							Subtotal*	$8,464,990		$8,417,087	1.24	$10,478,632	$10,381,196

*Sections are subtotaled and an average "Installation Factor" is back calculated for the section.

Individual Equipment Cost Summary

Equip No.	No. Req'd	No. Spares	Equip Name	Scaled On	Size Ratio (Base/ Current)	Original Equip Cost (per unit)	Base Year	Total Original Equip Cost (Req'd & Spare) in Base Year	Scaling Exponent	Scaled Cost in Base Year	Installation Factor	Installed Cost in Base Year	Installed Cost in 1997$
A-701	1		Denaturant In-line Mixer	Flow	1.00	$1,900	1997	$1,900	0.48	$1,899	1	$1,899	$1,899
P-701	2	1	Ethanol Product Pump	Flow	1.00	$7,500	1997	$22,500	0.79	$22,508	2.8	$63,022	$63,022
P-703	1	1	Sulfuric Acid Pump	Flow	1.13	$8,000	1997	$16,000	0.79	$17,663	2.8	$49,456	$49,456
P-704	1	1	Firewater Pump	Flow	1.00	$18,400	1997	$36,800	0.79	$36,811	2.8	$103,072	$103,072
P-706	1	1	Ammonia Pump	Flow	1.20	$5,000	1997	$10,000	0.79	$11,581	2.8	$32,427	$32,427
P-707	1	1	Antifoam Store Pump	Flow	1.00	$5,700	1997	$11,400	0.79	$11,397	2.8	$31,912	$31,912
P-708	1	1	Diesel Pump	Flow	1.00	$6,100	1997	$12,200	0.79	$12,201	2.8	$34,162	$34,162
P-710	1	1	Gasoline Pump	Flow	0.98	$4,500	1997	$9,000	0.79	$8,833	2.8	$24,732	$24,732
P-720	1	1	CSL Pump	Flow	0.97	$8,800	1997	$17,600	0.79	$17,178	2.8	$48,100	$48,100
T-701	2		Ethanol Product Storage Tank	Flow	1.00	$165,800	1997	$331,600	0.51	$331,675	1.4	$464,345	$464,345
T-703	1		Sulfuric Acid Storage Tank	Flow	1.13	$42,500	1997	$42,500	0.51	$45,301	1.2	$54,361	$54,361
T-704	1		Firewater Storage Tank	Flow	1.00	$166,100	1997	$166,100	0.51	$166,146	1.4	$232,604	$232,604
T-706	1		Ammonia Storage Tank	Flow	1.20	$287,300	1997	$287,300	0.72	$328,423	1.4	$459,792	$459,792
T-707	1		Antifoam Storage Tank	Flow	1.00	$14,400	1997	$14,400	0.71	$14,397	1.4	$20,155	$20,155
T-708	1		Diesel Storage Tank	Flow	1.00	$14,400	1997	$14,400	0.51	$14,400	1.4	$20,161	$20,161
T-710	1		Gasoline Storage Tank	Flow	0.98	$43,500	1997	$43,500	0.51	$42,977	1.4	$60,167	$60,167
T-720	1		CSL Storage Tank	Flow	0.97	$88,100	1997	$88,100	0.79	$85,990	1.4	$120,386	$120,386
A700							Subtotal*	$1,125,300		$1,169,380	1.56	$1,820,753	$1,820,753

*Sections are subtotaled and an average "Installation Factor" is back calculated for the section.

Individual Equipment Cost Summary

Equip No.	No. Req'd	No. Spares	Equip Name	Scaled On	Size Ratio (Base/ Current)	Original Equip Cost (per unit)	Base Year	Total Original Equip Cost (Req'd & Spare) in Base Year	Scaling Exponent	Scaled Cost in Base Year	Installation Factor	Installed Cost in Base Year	Installed Cost in 1997$
H-811	1		BFW Preheater	Area	1.03	$58,400	1997	$58,400	0.68	$59,609	2.1	$125,178	$125,178
M-801	1		Solid Feed Rotary Dryer	Flow	1.00	$1,620,000	1998	$1,620,000	0.45	$1,621,871	1.6	$2,594,994	$2,565,938
M-803	1		Fluidized Bed Combustion Reactor	Flow	0.69	$24,900,000	1998	$24,900,000	0.75	$18,835,267	1.3	$24,485,847	$24,211,676
M-804	1		Combustion Gas Baghouse	Flow	0.22	$2,536,300	1998	$2,536,300	0.58	$1,061,116	1.5	$1,591,674	$1,573,852
M-811	1		Turbine/Generator	Flow	0.84	$10,000,000	1998	$10,000,000	0.71	$8,809,671	1.5	$13,214,507	$13,066,543
M-820	1		Hot Process Water Softener System	Flow	0.96	$1,381,300	1999	$1,381,300	0.82	$1,334,444	1.3	$1,734,777	$1,696,358
M-830	1		Hydrazine Addition Pkg.	Flow	1.06	$19,000	1994	$19,000	0.6	$19,645	1	$19,645	$20,501
M-832	1		Ammonia Addition Pkg	Flow	1.06	$19,000	1994	$19,000	0.6	$19,645	1	$19,645	$20,501
M-834	1		Phosphate Addition Pkg.	Flow	1.06	$19,000	1994	$19,000	0.6	$19,645	1	$19,645	$20,501
P-804	2		Condensate Pump	Flow	2.36	$7,100	1997	$14,200	0.79	$28,010	2.8	$78,427	$78,427
P-811	2		Turbine Condensate Pump	Flow	1.40	$7,800	1997	$15,600	0.79	$20,401	2.8	$57,123	$57,123
P-824	2		Deaerator Feed Pump	Flow	0.74	$9,500	1997	$19,000	0.79	$14,940	2.8	$41,833	$41,833
P-826	5		BFW Pump	Flow	0.43	$52,501	1998	$262,505	0.79	$134,639	2.8	$376,988	$372,767
P-828	2		Blowdown Pump	Flow	1.10	$5,100	1997	$10,200	0.79	$10,999	2.8	$30,796	$30,796
P-830	1		Hydrazine Transfer Pump	Flow	1.06	$5,500	1997	$5,500	0.79	$5,747	2.8	$16,091	$16,091
T-804	1		Condensate Collection Tank	Flow	0.63	$7,100	1997	$7,100	0.71	$5,141	1.4	$7,198	$7,198
T-824	1		Condensate Surge Drum	Flow	0.97	$49,600	1997	$49,600	0.72	$48,668	1.7	$82,736	$82,736
T-826	1		Deaerator	Flow	0.91	$165,000	1998	$165,000	0.72	$154,281	2.8	$431,986	$427,149
T-828	1		Blowdown Flash Drum	Flow	1.11	$9,200	1997	$9,200	0.72	$9,908	2.8	$27,743	$27,743
T-830	1		Hydrazine Drum	Flow	1.06	$12,400	1997	$12,400	0.93	$13,058	1.7	$22,199	$22,199
A800							Subtotal*	$41,123,305		$32,226,704	1.40	$44,979,031	$44,465,109

*Sections are subtotaled and an average "Installation Factor" is back calculated for the section.

Individual Equipment Cost Summary

Equip No.	No. Req'd	No. Spares	Equip Name	Scaled On	Size Ratio (Base/ Current)	Original Equip Cost (per unit)	Base Year	Total Original Equip Cost (Req'd & Spare) in Base Year	Scaling Exponent	Scaled Cost in Base Year	Installation Factor	Installed Cost in Base Year	Installed Cost in 1997$
M-902	1		Cooling Tower System	Flow	0.79	$1,659,000	1998	$1,659,000	0.78	$1,374,359	1.2	$1,649,231	$1,630,764
M-904	2	1	Plant Air Compressor	Flow	1.00	$60,100	1997	$180,300	0.34	$180,299	1.3	$234,389	$234,389
M-908	3		Chilled Water Package	Flow	0.96	$380,000	1997	$1,140,000	0.8	$1,104,036	1.2	$1,324,844	$1,324,844
M-910	1		CIP System	Flow	1.00	$95,000	1995	$95,000	0.6	$95,036	1.2	$114,043	$114,954
P-902	1	1	Cooling Water Pumps	Flow	0.76	$332,300	1997	$664,600	0.79	$533,245	2.8	$1,493,085	$1,493,085
P-912	1	1	Make-up Water Pump	Flow	0.76	$10,800	1997	$21,600	0.79	$17,392	2.8	$48,698	$48,698
P-914	2	1	Process Water Circulating Pump	Flow	0.78	$11,100	1997	$33,300	0.79	$27,307	2.8	$76,460	$76,460
S-904	1	1	Instrument Air Dryer	Flow	1.00	$15,498	1999	$30,996	0.6	$30,996	1.3	$40,294	$39,402
T-904	1		Plant Air Receiver	Flow	1.00	$13,000	1997	$13,000	0.72	$13,000	1.3	$16,900	$16,900
T-914	1		Process Water Tank	Flow	0.78	$195,500	1997	$195,500	0.51	$171,996	1.4	$240,795	$240,795
							Subtotal*	$4,033,296		$3,547,667	1.40	$5,238,739	$5,220,291
					Total Equipment Cost			$105,540,303		$97,154,612	1.40	$136,186,198	$135,025,047

*Sections are subtotaled and an average "Installation Factor" is back calculated for the section.

Appendix C

Chemical Costs and Sources

Raw Material	Cost ($/lb)	Reference
H2SO4	$0.0125	$25/ton -- tanks, works, Chemical Marketing Reporter 2 Nov 98
Lime	$0.035	$70/ton -- bulk, fob plants, Chemical Marketing Reporter 2 Nov 98
NH3	$0.0875	$175/ton -- anhydrous, fertilizer grade, wholesale tanks, Delivered to Midwest Terminals, Chemical Marketing Reporter 2 Nov 98
Corn Steep Liq	$0.075	Analysis of CSL market -- Ruth, M. Report to Process Engineering Team, 5 June 1998
Nutrients	$0.124	Schell, 1991. P. 48
Ammonium Sulfate	$0.0225	$45/ton -- standard commercial, fob works, Chemical Marketing Reporter 2 Nov 98
Antifoam	$0.249	Corn Oil -- crude, tank cars, fob Decatur, US Dept. of Agriculture, Agricultural Statistics 1998 Table 3-56
Gasoline	$0.0898	$0.515 / gal -- Density of 0.6875 g/mL, DOE Energy Information Administration Average Cost of Wholesale Unleaded Gasoline in July 1997
Diesel	$0.0615	$0.426 / gal -- Density of 0.83 g/mL, DOE Energy Information Administration Average Cost of Wholesale #2 Diesel in July 1998
Makeup Water	$0.00012	$1/1000 gal: Middle of Range $0.35-$1.50/1000 gal Peters & Timmerhaus, p 815
BFW Chemicals	$0.97	Radian Report, Cases
CW Chemicals	$1.00	Unknown
WWT Nutrients	$0.11	Merrick Report Appendix G
WWT Chemicals	$2.50	Merrick Report Appendix G
Utility		
Solid Disposal	$0.01	$20/ton -- Chem Systems Report 1993

Appendix D
Discounted Cash Flow Rate of Return Summary

Discounted Cash Flow Rate of Return

Year		-2	-1	0	1	2	3	4	5	6	7	8	9	10
Fixed Capital Investment		$18,706,738	$140,300,534	$74,826,951										
Working Capital				$11,691,711										
Ethanol Sales					$56,344,666	$75,126,221	$75,126,221	$75,126,221	$75,126,221	$75,126,221	$75,126,221	$75,126,221	$75,126,221	$75,126,221
By-Product Credit					$2,801,911	$3,735,882	$3,735,882	$3,735,882	$3,735,882	$3,735,882	$3,735,882	$3,735,882	$3,735,882	$3,735,882
Total Annual Sales					$59,146,578	$78,862,103	$78,862,103	$78,862,103	$78,862,103	$78,862,103	$78,862,103	$78,862,103	$78,862,103	$78,862,103
Annual Manufacturing Cost														
Raw Materials					$16,894,022	$19,307,454	$19,307,454	$19,307,454	$19,307,454	$19,307,454	$19,307,454	$19,307,454	$19,307,454	$19,307,454
Ion Exchange Resin					$716,376					$716,376				
Baghouse Bags					$341,730					$341,730				
Other Variable Costs					$8,367,094	$9,562,393	$9,562,393	$9,562,393	$9,562,393	$9,562,393	$9,562,393	$9,562,393	$9,562,393	$9,562,393
Fixed Operating Costs					$7,484,090	$7,484,090	$7,484,090	$7,484,090	$7,484,090	$7,484,090	$7,484,090	$7,484,090	$7,484,090	$7,484,090
Total Product Cost					$33,803,313	$36,353,937	$36,353,937	$36,353,937	$36,353,937	$37,412,043	$36,353,937	$36,353,937	$36,353,937	$36,353,937
Annual Depreciation														
General Plant														
DDB					$44,808,645	$32,006,175	$22,861,553	$16,329,681	$11,664,058	$8,331,470	$5,951,050			
SL					$22,404,322	$18,670,269	$16,003,087	$14,288,471	$13,608,067	$13,608,067	$13,608,067			
Remaining Value					$112,021,612	$80,015,437	$57,153,883	$40,824,202	$29,160,145	$20,828,675	$14,877,625			
Actual					$44,808,645	$32,006,175	$22,861,553	$16,329,681	$13,608,067	$13,608,067	$13,608,067			
Steam Plant														
DDB					$5,775,298	$5,342,150	$4,941,489	$4,570,877	$4,228,061	$3,910,957	$3,617,635	$3,346,312	$3,095,339	$2,863,189
SL					$3,850,198	$3,748,877	$3,660,362	$3,585,002	$3,523,385	$3,476,406	$3,445,367	$3,432,115	$3,432,115	$3,432,115
Remaining Value					$71,228,669	$65,886,519	$60,945,030	$56,374,153	$52,146,092	$48,235,135	$44,617,500	$41,271,187	$38,175,848	$35,312,659
Actual					$5,775,298	$5,342,150	$4,941,489	$4,570,877	$4,228,061	$3,910,957	$3,617,635	$3,432,115	$3,432,115	$3,432,115
Taxable Income					-$25,240,677	$5,159,842	$14,705,124	$21,607,608	$24,672,038	$23,931,036	$25,282,464	$39,076,051	$39,076,051	$39,076,051
Income Tax					$0	$2,012,338	$5,734,998	$8,426,967	$9,622,095	$9,333,104	$9,860,161	$15,239,660	$15,239,660	$15,239,660
Annual Cash Income					$25,343,265	$40,495,828	$36,773,168	$34,081,199	$32,886,072	$32,116,956	$32,648,006	$27,268,507	$27,268,507	$27,268,507
Discount Factor		1.21	1.10	1.00	0.91	0.83	0.75	0.68	0.62	0.56	0.51	0.47	0.42	0.39
Annual Present Value	$261,746,504				$23,039,332	$33,467,627	$27,628,226	$23,277,918	$20,419,663	$18,129,184	$16,753,589	$12,720,960	$11,564,509	$10,513,190
Total Capital Investment + Interest		$22,635,153	$154,330,587	$86,518,663										
Net Present Worth				0										

Year	11	12	13	14	15	16	17	18	19	20
Fixed Capital Investment										
Working Capital										-$11,691,711
Ethanol Sales	$75,126,221	$75,126,221	$75,126,221	$75,126,221	$75,126,221	$75,126,221	$75,126,221	$75,126,221	$75,126,221	$75,126,221
By-Product Credit	$3,735,882	$3,735,882	$3,735,882	$3,735,882	$3,735,882	$3,735,882	$3,735,882	$3,735,882	$3,735,882	$3,735,882
Total Annual Sales	$78,862,103	$78,862,103	$78,862,103	$78,862,103	$78,862,103	$78,862,103	$78,862,103	$78,862,103	$78,862,103	$78,862,103
Annual Manufacturing Cost										
Raw Materials	$19,307,454	$19,307,454	$19,307,454	$19,307,454	$19,307,454	$19,307,454	$19,307,454	$19,307,454	$19,307,454	$19,307,454
Ion Exchange Resin	$716,376					$716,376				
Baghouse Bags	$341,730					$341,730				
Other Variable Costs	$9,562,393	$9,562,393	$9,562,393	$9,562,393	$9,562,393	$9,562,393	$9,562,393	$9,562,393	$9,562,393	$9,562,393
Fixed Operating Costs	$7,484,090	$7,484,090	$7,484,090	$7,484,090	$7,484,090	$7,484,090	$7,484,090	$7,484,090	$7,484,090	$7,484,090
Total Product Cost	$37,412,043	$36,353,937	$36,353,937	$36,353,937	$36,353,937	$37,412,043	$36,353,937	$36,353,937	$36,353,937	$36,353,937
Annual Depreciation										
General Plant										
DDB										
SL										
Remaining Value										
Actual										
Steam Plant										
DDB	$2,648,449	$2,449,816	$2,266,080	$2,096,124	$1,938,914	$1,793,496	$1,658,984	$1,534,560	$1,419,468	$1,313,008
SL	$3,432,115	$3,432,115	$3,432,115	$3,432,115	$3,432,115	$3,432,115	$3,432,115	$3,432,115	$3,432,115	$3,432,115
Remaining Value	$32,664,210	$30,214,394	$27,948,315	$25,852,191	$23,913,277	$22,119,781	$20,460,797	$18,926,238	$17,506,770	$16,193,762
Actual	$3,432,115	$3,432,115	$3,432,115	$3,432,115	$3,432,115	$3,432,115	$3,432,115	$3,432,115	$3,432,115	$3,432,115
Taxable Income	$38,017,945	$39,076,051	$39,076,051	$39,076,051	$39,076,051	$38,017,945	$39,076,051	$39,076,051	$39,076,051	$39,076,051
Income Tax	$14,826,998	$15,239,660	$15,239,660	$15,239,660	$15,239,660	$14,826,998	$15,239,660	$15,239,660	$15,239,660	$15,239,660
Annual Cash Income	$26,623,062	$27,268,507	$27,268,507	$27,268,507	$27,268,507	$26,623,062	$27,268,507	$27,268,507	$27,268,507	$27,268,507
Discount Factor	0.35	0.32	0.29	0.26	0.24	0.22	0.20	0.18	0.16	0.15
Annual Present Value	$9,331,221	$8,688,587	$7,898,715	$7,180,650	$6,527,864	$5,793,954	$5,394,929	$4,904,481	$4,458,619	$4,053,290
Total Capital Investment + Interest										-$1,737,898

Ethanol Production Process Engineering Analysis

NREL Year 2000 Case Co-Current Pretreatment & Enzymatic Hydrolysis

All Values in 1997$

Ethanol Production Cost **$1.44**

Ethanol Production (MM Gal. / Year)	52.2	Ethanol at 68°F
Ethanol Yield (Gal / Dry US Ton Feedstock)	68	
Feedstock Cost $/Dry US Ton	25	

Capital Costs	
Feed Handling	$4,900,000
Pretreatment/Detox	$26,300,000
SSCF	$13,400,000
Cellulase	$15,500,000
Distillation	$13,000,000
WWT	$10,400,000
Storage	$1,800,000
Boiler/Turbogen	$44,500,000
Utilities	$5,200,000
Total Equipment Cost	$135,000,000
Added Costs	$98,800,000
(% of TPI)	42%
Total Project Investment	$233,800,000

Operating Costs (cents/gal ethanol)	
Feedstock	37.0
CSL	5.1
Other Raw Materials	12.0
Waste Disposal	1.2
Electricity	-7.2
Fixed Costs	14.3
Capital Recovery	81.4

Operating Costs ($/yr)	
Feedstock	$19,300,000
CSL	$2,700,000
Other Raw Matl. Costs	$6,300,000
Waste Disposal	$600,000
Electricity Credit	-$3,700,000
Fixed Costs	$7,500,000
Capital Recovery	$42,500,000
Cap. Recovery Factor	0.182
Excess Electricity (KWH/ga	1.762
Boiler Feed -- LHV (Btu/lb)	4,144
Boiler Feed -- Water Fracti	0.523

Theoretical Yields	Ethanol MM Gal/year
Cellulose	56.8
Xylan	26.0
Arabinan	1.1
Mannan	5.2
Galactan	0.3
Total Maximum (MM Gal/y	89.4
Maximum Yield (Gal/ton)	115.8
Current Yield (Actual/Theo	58%

File: r9906a.xls

Ethanol Production Rate (MM gal/yr)	52.20	18,557	Feedstock Dry Tons/yr	772165								
			gal/ton	68								
Operating Hours per Year	8,406											
Resin Charge	**Stream No.**	**Acetic Acid**		**Sulfuric Acid**	**Base Resin,CF**	**Base Acetic**	**Base H2SO4**	**Resin Required, CF**				
	ACET220A	3,803	SULF220	921	2500	1,748	357	5731				
Variable Operating Costs												
Raw Material	**Stream No.**	**kg/hr**	**lb/hr**	**1995 Cost ($/lb)**	**$/hour**	**MM$/yr (1995)**	**Cents/Gallon Ethanol (1995)**	**MM$/yr (1997)**	**Cents/Gallon Ethanol (1997)**			
Feedstock	STRM0101	159,948	352,685	0.006513	2,297	19.31	36.99	19.31	36.99			
H2SO4	STRM0710	1,867	4,116	0.0120	49	0.41	0.79	0.42	0.80			
Lime	STRM0745	714	1,574	0.0335	53	0.44	0.85	0.45	0.86			
NH3	STRM0717	1,419	3,128	0.0837	262	2.20	4.22	2.23	4.28			
Corn Steep Liq	STRM0735	1,977	4,360	0.072	313	2.63	5.04	2.67	5.12			
Nutrients	STRM0415	174	385	0.132	51	0.43	0.82	0.43	0.83			
Ammonium	STRM0420	392	865	0.02	19	0.16	0.30	0.16	0.30	1.4 g/L is calculated in Nutrien		11.4
Antifoam	STRM0417	227	500	0.2412	121	1.01	1.94	1.03	1.97			
Diesel	STRM0723	443	977	0.0588	57	0.48	0.93	0.49	0.94			
Makeup Water	STRM0903	185,593	409,232	#######	53	0.45	0.85	0.45	0.87			
BFW	STRM0921	0	1	1.49	2	0.01	0.02	0.01	0.02	**$1.40/lb avg cost in Radian report, 199**		
CW Chemicals	STRM0922	5	12	1.00	12	0.10	0.19	0.10	0.19			
WWT Nutrients	STRM0630	230	508	0.11	53	0.45	0.86	0.46	0.87			
WWT	STRM0631	0.76	1.68	2.39	4	0.03	0.06	0.03	0.07			
Subtotal					**3,345**	**28.12**	**53.86**	**28.25**	**54.12**			
Waste Streams												
Solids Disposal	STRM0809	1,106	2,438	0.01	23	0.19	0.36	0.19	0.37	**$20/metric ton in CSI report, 1993**		
Solids Disposal	STRM0229	2,433	5,364	0.01	50	0.42	0.80	0.42	0.81	**$20/metric ton in CSI report, 1993**		
Subtotal					**72**	**0.61**	**1.17**	**0.62**	**1.18**			
By-Product Credits		KW										
Electricity	WRKWKN	10,942	na	0.040	438	3.68	7.05	3.74	7.16			
Subtotal												
Total Variable Operating					**2,979**	**25.05**	**47.98**	**25.13**	**48.15**			
Fixed Operating												
Plant Manager	80000	1	80,000									
Plant Engineer	65000	1	65,000									
Supr	60000	1	60,000									
Lab Manager	50000	1	50,000									
Shift Supervisor	37000	5	185,000									
Lab Technician	25000	2	50,000									
Tech	28000	8	224,000									
Shift Operators	25000	20	500,000									
Employees	20000	8	160,000									
Manager	100000	1	100,000									
Secretaries	20000	5	100,000									
Total Salaries			1,574,000		1.574	1.57	3.02	1.68	3.23			
t		60%	944,400		0.944	0.94	1.81	0.94	1.81	of Labor & Supervison		
Maintenance		2%	2,700,501		2.701	2.70	5.17	2.70	5.17	Installed Eq. Cost		
Taxes		1.5%	2,154,492		2.154	2.15	4.13	2.15	4.13	of Total Installed Cost		
Operating					7	**7.37**	**14.12**	**7.48**	**14.34**			
Cost						**32.42**	**62.10**	**32.62**	**62.48**			
Annual Capital Charge						**41.15**	**78.84**	**41.15**	**78.84**			
Denatured						**73.57**	**140.94**	**73.77**	**141.32**			
			100% Conversion to Ethanol									
		Kg/hr	Kg/hr	MM								
Feed Cellulose	ZC101FLW	35,556	20,205	56.8								
Feed Xylan	ZX101FLW	15,879	9,228	26.0								
Feed Arabinan	ZA101FLW	658	382	1.1								
Feed Mannan	ZM101FLW	3,274	1,860	5.2								

Appendix E

Comparison of Experimentally Measured and Modeled Information

Comparison of Experimentally Measured and Modeled Information

Table E-1 shows pretreatment yields as measured in experimentally (Reference 17) and modeled in the base case. Overall yeilds were improved to account for near term research improvements. The primary improvement is in xylan to xylose yield. The other xylan products were reduced to allow for a higher xylose yield. Mannan, galactan, and arabinan to monomer yields were modified to match the xylan yields, but those three components are converted to little ethanol even in out year cases.

Table E-1. Pretreatment Hydrolyzer Reactions and Conversions – Measured and Modeled

Reaction	Conversion	Measured	Modeled
$(\text{Cellulose})_n + n\ H_2O \rightarrow n$ Glucose	Cellulose	0.065	0.065
$(\text{Cellulose})_n \rightarrow$ Glucose Olig	Cellulose	0.007	0.007
2 Cellulose $+ H_2O \rightarrow$ Cellobiose	Cellulose	0.007	0.007
Xylan $\rightarrow$ Xylose	Xylan	0.580	0.75
Xylan $\rightarrow$ Xylose Olig	Xylan	0.025	0.05
Xylan $\rightarrow$ Furfural $+ 2\ H_2O$	Xylan	0.182	0.1
Xylan $H_2O \rightarrow$ Tar	Xylan	0.190	0.05
Mannan $H_2O \rightarrow$ Mannose	Mannan	0.595	0.75
Mannan $\rightarrow$ Mannose Olig	Mannan	0.284	0.05
Mannan $\rightarrow$ HMF $+ 2\ H_2O$	Mannan	0.063	0.15
Galactan $+ H_2O \rightarrow$ Galactose	Galactan	0.944	0.75
Galactan $\rightarrow$ Galactose Olig	Galactan	0.056	0.05
Galactan $\rightarrow$ HMF $+ 2\ H_2O$	Galactan	0.000	0.15
Arabinan $+ H_2O \rightarrow$ Arabinose	Arabinan	0.817	0.75
Arabinan $\rightarrow$ Arabinose Olig	Arabinan	0.170	0.05
Arabinan $\rightarrow$ Furfural $+ 2\ H_2O$	Arabinan	0.000	0.1
Arabinan $+ H_2O \rightarrow$ Tar	Arabinan	0.000	0.05
Acetate $\rightarrow$ Acetic Acid	Acetate	1.0	1.0

Tables E-2 and E-3 show saccharification and fermentation yields, respectively, as measured experimentally (Reference 27) and modeled in the base case. Overall yields were improved to account for near term research improvements. An increased cellulose to glucose yield is considered achievable with a 15 FPU/g cellulose enzyme loading. The experiment was run using only 12 FPU/g cellulose. The glucose to ethanol yield is the most important fermentation yield and a 92% yield is considered achievable with an optimized organism. However, that optimized organism may not achieve xylose to ethanol yield of greater than 85%. The measured xylose to ethanol yield may be high due to experimental error. Arabinose, galactose, and mannose are not considered fermentable in the base case.

Table E-2 Production SSCF Saccharification Reactions and Conversions

Reaction	Conversion	Measured	Modeled
Cellulose $\rightarrow$ Glucose Olig	Cellulose	0.068	0.068
2 Cellulose $+ H_2O \rightarrow$ Cellobiose	Cellulose	0.012	0.012
Cellulose $+ H_2O \rightarrow$ Glucose	Cellulose	0.745	0.8
Cellobiose $+ H_2O \rightarrow 2$ Glucose	Cellobiose	1.0	1.0

Table E-3 SSCF Fermentation Reactions and Conversions

Reaction	Conversion	Measured	Modeled
Glucose $\rightarrow$ Ethanol + 2 CO_2	Glucose	0.853	0.92
Glucose + 1.2 NH_3 $\rightarrow$ 6 *Z. Mobilis* + 2.4 H_2O + 0.3 O_2	Glucose	0.027	0.027
Glucose + 2 H_2O $\rightarrow$ 2 Glycerol + O_2	Glucose	0.002	0.002
Glucose + 2 CO_2 $\rightarrow$ 2 Succinic Acid + O_2	Glucose	0.008	0.008
Glucose $\rightarrow$ 3 Acetic Acid	Glucose	0.022	0.022
Glucose $\rightarrow$ 2 Lactic Acid	Glucose	0.013	0.013
3 Xylose $\rightarrow$ 5 Ethanol + 5 CO_2	Xylose	0.916	0.85
Xylose + NH_3 $\rightarrow$ 5 *Z. Mobilis* + 2 H_2O + 0.25 O_2	Xylose	0.029	0.029
3 Xylose + 5 H_2O $\rightarrow$ 5 Glycerol + 2.5 O_2	Xylose	0.002	0.002
Xylose + H_2O $\rightarrow$ Xylitol + 0.5 O_2	Xylose	0.006	0.006
3 Xylose + 5 CO_2 $\rightarrow$ 5 Succinic Acid + 2.5 O_2	Xylose	0.009	0.009
2 Xylose $\rightarrow$ 5 Acetic Acid	Xylose	0.024	0.024
3 Xylose $\rightarrow$ 5 Lactic Acid	Xylose	0.014	0.014

The saccharification reactions are modeled to be series with the fermentation reactions, such that glucose generated by saccharification is available for the subsequent fermentation reactions.

Appendix F

Other Summary Model Results

Summary of Yields, Rates and Conversion Costs					
Case	NREL Near Term	Near Term Best of	Year 2005	Year 2010	Year 2015
Feedstock Rate (dry metric tons/day) to C	2000	2000	2000	2000	2000
Feedstock Rate (dry metric tons/day) to P	2000	2000	2000	2000	2275
Ethanol Production (MM gal/yr)	52.2	58.8	62.2	72.2	87.5
Ethanol Yield (Gal/dry ton (US) feedstock	68.0	76.0	81.0	94.0	112.0
Ethanol Yield Overall (Gal/dry ton (US) fe	68.0	76.0	81.0	94.0	99.0
Total Equipment Cost (1995 MM$)	135.0	119.1	98.4	90.7	92.4
Total Project Investment (1995 MM$)	233.8	205.3	169.4	156.1	159.3
Non-feedstock Raw Matl. (1995 MM$ / yr)	9.0	10.2	7.6	7.3	7.6
Waste Disposal (1995 MM$/yr)	0.6	0.6	1.5	1.5	1.6
Fixed Costs (1995 MM$/ yr)	7.5	6.9	6.2	5.9	5.9
Excess Electricity Generated (kWH/gal Et	1.76	2.66	2.80	1.22	0.0
On-Line Time (hr/yr)	8406	8406	8406	8406	8478
Case ID	R9906A	R9906B	R9906C	R9906D	R9906E

Appendix G

Process Flow Diagrams

Note: Larger format (11” x 17”) versions of these Process Flow Diagrams are available upon request from rwooley@nrel.gov.

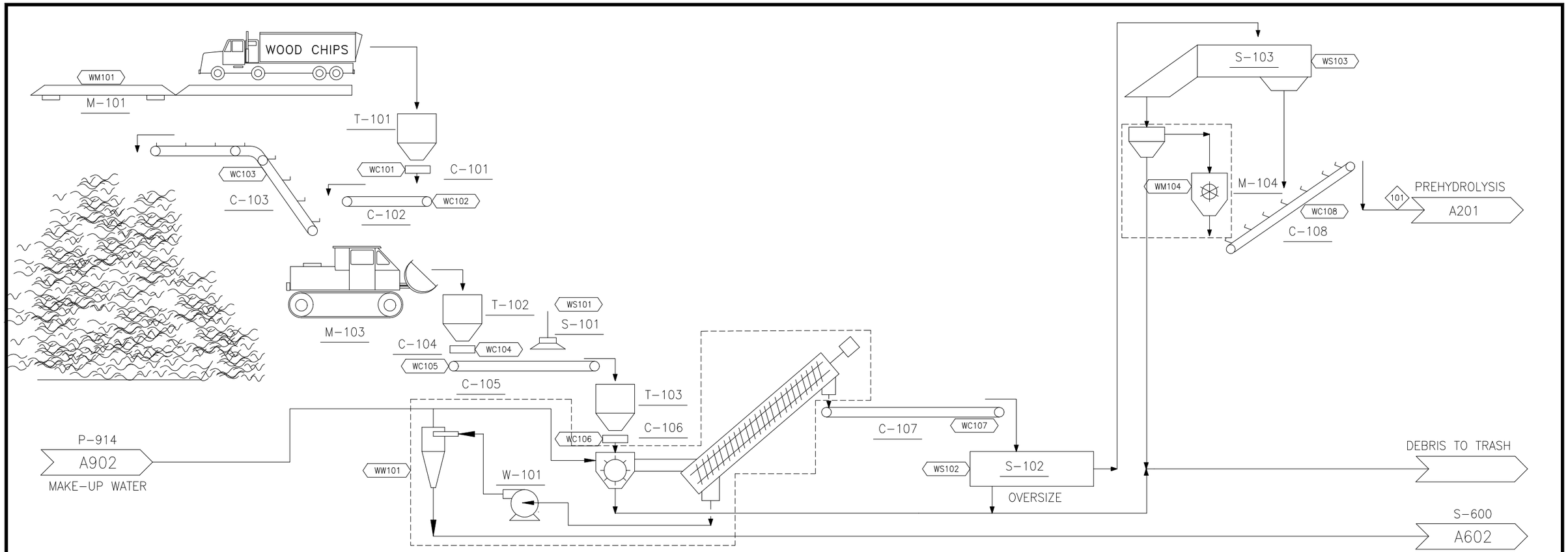

COMPONENT	UNITS	101
Total Flow	kg/hr	159,948
Insoluble Solids	%	52.1%
Soluble Solids	%	0.0%
Temperature	C	20
Pressure	atm	1.00
Vapor Fraction		0.00
Ethanol	kg/hr	
Water	kg/hr	76,615
Glucose (SS)	kg/hr	
Xylose (SS)	kg/hr	
Arabinose (SS)	kg/hr	
Other Sugars (SS)	kg/hr	
Cellobiose (SS)	kg/hr	
Glucose Oligomers (SS)	kg/hr	
Xylose Oligomers (SS)	kg/hr	
Other Oligomers (SS)	kg/hr	
Corn Steep Liquor (SS)	kg/hr	
(NH4)2SO4 (SS)	kg/hr	
NH4Acetate (SS)	kg/hr	
Others (Soluble Solids)	kg/hr	25
Acetic Acid	kg/hr	
Sulfuric Acid	kg/hr	
Furfural	kg/hr	
HMF	kg/hr	
Carbon Dioxide	kg/hr	
Methane	kg/hr	
Oxygen	kg/hr	
Nitrogen	kg/hr	
Ammonia	kg/hr	
NH4OH	kg/hr	
Others	kg/hr	
Cellulose (IS)	kg/hr	35,556
Xylan (IS)	kg/hr	15,879
Arabinan (IS)	kg/hr	658
Other Sugar Polymers (IS)	kg/hr	3,474
Cellulase (IS)	kg/hr	
Biomass (IS)	kg/hr	
Zymo (IS)	kg/hr	
Lignin (IS)	kg/hr	23,068
Gypsum (IS)	kg/hr	
Ca(OH)2 (IS)	kg/hr	
Others (Insoluble Solids)	kg/hr	4,674
Enthalpy Flow (millions)	Kcal/hr	-455.2
Average Density	g/ml	1.217

Heat Stream No.	MM kcal/hr

Work Stream No.	kW
WC101	2.98
WC102	11.19
WC103	22.37
WC104	2.98
WC105	37.29
WC106	0.75
WC107	11.18
WC108	27.96
WM101	6.22
WM104	391.50
WS101	0.00
WS102	29.83
WS103	29.83
WW101	149.10

Eq. No.	Equipment Name	Req.	Spare	Equipment Type	Mat Const.
C-101	Hopper Feeder	3	1	VIBRATING-FEEDER	CS
C-102	Transfer Belt Conveyor	1	0	BELT	CS
C-103	Radial Stacker Conveyor	1	0	BELT	CS
C-104	Reclaim Hopper Feeder	2	0	VIBRATING-FEEDER	CS
C-105	Reclaim Hopper Conveyor	1	0	BELT	CS
C-106	Chip Washer Feeder	4	0	VIBRATING-FEEDER	CS
C-107	Scalper Screen Feeder	2	0	BELT	CS
C-108	Pretreatment Feeder	1	0	BELT	CS
M-101	Hydraulic Truck Dump with Scale	3	1	TRUCK-SCALE	CS
M-103	Front End Loaders	2	0	LOADER	
M-104	Disk Refiner System	1	0	MISCELLANEOUS	SS316
S-101	Magnetic Separator	1	0	MAGNET	
S-102	Scalper Screener	2	0	SCREEN	CS
S-103	Chip Thickness Screen	1	0	SCREEN	CS
T-101	Dump Hopper	3	1	VERTICAL-VESSEL	CS
T-102	Reclaim Hopper	2	0	VERTICAL-VESSEL	CS
T-103	Washing/Refining Surge Bin	4	0	VERTICAL-VESSEL	CS
W-101	Chip Washer System	4	0	MISCELLANEOUS	SS304;SS316

VER	DESCRIPTION	DATE
A	SUBCONTRACTOR UPDATE	10/98
B	BASECASE UPDATE	11/98
C	DESIGN REPORT	2/99
D	FINAL 1999 DESIGN REPORT	6/99
		LL 6/23/99

NREL
NATIONAL RENEWABLE ENERGY LABORATORY
Biotechnology Center For Fuels And Chemicals

SECTION A100
WOOD CHIP FEED HANDLING

R9906A.xls | PFD-P100-A101 | D

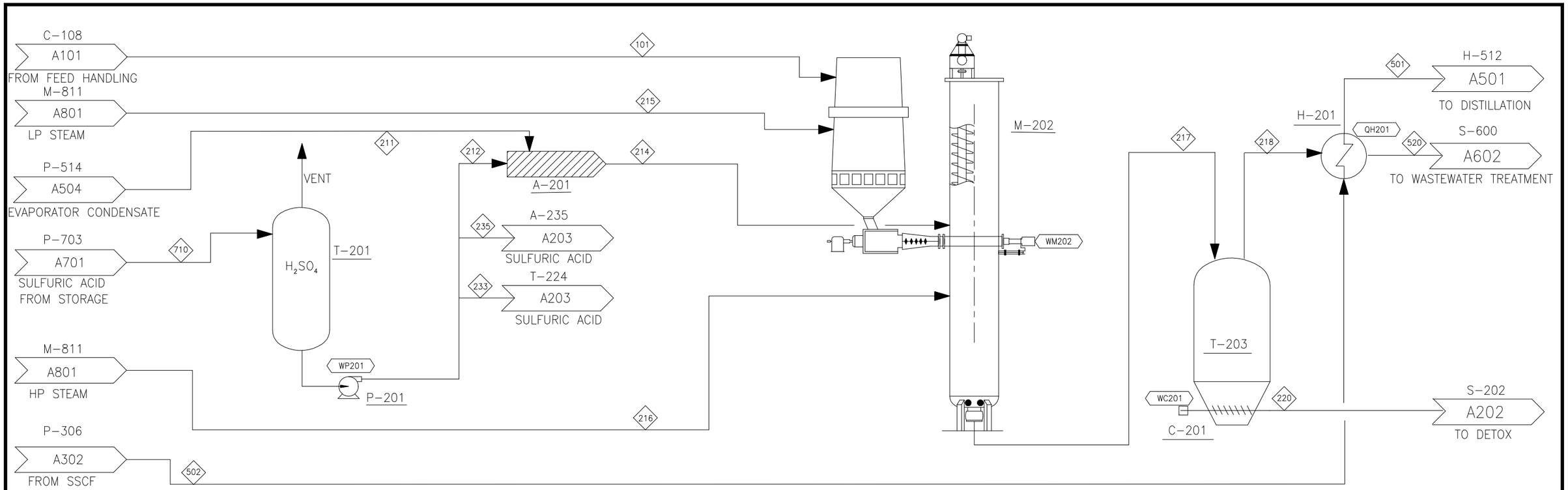

COMPONENT	UNITS	101	211	212	214	215	216	217	218	220	233	235	501	502	520	710
Total Flow	kg/hr	159,948	47,637	921	48,559	16,960	44,596	270,063	45,134	224,928	304	641	380,209	380,209	45,134	1,867
Insoluble Solids	%	52.1%	0.0%	0.0%	0.0%	0.0%	0.0%	21.8%	0.0%	26.1%	0.0%	0.0%	8.3%	8.3%	0.0%	0.0%
Soluble Solids	%	0.0%	0.3%	0.0%	0.3%	0.0%	0.0%	7.9%	0.1%	9.4%	0.0%	0.0%	2.9%	2.9%	0.1%	0.0%
Temperature	C	20	74	20	74	164	268	190	101	101	20	20	95	30	100	20
Pressure	atm	1.00	3.00	3.40	4.00	4.42	13.00	12.20	1.00	1.00	3.40	3.40	4.00	0.90	1.00	1.00
Vapor Fraction		0.00	0.00	0.00	0.00	1.00	1.00	0.00	1.00	0.00	0.00	0.00	0.00	0.00	0.07	0.00
Ethanol	kg/hr		38		38			38	29	9			18,701	18,701	29	
Water	kg/hr	76,615	47,092		47,092	16,960	44,596	183,384	43,822	139,562			308,205	308,205	43,822	
Glucose (SS)	kg/hr							2,568		2,568			219	219		
Xylose (SS)	kg/hr		0		0			13,533	0	13,533			721	721	0	
Arabinose (SS)	kg/hr		0		0			561	0	561			569	569	0	
Other Sugars (SS)	kg/hr							2,895		2,895			2,936	2,936		
Cellobiose (SS)	kg/hr							263		263			383	383		
Glucose Oligomers (SS)	kg/hr							423		423			3,021	3,021		
Xylose Oligomers (SS)	kg/hr		0		0			827	0	827			1,006	1,006	0	
Other Oligomers (SS)	kg/hr															
Corn Steep Liquor (SS)	kg/hr		130		130			130	31	99			2,327	2,327	31	
(NH4)2SO4 (SS)	kg/hr															
NH4Acetate (SS)	kg/hr															
Others (Soluble Solids)	kg/hr	25						25		25			29	29		
Acetic Acid	kg/hr		205		205			4,071	265	3,806			2,545	2,545	265	
Sulfuric Acid	kg/hr		0	921	921			921	0	921	304	641	295	295	0	1,867
Furfural	kg/hr		117		117			1,203	736	466			1,010	1,010	736	
HMF	kg/hr		39		39			405	248	157			340	340	248	
Carbon Dioxide	kg/hr												487	487		
Methane	kg/hr															
Oxygen	kg/hr												0	0		
Nitrogen	kg/hr												0	0		
Ammonia	kg/hr		0		0			0	0	0			12	12	0	
NH4OH	kg/hr															
Others	kg/hr		15		15			15	3	12			5,787	5,787	3	
Cellulose (IS)	kg/hr	35,556						32,747		32,747			3,631	3,631		
Xylan (IS)	kg/hr	15,879						794		794			794	794		
Arabinan (IS)	kg/hr	658						33		33			33	33		
Other Sugar Polymers (IS)	kg/hr	3,474						174		174			164	164		
Cellulase (IS)	kg/hr												624	624		
Biomass (IS)	kg/hr												245	245		
Zymo (IS)	kg/hr												1,061	1,061		
Lignin (IS)	kg/hr	23,068						23,068		23,068			23,068	23,068		
Gypsum (IS)	kg/hr												8	8		
Ca(OH)2 (IS)	kg/hr															
Others (Insoluble Solids)	kg/hr	4,674						1,986		1,986			1,986	1,986		
Enthalpy Flow (millions)	Kcal/hr	-455.2	-177.2	-1.8	-179.0	-53.3	-138.0	-825.4	-140.1	-685.3	-0.6	-1.2	-1295.5	-1317.5	-162.2	-3.6
Average Density	g/ml	1.217	0.945	3.102	0.951	0.002	0.005	1.000	0.001	1.124	3.102	3.102	0.971	0.960	0.009	3.102

Heat Stream No.	MM kcal/hr
QH201	-22.06

Work Stream No.	kW
WC201	36.96
WM202	863.08
WP201	0.39

Eq. No.	Equipment Name	Req.	Spare	Equipment Type	Mat Const.
A-201	In-line Sulfuric Acid Mixer	1	0	STATIC	SS304
C-201	Hydrolyzate Screw Conveyor	1	0	SCREW	SS316
H-201	Beer Column Feed Economizer	2	1	SHELL-TUBE	304SS
M-202	Prehydrolysis/Screw Feeder/Impregnator Reac	1	0	SCREW	HASTELLOY-C 200;S
P-201	Sulfuric Acid Pump	1	1	CENTRIFUGAL	SS304
T-201	Sulfuric Acid Storage	1	0	VERTICAL-VESSEL	PLASTIC
T-203	Blowdown Tank	1	0	VERTICAL-VESSEL	SS316

VER	DESCRIPTION	DATE
A	SUBCONTRACTOR UPDATE	4/98
B	BASECASE UPDATE	9/98
C	DESIGN REPORT	2/99
D	FINAL 1999 DESIGN REPORT	6/99
		LL 6/23/99

NREL NATIONAL RENEWABLE ENERGY LABORATORY
Biotechnology Center For Fuels And Chemicals

SECTION A200
PREHYDROLYSIS

R9906A.xls | PFD-P100-A201 | D

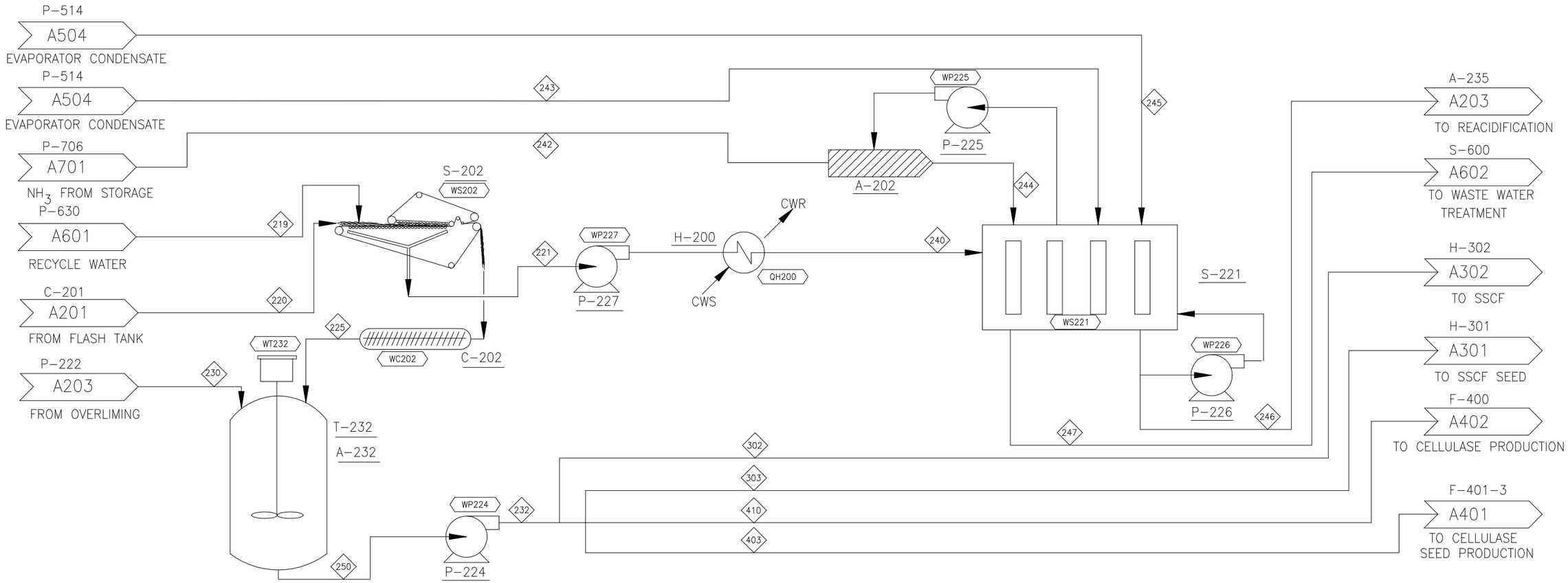

COMPONENT	UNITS	219	220	221	225	230	232	240	242	243	244	245	246	247	250	302	303	403	410
Total Flow	kg/hr	131,896	224,928	209,657	147,167	215,571	362,738	209,657	1,139	65,828	66,967	29,862	213,845	92,641	362,738	309,244	34,360	957	18,176
Insoluble Solids	%	0.2%	26.1%	0.1%	40.0%	0.0%	16.2%	0.1%	0.0%	0.0%	0.0%	0.0%	0.1%	0.0%	16.2%	16.2%	16.2%	16.2%	16.2%
Soluble Solids	%	1.1%	9.4%	7.6%	4.6%	7.4%	6.3%	7.6%	0.0%	0.0%	0.0%	0.3%	7.5%	4.9%	6.3%	6.3%	6.3%	6.3%	6.3%
Temperature	C	47	101	75	75	51	59	40	20	73	50	74	40	40	59	59	59	59	59
Pressure	atm	1.00	1.00	1.00	1.00	1.00	1.00	1.00	17.00	3.00	3.00	3.00	3.00	3.00	1.00	1.00	1.00	1.00	1.00
Vapor Fraction		0.00	0.00	0.00	0.00	0.00	0.00	0.00	0.00	0.00	0.00	0.00	0.00	0.00	0.00	0.00	0.00	0.00	0.00
Ethanol	kg/hr	18	9	19	8	43	52	19				24	43		52	44	5	0	3
Water	kg/hr	128,033	139,562	188,193	79,402	197,587	276,989	188,193		65,828	64,623	29,520	195,535	87,893	276,989	236,141	26,238	731	13,880
Glucose (SS)	kg/hr	0	2,568	1,806	762	1,802	2,564	1,806					1,806		2,564	2,186	243	7	128
Xylose (SS)	kg/hr	109	13,533	9,594	4,048	9,572	13,620	9,594				0	9,594		13,620	11,611	1,290	36	682
Arabinose (SS)	kg/hr	86	561	455	192	454	646	455				0	455		646	551	61	2	32
Other Sugars (SS)	kg/hr	444	2,895	2,348	991	2,343	3,333	2,348					2,348		3,333	2,842	316	9	167
Cellobiose (SS)	kg/hr	58	263	225	95	225	320	225					225		320	273	30	1	16
Glucose Oligomers (SS)	kg/hr	456	423	618	261	617	878	618					618		878	748	83	2	44
Xylose Oligomers (SS)	kg/hr	152	827	688	290	687	977	688				0	688		977	833	93	3	49
Other Oligomers (SS)	kg/hr																		
Corn Steep Liquor (SS)	kg/hr	191	99	204	86	285	371	204				82	285		371	316	35	1	19
(NH4)2SO4 (SS)	kg/hr													915					
NH4Acetate (SS)	kg/hr													3,606					
Others (Soluble Solids)	kg/hr	3	25	20	8	20	28	20					20		28	24	3	0	1
Acetic Acid	kg/hr	450	3,806	2,993	1,263	311	1,574	2,993				129	312		1,574	1,342	149	4	79
Sulfuric Acid	kg/hr	45	921	679	287		287	679				0			287	244	27	1	14
Furfural	kg/hr	467	466	657	277	728	1,005	657				73	730		1,005	857	95	3	50
HMF	kg/hr	157	157	221	93	245	339	221				25	246		339	289	32	1	17
Carbon Dioxide	kg/hr	0		0	0	0	0	0					0		0	0	0	0	0
Methane	kg/hr																		
Oxygen	kg/hr																		
Nitrogen	kg/hr																		
Ammonia	kg/hr	10	0	7	3		3	7	1,139			0		7	3	2	0	0	0
NH4OH	kg/hr										2,344			219					
Others	kg/hr	889	12	634	267	642	909	634				9	643		909	775	86	2	46
Cellulose (IS)	kg/hr	15	32,747	164	32,598	1	32,599	164					164		32,599	27,792	3,088	86	1,634
Xylan (IS)	kg/hr	3	794	4	793	0	793	4					4		793	676	75	2	40
Arabinan (IS)	kg/hr	0	33	0	33	0	33	0					0		33	28	3	0	2
Other Sugar Polymers (IS)	kg/hr	1	174	1	174	0	174	1					1		174	148	16	0	9
Cellulase (IS)	kg/hr	66		0	65	0	65	0					0		65	56	6	0	3
Biomass (IS)	kg/hr	26		0	26	0	26	0					0		26	22	2	0	1
Zymo (IS)	kg/hr	112		1	111	0	111	1					1		111	95	11	0	6
Lignin (IS)	kg/hr	97	23,068	116	23,049	1	23,050	116					116		23,050	19,651	2,183	61	1,155
Gypsum (IS)	kg/hr	0		0	0	8	8	0					0		8	7	1	0	0
Ca(OH)2 (IS)	kg/hr																		
Others (Insoluble Solids)	kg/hr	8	1,986	10	1,985	0	1,985	10					10		1,985	1,692	188	5	99
Enthalpy Flow (millions)	Kcal/hr	-488.6	-685.3	-739.4	-434.5	-772.9	-1207.5	-746.0	-1.1	-246.3	-244.3	-111.1	-768.0	-347.3	-1207.5	-1029.4	-114.4	-3.2	-60.5
Average Density	g/ml	0.979	1.124	0.976	1.196	0.998	1.078	1.011	0.610	0.945	0.978	0.945	1.010	0.914	1.078	1.078	1.078	1.078	1.078

Heat Stream No.	MM kcal/hr
QH200	6.60

Work Stream No.	kW
WC202	44.59
WP224	59.04
WP225	15.21
WP226	23.12
WP227	46.94
WS202	44.60
WS221	2.24
WT232	25.55

Eq. No.	Equipment Name	Req.	Spare	Equipment Type	Mat Const.
A-202	In-line NH3 Mixer	1	0	STATIC	SS304
A-232	Reslurrying Tank Agitator	1	0	FIXED-PROP	SS
C-202	Wash Solids Screw Conveyor	4	0	SCREW	SS304
H-200	Hydrolyzate Cooler	1	0	SHELL-TUBE	304SS;CS
P-224	Fermentation Feed Pump	2	1	ROTARY-LOBE	304SS
P-225	ISEP Elution Pump	1	1	CENTRIFUGAL	SS304
P-226	ISEP Reload Pump	1	1	CENTRIFUGAL	SS304
P-227	ISEP Hydrolyzate Feed Pump	1	1	CENTRIFUGAL	SS304
S-202	Pre-IX Belt Filter Press	8	0	BELT-FILTER-PRESS	SS316
S-221	ISEP	1	0	CONT-IX	SS316;POLYPROP;R
T-232	Slurrying Tank	1	0	FLAT-BTM-STORAGE	SS304

VER	DESCRIPTION	DATE
A	SUBCONTRACTOR UPDATE	5/97
B	BASECASE UPDATE	9/98
C	DESIGN REPORT	2/99
D	FINAL 1999 DESIGN REPORT	6/99
		LL 6/23/99

NREL
NATIONAL RENEWABLE ENERGY LABORATORY
Biotechnology Center For Fuels And Chemicals

SECTION A200
DETOXIFICATION

R9906A.xls | PFD-P100-A202 | D

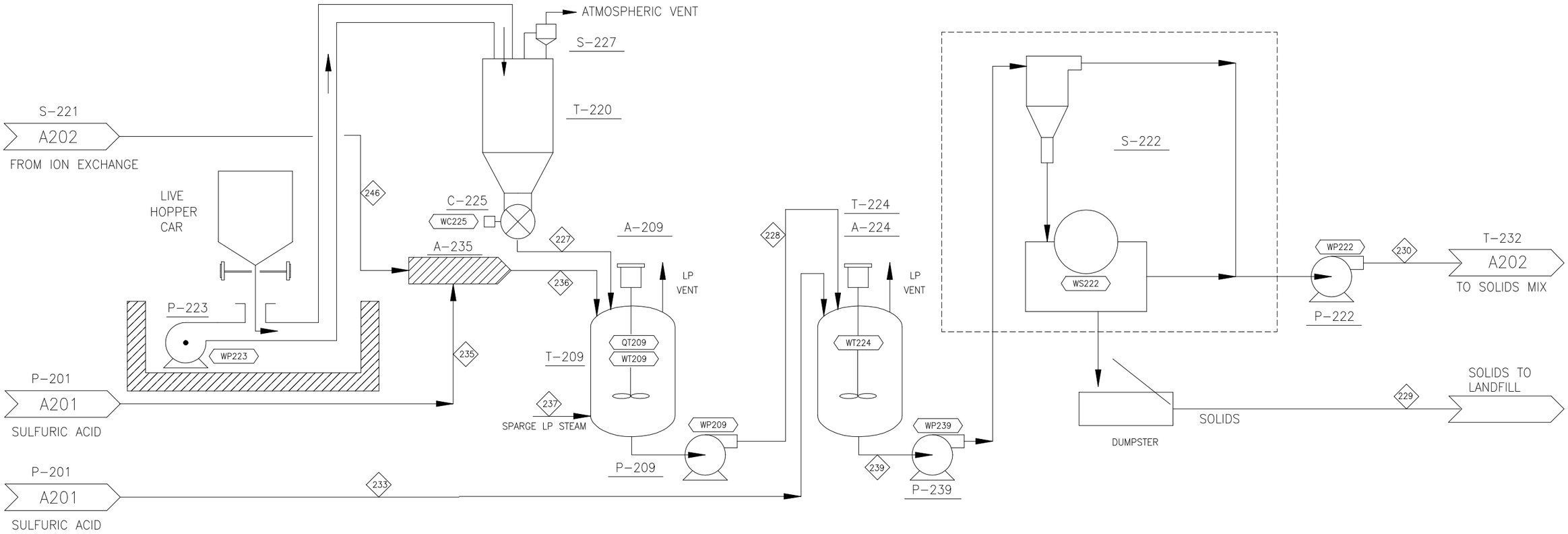

COMPONENT	UNITS	227	228	229	230	233	235	236	237	239	246
Total Flow	kg/hr	714	217,699	2,433	215,571	304	641	214,486	2,499	218,003	213,845
Insoluble Solids	%	100.0%	0.8%	79.9%	0.0%	0.0%	0.0%	0.1%	0.0%	0.9%	0.1%
Soluble Solids	%	0.0%	7.4%	1.5%	7.4%	0.0%	0.0%	7.5%	0.0%	7.4%	7.5%
Temperature	C		50	51	51	20	20	40	164	51	40
Pressure	atm	1.00	1.00	1.00	1.00	3.40	3.40	3.00	4.42	1.00	3.00
Vapor Fraction		0.00	0.00	0.00	0.00	0.00	0.00	0.00	1.00	0.00	0.00
Ethanol	kg/hr		43	0	43			43		43	43
Water	kg/hr		198,034	447	197,587			195,535	2,499	198,034	195,535
Glucose (SS)	kg/hr		1,806	4	1,802			1,806		1,806	1,806
Xylose (SS)	kg/hr		9,594	22	9,572			9,594		9,594	9,594
Arabinose (SS)	kg/hr		455	1	454			455		455	455
Other Sugars (SS)	kg/hr		2,348	5	2,343			2,348		2,348	2,348
Cellobiose (SS)	kg/hr		225	1	225			225		225	225
Glucose Oligomers (SS)	kg/hr		618	1	617			618		618	618
Xylose Oligomers (SS)	kg/hr		688	2	687			688		688	688
Other Oligomers (SS)	kg/hr										
Corn Steep Liquor (SS)	kg/hr		285	1	285			285		285	285
(NH4)2SO4 (SS)	kg/hr										
NH4Acetate (SS)	kg/hr										
Others (Soluble Solids)	kg/hr		20	0	20			20		20	20
Acetic Acid	kg/hr		312	1	311			312		312	312
Sulfuric Acid	kg/hr					304	641	641			
Furfural	kg/hr		730	2	728			730		730	730
HMF	kg/hr		246	1	245			246		246	246
Carbon Dioxide	kg/hr		0	0	0			0		0	0
Methane	kg/hr										
Oxygen	kg/hr										
Nitrogen	kg/hr										
Ammonia	kg/hr										
NH4OH	kg/hr										
Others	kg/hr		643	1	642			643		643	643
Cellulose (IS)	kg/hr		164	163	1			164		164	164
Xylan (IS)	kg/hr		4	4	0			4		4	4
Arabinan (IS)	kg/hr		0	0	0			0		0	0
Other Sugar Polymers (IS)	kg/hr		1	1	0			1		1	1
Cellulase (IS)	kg/hr		0	0	0			0		0	0
Biomass (IS)	kg/hr		0	0	0			0		0	0
Zymo (IS)	kg/hr		1	1	0			1		1	1
Lignin (IS)	kg/hr		116	115	1			116		116	116
Gypsum (IS)	kg/hr		1,125	1,651	8			0		1,659	0
Ca(OH)2 (IS)	kg/hr	714	230								
Others (Insoluble Solids)	kg/hr		10	10	0			10		10	10
Enthalpy Flow (millions)	Kcal/hr	-2.3	-779.4	-7.0	-772.9	-0.6	-1.2	-769.2	-7.9	-779.9	-768.0
Average Density	g/ml	2.343	1.008	1.912	0.998	3.102	3.102	1.011	0.002	1.009	1.010

Heat Stream No.	MM kcal/hr
QT209	38.38

Work Stream No.	kW
WC225	0.25
WP209	47.39
WP222	47.16
WP223	8.57
WP239	31.69
WS222	24.29
WT209	21.37
WT224	85.62

Eq. No.	Equipment Name	Req.	Spare	Equipment Type	Mat Const.
A-209	Overliming Tank Agitator	1	0	FIXED-PROP	SS
A-224	Reacidification Tank Agitator	1	0	FIXED-PROP	SS
A-235	In-line Acidification Mixer	1	0	STATIC	304SS
C-225	Lime Solids Feeder	1	0	ROTARY-VALVE	A285C
P-209	Overlimed Hydrolyzate Pump	1	1	CENTRIFUGAL	304SS
P-222	Filtered Hydrolyzate Pump	1	1	CENTRIFUGAL	304SS
P-223	Lime Unloading Blower	1	0	CENTRIFUGAL	C.S.
P-239	Reacidified Liquor Pump	1	1	CENTRIFUGAL	SS304
S-222	Hydroclone & Rotary Drum Filter	1	0	ROTARY-DRUM	EPOXY LINED
S-227	LimeDust Vent Baghouse	1	0	FABRIC-FILTER	A285C;POLYESTER
T-209	Overliming Tank	1	0	VERTICAL-VESSEL	SS304
T-220	Lime Storage Bin	1	0	LIVE-BTM-BIN	CS
T-224	Reacidification Tank	1	0	FLAT-BTM-STORAGE	SS304

VER	DESCRIPTION	DATE
A	SUBCONTRACTOR UPDATE	4/98
B	BASECASE UPDATE	9/98
C	DESIGN REPORT	2/99
D	FINAL 1999 DESIGN REPORT	6/99
		LL 6/23/99

NREL NATIONAL RENEWABLE ENERGY LABORATORY
Biotechnology Center For Fuels And Chemicals

SECTION A200
LIME ADDITION

R9906A.xls | PFD-P100-A203 | D

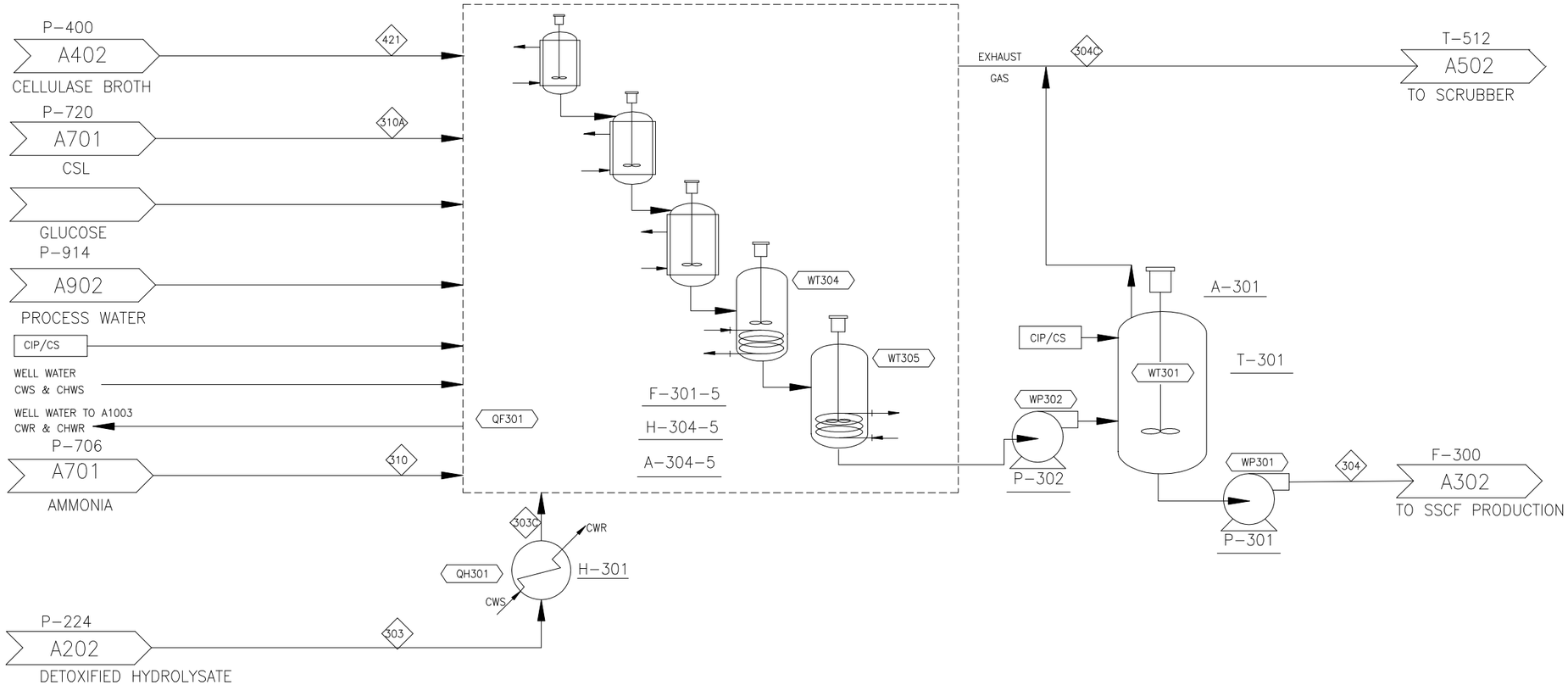

COMPONENT	UNITS	303	303C	304	304C	310	310A	421
Total Flow	kg/hr	34,360	34,360	37,997	876	8	583	3,922
Insoluble Solids	%	16.2%	16.2%	13.8%	0.0%	0.0%	0.0%	5.6%
Soluble Solids	%	6.3%	6.3%	3.8%	0.0%	0.0%	100.0%	1.7%
Temperature	C	59	30	30	30	35	35	28
Pressure	atm	1.00	1.00	1.00	1.00	1.00	1.00	1.66
Vapor Fraction		0.00	0.00	0.00	1.00	1.00	0.00	0.00
Ethanol	kg/hr	5	5	929	7			0
Water	kg/hr	26,238	26,238	29,713	15			3,549
Glucose (SS)	kg/hr	243	243	60				
Xylose (SS)	kg/hr	1,290	1,290	129				
Arabinose (SS)	kg/hr	61	61	61				
Other Sugars (SS)	kg/hr	316	316	316				
Cellobiose (SS)	kg/hr	30	30	33				3
Glucose Oligomers (SS)	kg/hr	83	83	96				13
Xylose Oligomers (SS)	kg/hr	93	93	101				8
Other Oligomers (SS)	kg/hr							
Corn Steep Liquor (SS)	kg/hr	35	35	661	0		583	43
(NH4)2SO4 (SS)	kg/hr							
NH4Acetate (SS)	kg/hr							
Others (Soluble Solids)	kg/hr	3	3	3				0
Acetic Acid	kg/hr	149	149	198	0			15
Sulfuric Acid	kg/hr	27	27	30	0			2
Furfural	kg/hr	95	95	101	0			6
HMF	kg/hr	32	32	34	0			2
Carbon Dioxide	kg/hr	0	0	43	838			0
Methane	kg/hr							
Oxygen	kg/hr			0	15			0
Nitrogen	kg/hr			0	0			0
Ammonia	kg/hr	0	0			8		
NH4OH	kg/hr							
Others	kg/hr	86	86	252	0			60
Cellulose (IS)	kg/hr	3,088	3,088	2,470				
Xylan (IS)	kg/hr	75	75	79				4
Arabinan (IS)	kg/hr	3	3	3				0
Other Sugar Polymers (IS)	kg/hr	16	16	16				
Cellulase (IS)	kg/hr	6	6	62				56
Biomass (IS)	kg/hr	2	2	25				22
Zymo (IS)	kg/hr	11	11	75				3
Lignin (IS)	kg/hr	2,183	2,183	2,307				123
Gypsum (IS)	kg/hr	1	1	1				0
Ca(OH)2 (IS)	kg/hr							
Others (Insoluble Solids)	kg/hr	188	188	199				11
Enthalpy Flow (milliions)	Kcal/hr	-114.4	-115.2	-129.9	-1.8	0.0	-2.2	-14.3
Average Density	g/ml	1.078	1.102	1.066	0.002	0.001	0.984	1.021

Heat Stream No.	MM kcal/hr
QF301	0.12
QH301	0.79

Work Stream No.	kW
WP301	14.96
WP302	14.96
WT301	20.41
WT304	10.21
WT305	34.02

Eq. No.	Equipment Name	Req.	Spare	Equipment Type	Mat Const.
A-301	Seed Hold Tank Agitator	1	0	FIXED-PROP	SS304
A-304	4th Seed Vessel Agitator	2	0	FIXED-PROP	SS
A-305	5th Seed Vessel Agitator	2	0	FIXED-PROP	SS
F-301	1st SSCF Seed Fermentor	2	0	VERTICAL-VESSEL	SS304
F-302	2nd SSCF Seed Fermentor	2	0	VERTICAL-VESSEL	SS304
F-303	3rd SSCF Seed Fermentor	2	0	VERTICAL-VESSEL	SS304
F-304	4th SSCF Seed Fermentor	2	0	FLAT-BTM-STORAGE	SS304
F-305	5th SSCF Seed Fermentor	2	0	FLAT-BTM-STORAGE	SS304
H-301	SSCF Seed Hydrolyzate Cooler	1	0	PLATE-FRAME	SS304
H-304	4TH Seed Fermentor Coils	1	0	IMMERSED-COIL	SS
H-305	5TH Seed Fermentor Coils	1	0	IMMERSED-COIL	SS
P-301	SSCF Seed Transfer Pump	1	1	ROTARY-LOBE	SS304
P-302	Seed Transfer Pump	2	0	ROTARY-LOBE	SS304
T-301	SSCF Seed Hold Tank	1	0	FLAT-BTM-STORAGE	SS304

VER	DESCRIPTION	DATE
A	SUBCONTRACTOR UPDATE	4/98
B	BASECASE UPDATE	9/98
C	DESIGN REPORT	2/99
D	FINAL 1999 DESIGN REPORT	6/99
		LL 6/23/99

NREL NATIONAL RENEWABLE ENERGY LABORATORY
Biotechnology Center For Fuels And Chemicals

SECTION A300
SSCF SEED & PRODUCTION FERM.

R9906A.xls | PFD-P100-A301 | D

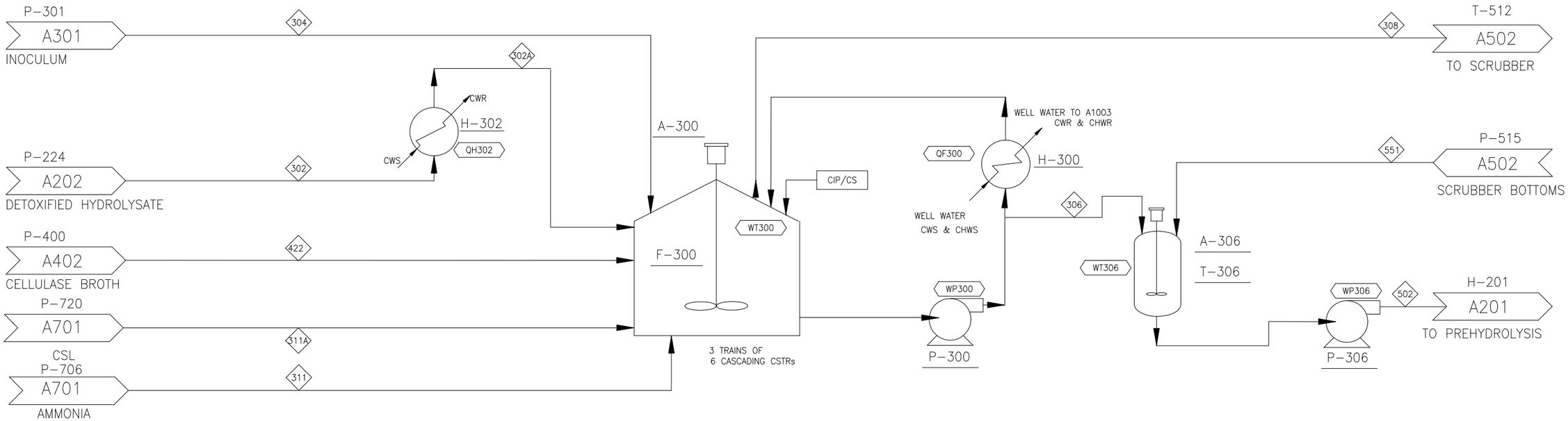

COMPONENT	UNITS	302	302A	304	306	308	311	311A	422	502	551
Total Flow	kg/hr	309,244	309,244	37,997	366,647	16,978	129	959	35,296	380,209	13,562
Insoluble Solids	%	16.2%	16.2%	13.8%	8.6%	0.0%	0.0%	0.0%	5.6%	8.3%	0.0%
Soluble Solids	%	6.3%	6.3%	3.8%	3.1%	0.0%	0.0%	100.0%	1.7%	2.9%	0.0%
Temperature	C	59	34	30	30	30	35	35	28	30	30
Pressure	atm	1.00	1.00	1.00	1.00	1.00	1.00	1.00	1.66	0.90	0.90
Vapor Fraction		0.00	0.00	0.00	0.00	1.00	1.00	0.00	0.00	0.00	0.00
Ethanol	kg/hr	44	44	929	18,365	263			2	18,701	337
Water	kg/hr	236,141	236,141	29,713	295,010	288			31,940	308,205	13,195
Glucose (SS)	kg/hr	2,186	2,186	60	219					219	
Xylose (SS)	kg/hr	11,611	11,611	129	721					721	
Arabinose (SS)	kg/hr	551	551	61	569					569	
Other Sugars (SS)	kg/hr	2,842	2,842	316	2,936					2,936	
Cellobiose (SS)	kg/hr	273	273	33	383				25	383	
Glucose Oligomers (SS)	kg/hr	748	748	96	3,021				119	3,021	
Xylose Oligomers (SS)	kg/hr	833	833	101	1,006				72	1,006	
Other Oligomers (SS)	kg/hr										
Corn Steep Liquor (SS)	kg/hr	316	316	661	2,324	2		959	390	2,327	3
(NH4)2SO4 (SS)	kg/hr										
NH4Acetate (SS)	kg/hr										
Others (Soluble Solids)	kg/hr	24	24	3	29				2	29	
Acetic Acid	kg/hr	1,342	1,342	198	2,543	1			139	2,545	2
Sulfuric Acid	kg/hr	244	244	30	295	0			21	295	0
Furfural	kg/hr	857	857	101	1,003	6			52	1,010	7
HMF	kg/hr	289	289	34	338	2			17	340	2
Carbon Dioxide	kg/hr	0	0	43	471	16,281			0	487	16
Methane	kg/hr										
Oxygen	kg/hr			0	0	134			0	0	0
Nitrogen	kg/hr			0	0	1			1	0	0
Ammonia	kg/hr	2	2		11	0	129			12	0
NH4OH	kg/hr										
Others	kg/hr	775	775	252	5,786	0			538	5,787	0
Cellulose (IS)	kg/hr	27,792	27,792	2,470	3,631					3,631	
Xylan (IS)	kg/hr	676	676	79	794				38	794	
Arabinan (IS)	kg/hr	28	28	3	33				2	33	
Other Sugar Polymers (IS)	kg/hr	148	148	16	164					164	
Cellulase (IS)	kg/hr	56	56	62	624				506	624	
Biomass (IS)	kg/hr	22	22	25	245				199	245	
Zymo (IS)	kg/hr	95	95	75	1,061				24	1,061	
Lignin (IS)	kg/hr	19,651	19,651	2,307	23,068				1,111	23,068	
Gypsum (IS)	kg/hr	7	7	1	8				0	8	
Ca(OH)2 (IS)	kg/hr										
Others (Insoluble Solids)	kg/hr	1,692	1,692	199	1,986				96	1,986	
Enthalpy Flow (millions)	Kcal/hr	-1029.4	-1035.6	-129.9	-1267.1	-36.0	-0.1	-3.6	-128.4	-1317.5	-50.4
Average Density	g/ml	1.078	1.099	1.066	1.035	0.002	0.001	0.984	1.021	0.960	0.983

Heat Stream No.	M M kcal/hr
QF300	5.51
QH302	6.19

Work Stream No.	kW
WP300	896.62
WP306	100.18
WT300	1789.02
WT306	2.65

Eq. No.	Equipment Name	Req.	Spare	Equipment Type	Mat Const.
A-300	SSCF Fermentor Agitators	34	0	FIXED-PROP	SS304
A-306	Beer Surge Tank Agitator	1	0	FIXED-PROP	SS304
F-300	SSCF Fermentors	17	0	FLAT-BTM-STORAGE	SS304
H-300	Fermentation Cooler	17	1	PLATE-FRAME	SS304
H-302	SSCF Hydrolyzate Cooler	3	0	PLATE-FRAME	SS304
P-300	SSCF Recirculation and Transfer Pump	17	1	CENTRIFUGAL	SS304
P-306	Beer Transfer Pump	1	1	CENTRIFUGAL	SS304
T-306	Beer Storage Tank	1	0	FLAT-BTM-STORAGE	SS304

VER	DESCRIPTION	DATE
A	SUBCONTRACTOR UPDATE	4/98
B	BASECASE UPDATE	9/98
C	DESIGN REPORT	2/99
D	FINAL 1999 DESIGN REPORT	6/99

LL 6/23/99

NATIONAL RENEWABLE ENERGY LABORATORY

Biotechnology Center For Fuels And Chemicals

SECTION A300
SSCF SEED & PRODUCTION FERM.

R9906A.xls | PFD-P100-A302 | D

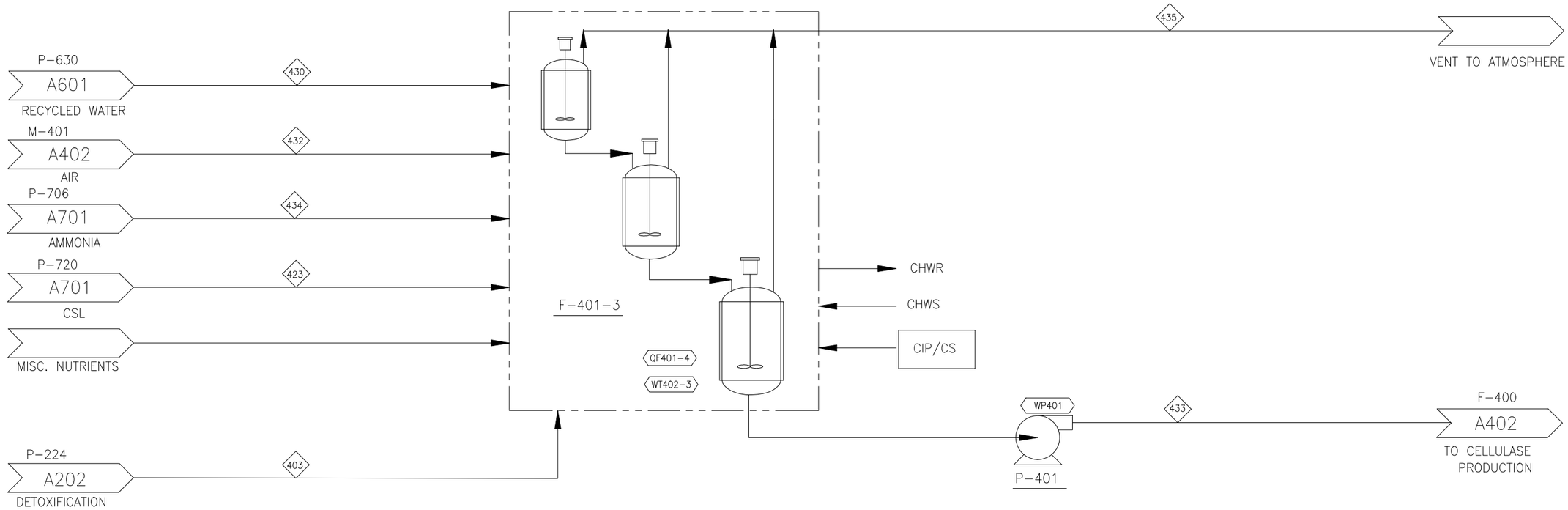

COMPONENT	UNITS	403	423	430	432	433	434	435
Total Flow	kg/hr	957	30	2,147	20,928	2,580	8	21,488
Insoluble Solids	%	16.2%	0.0%	0.2%	0.0%	4.7%	0.0%	0.0%
Soluble Solids	%	6.3%	100.0%	1.1%	0.0%	1.7%	0.0%	0.0%
Temperature	C	59	28	47	40	28	28	28
Pressure	atm	1.00	1.00	1.00	1.00	1.00	1.00	1.00
Vapor Fraction		0.00	0.00	0.00	1.00	0.00	1.00	1.00
Ethanol	kg/hr	0		0		0		0
Water	kg/hr	731		2,084		2,382		501
Glucose (SS)	kg/hr	7		0				
Xylose (SS)	kg/hr	36		2				
Arabinose (SS)	kg/hr	2		1				
Other Sugars (SS)	kg/hr	9		7				
Cellobiose (SS)	kg/hr	1		1		2		
Glucose Oligomers (SS)	kg/hr	2		7		10		
Xylose Oligomers (SS)	kg/hr	3		2		5		
Other Oligomers (SS)	kg/hr							
Corn Steep Liquor (SS)	kg/hr	1	30	3		28		6
(NH4)2SO4 (SS)	kg/hr							
NH4Acetate (SS)	kg/hr							
Others (Soluble Solids)	kg/hr	0		0		0		
Acetic Acid	kg/hr	4		7		10		1
Sulfuric Acid	kg/hr	1		1		1		0
Furfural	kg/hr	3		8		3		7
HMF	kg/hr	1		3		1		2
Carbon Dioxide	kg/hr	0		0		0		145
Methane	kg/hr							
Oxygen	kg/hr				4,395	0		4,292
Nitrogen	kg/hr				16,533	0		16,533
Ammonia	kg/hr	0		0			8	
NH4OH	kg/hr							
Others	kg/hr	2		14		17	0	0
Cellulose (IS)	kg/hr	86		0				
Xylan (IS)	kg/hr	2		0		2		
Arabinan (IS)	kg/hr	0		0		0		
Other Sugar Polymers (IS)	kg/hr	0		0				
Cellulase (IS)	kg/hr	0		1		1		
Biomass (IS)	kg/hr	0		0		48		
Zymo (IS)	kg/hr	0		2		2		
Lignin (IS)	kg/hr	61		2		62		
Gypsum (IS)	kg/hr	0		0		0		
Ca(OH)2 (IS)	kg/hr							
Others (Insoluble Solids)	kg/hr	5		0		5		
Enthalpy Flow (millions)	Kcal/hr	-3.2	-0.1	-8.0	0.1	-9.5	0.0	-1.9
Average Density	g/ml	1.078	0.991	0.979	0.001	1.018	0.001	0.001

Heat Stream No.	MM kcal/hr
QF401-4	0.21

Work Stream No.	kW
WP401	0.75
WT402-3	364.67

Eq. No.	Equipment Name	Req.	Spare	Equipment Type	Mat Const.
F-401	1st Cellulase Seed Fermentor	3	0	VERTICAL-VESSEL	SS304
F-402	2nd Cellulase Seed Fermentor	3	0	VERTICAL-VESSEL	SS304
F-403	3rd Cellulase Seed Fermentor	3	0	VERTICAL-VESSEL	SS304
P-401	Cellulase Seed Pump	1	1	ROTARY-LOBE	SS316

VER	DESCRIPTION	DATE
A	SUBCONTRACTOR UPDATE	4/98
B	BASECASE UPDATE	9/98
C	DESIGN REPORT	2/99
D	FINAL 1999 DESIGN REPORT	6/99
		LL 6/23/99

NREL
NATIONAL RENEWABLE ENERGY LABORATORY
Biotechnology Center For Fuels And Chemicals

SECTION A400
CELLULASE SEED FERMENTATION

R9906A.xls | PFD-P100-A401 | D

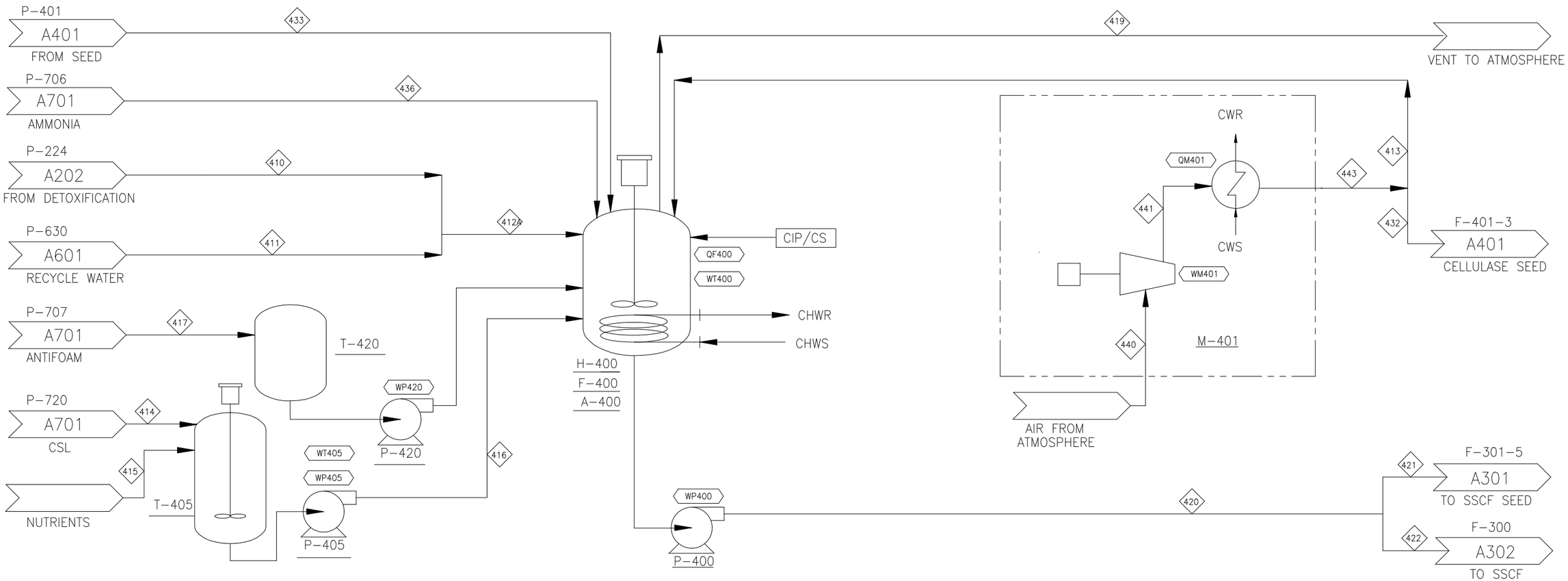

COMPONENT	UNITS	410	411	412A	413	414	415	416	417	419	420	421	422	432	433	436	440	441	443
Total Flow	kg/hr	18,176	22,784	40,960	301,966	406	174	580	227	307,253	39,217	3,922	35,296	20,928	2,580	157	322,894	322,894	322,894
Insoluble Solids	%	16.2%	0.2%	7.3%	0.0%	0.0%	0.0%	0.0%	0.0%	0.0%	5.6%	5.6%	5.6%	0.0%	4.7%	0.0%	0.0%	0.0%	0.0%
Soluble Solids	%	6.3%	1.1%	3.4%	0.0%	100.0%	0.0%	69.9%	0.0%	0.0%	1.7%	1.7%	1.7%	0.0%	1.7%	0.0%	0.0%	0.0%	0.0%
Temperature	C	59	47	48	40	28	28	28	28	28	28	28	28	40	28	28	20	169	40
Pressure	atm	1.00	1.00	1.00	1.00	1.00	1.00	1.00	1.00	1.66	1.66	1.66	1.66	1.00	1.00	1.00	1.00	3.00	1.00
Vapor Fraction		0.00	0.00	0.00	1.00	0.00	0.00	0.00	0.00	1.00	0.00	0.00	0.00	1.00	0.00	1.00	1.00	1.00	1.00
Ethanol	kg/hr	3	3	6						4	2	0	2		0				
Water	kg/hr	13,880	22,117	35,996						4,263	35,489	3,549	31,940		2,382				
Glucose (SS)	kg/hr	128	0	128															
Xylose (SS)	kg/hr	682	19	701															
Arabinose (SS)	kg/hr	32	15	47															
Other Sugars (SS)	kg/hr	167	77	244															
Cellobiose (SS)	kg/hr	16	10	26							28	3	25		2				
Glucose Oligomers (SS)	kg/hr	44	79	123							133	13	119		10				
Xylose Oligomers (SS)	kg/hr	49	26	75							80	8	72		5				
Other Oligomers (SS)	kg/hr																		
Corn Steep Liquor (SS)	kg/hr	19	33	52		406		406		52	433	43	390		28				
(NH4)2SO4 (SS)	kg/hr																		
NH4Acetate (SS)	kg/hr																		
Others (Soluble Solids)	kg/hr	1	1	2							2	0	2		0				
Acetic Acid	kg/hr	79	78	157						12	155	15	139		10				
Sulfuric Acid	kg/hr	14	8	22						0	24	2	21		1				
Furfural	kg/hr	50	81	131						77	58	6	52		3				
HMF	kg/hr	17	27	44						26	19	2	17		1				
Carbon Dioxide	kg/hr	0	0	0						2,950	1	0	0		0				
Methane	kg/hr																		
Oxygen	kg/hr				63,413					61,298	0	0	0	4,395	0		67,808	67,808	67,808
Nitrogen	kg/hr				238,553					238,552	1	0	1	16,533	0		255,086	255,086	255,086
Ammonia	kg/hr	0	2	2												145			
NH4OH	kg/hr																		
Others	kg/hr	46	154	199			174	174	227	19	598	60	538		17	12			
Cellulose (IS)	kg/hr	1,634	3	1,636															
Xylan (IS)	kg/hr	40	1	40							42	4	38		2				
Arabinan (IS)	kg/hr	2	0	2							2	0	2		0				
Other Sugar Polymers (IS)	kg/hr	9	0	9															
Cellulase (IS)	kg/hr	3	11	15							563	56	506		1				
Biomass (IS)	kg/hr	1	4	6							221	22	199		48				
Zymo (IS)	kg/hr	6	19	25							27	3	24		2				
Lignin (IS)	kg/hr	1,155	17	1,172							1,234	123	1,111		62				
Gypsum (IS)	kg/hr	0	0	0							0	0	0		0				
Ca(OH)2 (IS)	kg/hr																		
Others (Insoluble Solids)	kg/hr	99	1	101							106	11	96		5				
Enthalpy Flow (millions)	Kcal/hr	-60.5	-84.4	-145.1	1.1	-1.5	-0.7	-2.2	-0.1	-20.0	-142.6	-14.3	-128.4	0.1	-9.5	-0.1	-0.4	11.3	1.2
Average Density	g/ml	1.078	0.979	1.026	0.001	0.991	0.991	0.991	0.888	0.002	1.021	1.021	1.021	0.001	1.018	0.001	0.001	0.002	0.001

Heat Stream No.	MM kcal/hr
QF400	6.81
QM401	10.14

Work Stream No.	kW
WM401	13613.11
WP400	5.64
WP405	0.09
WP420	0.03
WT400	3490.56
WT405	255.56

Eq. No.	Equipment Name	Req.	Spare	Equipment Type	Mat Const.
A-400	Cellulase Fermentor Agitators	11	0	AXIAL-IMPELLER	SS304
F-400	Cellulase Fermentors	11	0	VERTICAL-VESSEL	SS304L
H-400	Cellulase Fermentation Cooler	11	0	IMMERSED-COIL	SS304
M-401	Fermentor Air Compressor Package	2	1	CENTRIFUGAL	CS
P-400	Cellulase Transfer Pump	1	1	CENTRIFUGAL	SS
P-405	Media Pump	1	1	CENTRIFUGAL	SS
P-420	Anti-foam Pump	1	1	CENTRIFUGAL	CS
T-405	Media-Prep Tank	1	0	VERTICAL-VESSEL	SS304
T-420	Anti-foam Tank	1	0	VERTICAL-VESSEL	POLYETHYLENE

VER	DESCRIPTION	DATE
A	SUBCONTRACTOR UPDATE	4/98
B	BASECASE UPDATE	9/98
C	DESIGN REPORT	2/99
D	FINAL 1999 DESIGN REPORT	6/99
		LL 6/23/99

NREL
NATIONAL RENEWABLE ENERGY LABORATORY
Biotechnology Center For Fuels And Chemicals

SECTION A400
CELLULASE PROD. FERMENTATION

R9906A.xls | PFD-P100-A402 | D

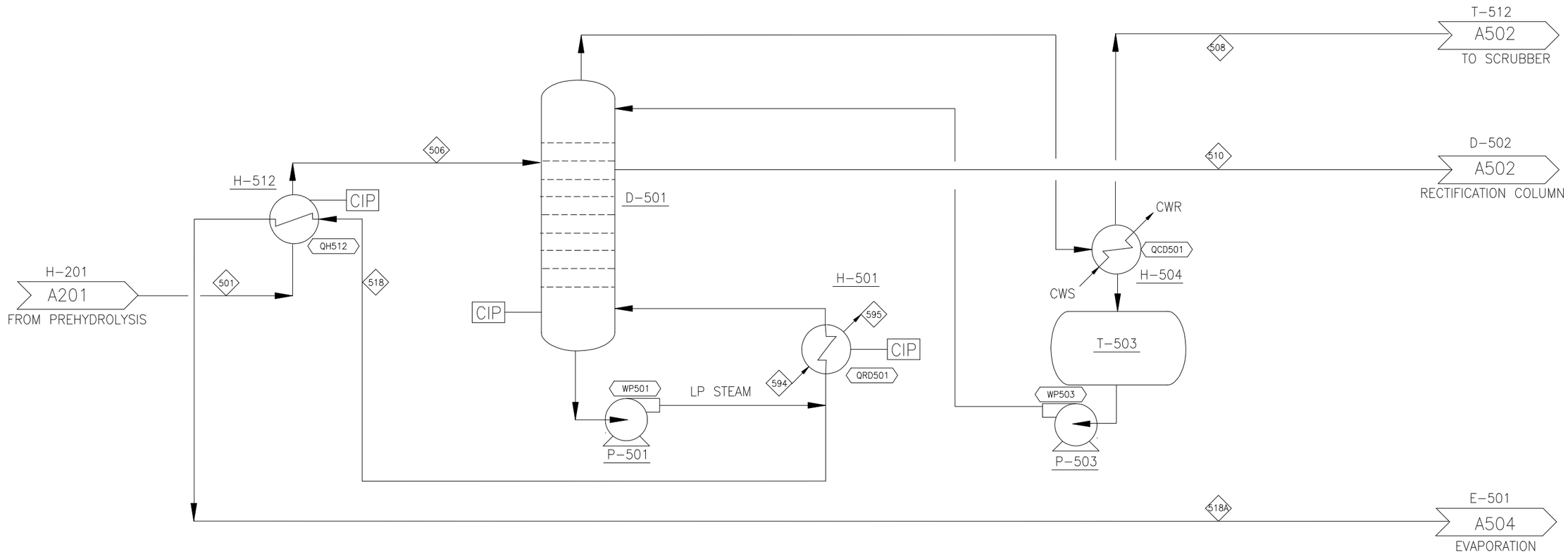

COMPONENT	UNITS	501	506	508	510	518	518A	594	595
Total Flow	kg/hr	380,209	380,209	582	49,456	330,171	330,171	54,459	54,459
Insoluble Solids	%	8.3%	8.3%	0.0%	0.0%	9.6%	9.6%	0.0%	0.0%
Soluble Solids	%	2.9%	2.9%	0.0%	0.5%	3.3%	3.3%	0.0%	0.0%
Temperature	C	95	100	60	114	122	117	164	148
Pressure	atm	4.00	4.76	1.86	1.93	2.10	2.10	4.42	4.42
Vapor Fraction		0.00	0.00	1.00	1.00	0.00	0.00	1.00	0.00
Ethanol	kg/hr	18,701	18,701	71	18,481	149	149		
Water	kg/hr	308,205	308,205	23	29,891	278,290	278,290	54,459	54,459
Glucose (SS)	kg/hr	219	219	0	0	219	219		
Xylose (SS)	kg/hr	721	721	0	0	721	721		
Arabinose (SS)	kg/hr	569	569	0	0	569	569		
Other Sugars (SS)	kg/hr	2,936	2,936	0	0	2,936	2,936		
Cellobiose (SS)	kg/hr	383	383	0	0	383	383		
Glucose Oligomers (SS)	kg/hr	3,021	3,021	0	0	3,021	3,021		
Xylose Oligomers (SS)	kg/hr	1,006	1,006	0	0	1,006	1,006		
Other Oligomers (SS)	kg/hr								
Corn Steep Liquor (SS)	kg/hr	2,327	2,327	0	227	2,100	2,100		
(NH4)2SO4 (SS)	kg/hr								
NH4Acetate (SS)	kg/hr								
Others (Soluble Solids)	kg/hr	29	29	0	0	29	29		
Acetic Acid	kg/hr	2,545	2,545	0	123	2,422	2,422		
Sulfuric Acid	kg/hr	295	295	0	0	295	295		
Furfural	kg/hr	1,010	1,010	0	524	485	485		
HMF	kg/hr	340	340	0	177	164	164		
Carbon Dioxide	kg/hr	487	487	487	0	0	0		
Methane	kg/hr								
Oxygen	kg/hr	0	0	0	0				
Nitrogen	kg/hr	0	0	0	0	0	0		
Ammonia	kg/hr	12	12	0	11	0	0		
NH4OH	kg/hr								
Others	kg/hr	5,787	5,787	0	21	5,766	5,766		
Cellulose (IS)	kg/hr	3,631	3,631			3,631	3,631		
Xylan (IS)	kg/hr	794	794			794	794		
Arabinan (IS)	kg/hr	33	33			33	33		
Other Sugar Polymers (IS)	kg/hr	164	164			164	164		
Cellulase (IS)	kg/hr	624	624			624	624		
Biomass (IS)	kg/hr	245	245			245	245		
Zymo (IS)	kg/hr	1,061	1,061			1,061	1,061		
Lignin (IS)	kg/hr	23,068	23,068			23,068	23,068		
Gypsum (IS)	kg/hr	8	8			8	8		
Ca(OH)2 (IS)	kg/hr								
Others (Insoluble Solids)	kg/hr	1,986	1,986			1,986	1,986		
Enthalpy Flow (millions)	Kcal/hr	-1295.5	-1293.6	-1.2	-117.8	-1147.5	-1149.3	-171.2	-199.3
Average Density	g/ml	0.971	0.966	0.003	0.001	0.965	0.970	0.002	0.865

Heat Stream No.	MM kcal/hr	Work Stream No.	kW
QCD501	0.89	WP501	260.94
QH512	-1.83	WP503	0.51
QRD501	-28.06		

Eq. No.	Equipment Name	Req.	Spare	Equipment Type	Mat Const.
D-501	Beer Column	1	0	DISTILLATION	SS304
H-501	Beer Column Reboiler	1	0	SHELL-TUBE	SS304;CS
H-504	Beer Column Condenser	1	0	SHELL-TUBE	SS304;CS
H-512	Beer Column Feed Interchange	1	1	PLATE-FRAME	SS
P-501	Beer Column Bottoms Pump	1	1	CENTRIFUGAL	SS
P-503	Beer Column Reflux Pump	1	1	CENTRIFUGAL	SS
T-503	Beer Column Relfux Drum	1	0	HORIZONTAL-VESSEL	SS304

VER	DESCRIPTION	DATE
A	SUBCONTRACTOR UPDATE	4/98
B	BASECASE UPDATE	9/98
C	DESIGN REPORT	2/99
D	FINAL 1999 DESIGN REPORT	6/99
		LL 6/23/99

NREL
NATIONAL RENEWABLE ENERGY LABORATORY
Biotechnology Center For Fuels And Chemicals

SECTION A500
BEER DISTILLATION

R9906A.xls | PFD-P100-A501 | D

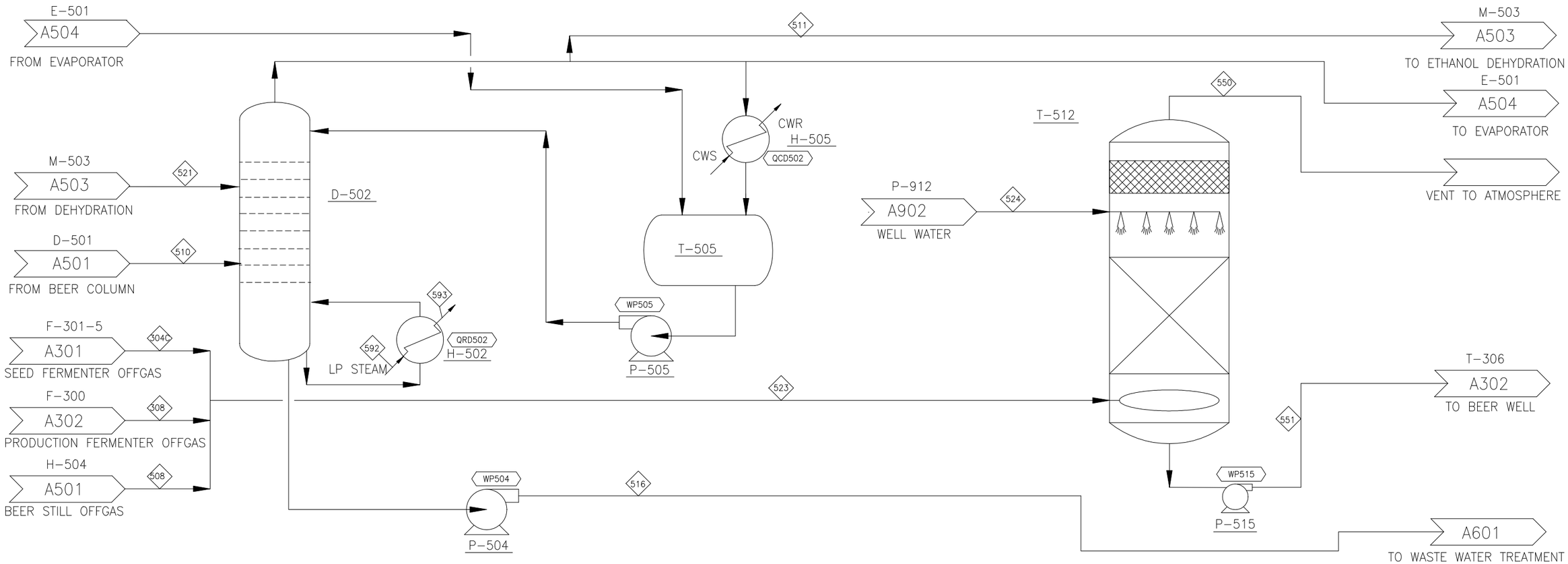

COMPONENT	UNITS	304C	308	508	510	511	516	521	523	524	550	551	592	593
Total Flow	kg/hr	876	16,978	582	49,456	24,982	30,898	6,425	18,437	13,042	17,916	13,562	6,814	6,814
Insoluble Solids	%	0.0%	0.0%	0.0%	0.0%	0.0%	0.0%	0.0%	0.0%	0.0%	0.0%	0.0%	0.0%	0.0%
Soluble Solids	%	0.0%	0.0%	0.0%	0.5%	0.0%	0.7%	0.0%	0.0%	0.0%	0.0%	0.0%	0.0%	0.0%
Temperature	C	30	30	60	114	92	121	70	31	13	18	30	164	148
Pressure	atm	1.00	1.00	1.86	1.93	1.70	2.06	1.53	1.00	1.00	0.90	0.90	4.42	4.42
Vapor Fraction		1.00	1.00	1.00	1.00	1.00	0.00	0.00	1.00	0.00	1.00	0.00	1.00	0.00
Ethanol	kg/hr	7	263	71	18,481	23,108	15	4,643	341		5	337		
Water	kg/hr	15	288	23	29,891	1,874	29,800	1,782	326	13,042	173	13,195	6,814	6,814
Glucose (SS)	kg/hr			0	0		0		0					
Xylose (SS)	kg/hr			0	0		0		0					
Arabinose (SS)	kg/hr			0	0		0		0					
Other Sugars (SS)	kg/hr			0	0		0		0					
Cellobiose (SS)	kg/hr			0	0		0		0					
Glucose Oligomers (SS)	kg/hr			0	0		0		0					
Xylose Oligomers (SS)	kg/hr			0	0		0		0					
Other Oligomers (SS)	kg/hr													
Corn Steep Liquor (SS)	kg/hr	0	2	0	227		227		3		0	3		
(NH4)2SO4 (SS)	kg/hr													
NH4Acetate (SS)	kg/hr													
Others (Soluble Solids)	kg/hr			0	0		0		0					
Acetic Acid	kg/hr	0	1	0	123		123		2		0	2		
Sulfuric Acid	kg/hr	0	0	0	0		0		0		0	0		
Furfural	kg/hr	0	6	0	524		524		7		0	7		
HMF	kg/hr	0	2	0	177		177		2		0	2		
Carbon Dioxide	kg/hr	838	16,281	487	0		0		17,605		17,589	16		
Methane	kg/hr													
Oxygen	kg/hr	15	134	0	0				149		149	0		
Nitrogen	kg/hr	0	1	0	0				1		1	0		
Ammonia	kg/hr		0	0	11		11		0		0	0		
NH4OH	kg/hr													
Others	kg/hr	0	0	0	21		21		0		0	0		
Cellulose (IS)	kg/hr													
Xylan (IS)	kg/hr													
Arabinan (IS)	kg/hr													
Other Sugar Polymers (IS)	kg/hr													
Cellulase (IS)	kg/hr													
Biomass (IS)	kg/hr													
Zymo (IS)	kg/hr													
Lignin (IS)	kg/hr													
Gypsum (IS)	kg/hr													
Ca(OH)2 (IS)	kg/hr													
Others (Insoluble Solids)	kg/hr													
Enthalpy Flow (millions)	Kcal/hr	-1.8	-36.0	-1.2	-117.8	-33.5	-111.4	-13.2	-39.1	-49.5	-38.1	-50.4	-21.4	-24.9
Average Density	g/ml	0.002	0.002	0.003	0.001	0.002	0.900	0.794	0.002	1.005	0.002	0.983	0.002	0.865

Heat Stream No.	MM kcal/hr
QCD502	17.44
QRD502	-3.51

Work Stream No.	kW
WP504	7.62
WP505	12.77
WP515	2.21

Eq. No.	Equipment Name	Req.	Spare	Equipment Type	Mat Const.
D-502	Rectification Column	1	0	DISTILLATION	SS
H-502	Rectification Column Reboiler	1	0	SHELL-TUBE	SS304;CS
H-505	Rectification Column Condenser	1	0	SHELL-TUBE	SS304;CS
P-504	Rectification Column Bottoms Pump	1	1	CENTRIFUGAL	SS
P-505	Rectification Column Reflux Pump	1	1	CENTRIFUGAL	SS
P-515	Scrubber Bottoms Pump	1	0	CENTRIFUGAL	SS
T-505	Rectification Column Reflux Drum	1	0	HORIZONTAL-VESSEL	SS304
T-512	Vent Scrubber	1	0	ABSORBER	SS304;PLASTIC

VER	DESCRIPTION	DATE
A	SUBCONTRACTOR UPDATE	4/98
B	BASECASE UPDATE	9/98
C	DESIGN REPORT	2/99
D	FINAL 1999 DESIGN REPORT	6/99
		LL 6/24/99

NREL
NATIONAL RENEWABLE ENERGY LABORATORY
Biotechnology Center For Fuels And Chemicals

SECTION A500
RECTIFICATION DISTILLATION

R9906A.xls | PFD-P100-A502 | D

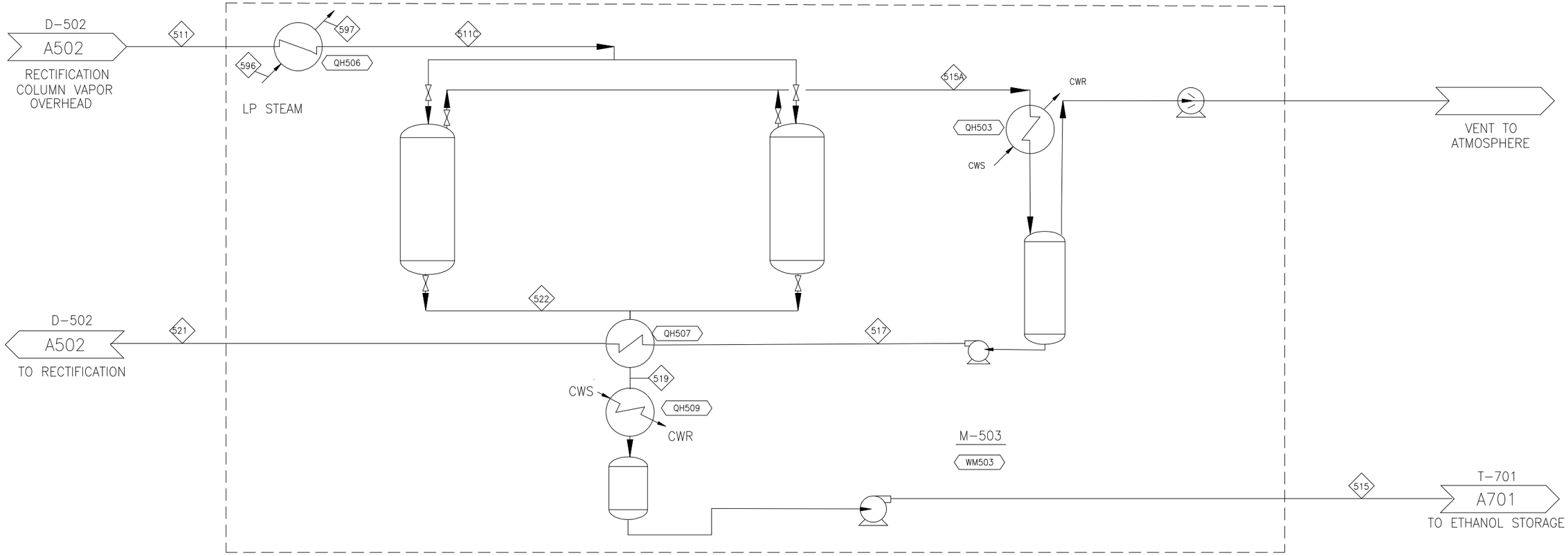

COMPONENT	UNITS	511	511C	515	515A	517	519	521	522	596	597
Total Flow	kg/hr	24,982	24,982	18,557	6,425	6,425	18,557	6,425	6,425	467	467
Insoluble Solids	%	0.0%	0.0%	0.0%	0.0%	0.0%	0.0%	0.0%	0.0%	0.0%	0.0%
Soluble Solids	%	0.0%	0.0%	0.0%	0.0%	0.0%	0.0%	0.0%	0.0%	0.0%	0.0%
Temperature	C	92	116	38	116	35	92	70	70	164	148
Pressure	atm	1.70	1.70	1.00	1.70	0.14	1.44	1.53	1.53	4.42	4.42
Vapor Fraction		1.00	1.00	0.00	1.00	0.00	1.00	0.00	0.00	1.00	0.00
Ethanol	kg/hr	23,108	23,108	18,466	4,643	4,643	18,466	4,643	4,643		
Water	kg/hr	1,874	1,874	92	1,782	1,782	92	1,782	1,782	467	467
Glucose (SS)	kg/hr										
Xylose (SS)	kg/hr										
Arabinose (SS)	kg/hr										
Other Sugars (SS)	kg/hr										
Cellobiose (SS)	kg/hr										
Glucose Oligomers (SS)	kg/hr										
Xylose Oligomers (SS)	kg/hr										
Other Oligomers (SS)	kg/hr										
Corn Steep Liquor (SS)	kg/hr										
(NH4)2SO4 (SS)	kg/hr										
NH4Acetate (SS)	kg/hr										
Others (Soluble Solids)	kg/hr										
Acetic Acid	kg/hr										
Sulfuric Acid	kg/hr										
Furfural	kg/hr										
HMF	kg/hr										
Carbon Dioxide	kg/hr										
Methane	kg/hr										
Oxygen	kg/hr										
Nitrogen	kg/hr										
Ammonia	kg/hr										
NH4OH	kg/hr										
Others	kg/hr										
Cellulose (IS)	kg/hr										
Xylan (IS)	kg/hr										
Arabinan (IS)	kg/hr										
Other Sugar Polymers (IS)	kg/hr										
Cellulase (IS)	kg/hr										
Biomass (IS)	kg/hr										
Zymo (IS)	kg/hr										
Lignin (IS)	kg/hr										
Gypsum (IS)	kg/hr										
Ca(OH)2 (IS)	kg/hr										
Others (Insoluble Solids)	kg/hr										
Enthalpy Flow (millions)	Kcal/hr	-33.5	-33.3	-26.7	-11.1	-13.4	-22.3	-13.2	-13.2	-1.5	-1.7
Average Density	g/ml	0.002	0.002	0.775	0.002	0.831	0.002	0.794	0.794	0.002	0.865

Heat Stream No.	MM kcal/hr
QH503	2.22
QH506	-0.24
QH507	0.18
QH509	4.41

Work Stream No.	kW
WM503	128.99

Eq. No.	Equipment Name	Req.	Spare	Equipment Type	Mat Const.
M-503	Molecular Sieve (9 pieces)	1	0	PACKAGE	SS

VER	DESCRIPTION	DATE
A	SUBCONTRACTOR UPDATE	4/98
B	BASECASE UPDATE	9/98
C	DESIGN REPORT	2/99
D	FINAL 1999 DESIGN REPORT	6/99
		LL 6/24/99

NREL
NATIONAL RENEWABLE ENERGY LABORATORY
Biotechnology Center For Fuels And Chemicals

SECTION A500
ETHANOL DEHYDRATION

R9906A.xls | PFD-P100-A503 | D

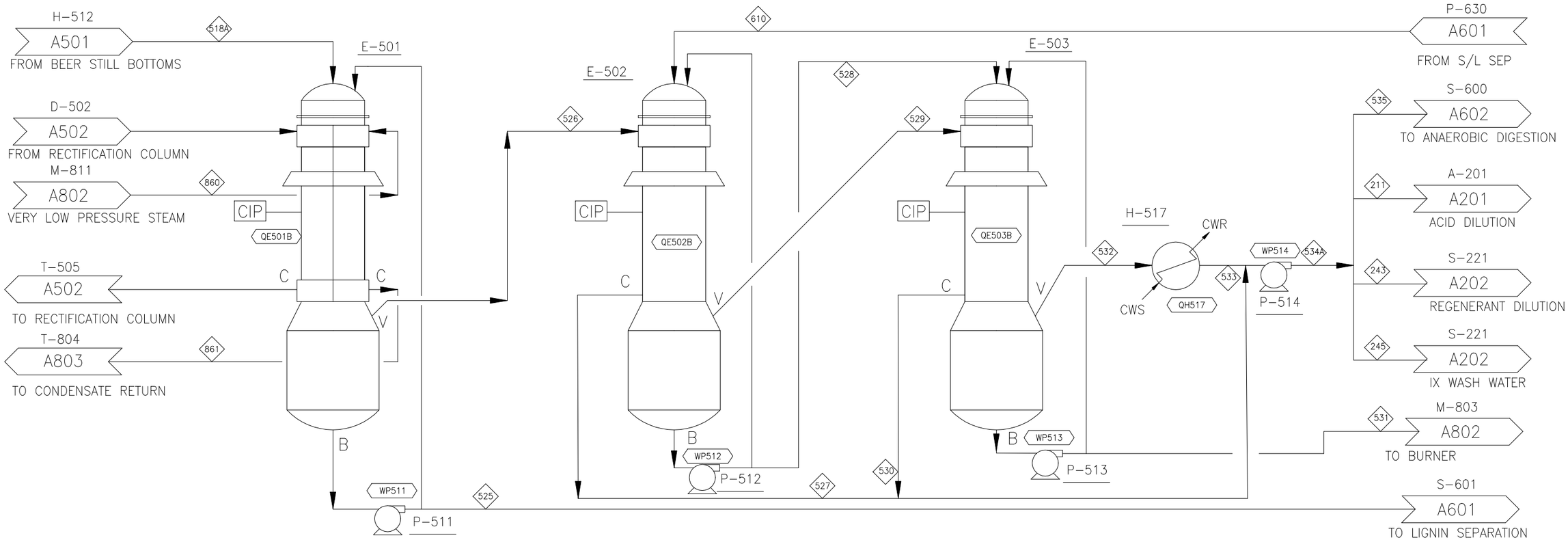

COMPONENT	UNITS	211	243	245	518A	525	526	527	528	529	530	531	532	533	534A	535	610
Total Flow	kg/hr	47,637	65,828	29,862	330,171	269,333	60,838	60,838	75,972	52,320	52,320	24,371	51,601	51,601	164,760	16,476	128,292
Insoluble Solids	%	0.0%	0.0%	0.0%	9.6%	11.7%	0.0%	0.0%	1.5%	0.0%	0.0%	4.8%	0.0%	0.0%	0.0%	0.0%	0.9%
Soluble Solids	%	0.3%	0.0%	0.3%	3.3%	3.9%	0.7%	0.7%	6.1%	0.0%	0.0%	19.1%	0.0%	0.0%	0.3%	0.3%	3.6%
Temperature	C	74	73	74	117	86	86	86	70	70	70	63	63	63	74	74	40
Pressure	atm	3.00	3.00	3.00	2.10	0.58	0.58	0.60	0.30	0.30	0.31	0.21	0.21	0.23	2.00	2.00	3.20
Vapor Fraction		0.00	0.00	0.00	0.00	0.00	1.00	0.00	0.00	1.00	0.00	0.00	1.00	0.00	0.00	0.00	0.00
Ethanol	kg/hr	38		24	149	36	114	114	2	17	17	0	2	2	133	13	19
Water	kg/hr	47,092	65,828	29,520	278,290	218,600	59,690	59,690	65,773	52,037	52,037	14,626	51,147	51,147	162,874	16,287	117,809
Glucose (SS)	kg/hr				219	219											
Xylose (SS)	kg/hr	0		0	721	721	0	0	388	0	0	388	0	0	0	0	388
Arabinose (SS)	kg/hr	0		0	569	569	0	0	307			307	0	0	0	0	307
Other Sugars (SS)	kg/hr				2,936	2,936			1,583			1,583					1,583
Cellobiose (SS)	kg/hr				383	383			207			207					207
Glucose Oligomers (SS)	kg/hr				3,021	3,021			1,628			1,628					1,628
Xylose Oligomers (SS)	kg/hr	0		0	1,006	1,006	0	0	542	0	0	542	0	0	0	0	542
Other Oligomers (SS)	kg/hr																
Corn Steep Liquor (SS)	kg/hr	130		82	2,100	1,649	450	450							450	45	
(NH4)2SO4 (SS)	kg/hr																
NH4Acetate (SS)	kg/hr																
Others (Soluble Solids)	kg/hr				29	29			11			11					11
Acetic Acid	kg/hr	205		129	2,422	2,295	127	127	1,077	159	159	653	424	424	711	71	1,237
Sulfuric Acid	kg/hr	0		0	295	295	0	0	159	0	0	159	0	0	0	0	159
Furfural	kg/hr	117		73	485	173	312	312	16	78	78	1	14	14	404	40	93
HMF	kg/hr	39		25	164	58	105	105	5	26	26	0	5	5	136	14	31
Carbon Dioxide	kg/hr				0												
Methane	kg/hr																
Oxygen	kg/hr																
Nitrogen	kg/hr				0												
Ammonia	kg/hr	0		0	0	0	0	0	0	0	0	0	0	0	0	0	0
NH4OH	kg/hr																
Others	kg/hr	15		9	5,766	5,726	40	40	3,105	3	3	3,096	9	9	52	5	3,108
Cellulose (IS)	kg/hr				3,631	3,631			54			54					54
Xylan (IS)	kg/hr				794	794			12			12					12
Arabinan (IS)	kg/hr				33	33			0			0					0
Other Sugar Polymers (IS)	kg/hr				164	164			2			2					2
Cellulase (IS)	kg/hr				624	624			234			234					234
Biomass (IS)	kg/hr				245	245			92			92					92
Zymo (IS)	kg/hr				1,061	1,061			398			398					398
Lignin (IS)	kg/hr				23,068	23,068			346			346					346
Gypsum (IS)	kg/hr				8	8			0			0					0
Ca(OH)2 (IS)	kg/hr																
Others (Insoluble Solids)	kg/hr				1,986	1,986			30			30					30
Enthalpy Flow (millions)	Kcal/hr	-177.2	-246.3	-111.1	-1149.3	-935.3	-192.0	-224.9	-264.0	-166.2	-195.2	-71.7	-163.9	-192.6	-612.8	-61.3	-462.5
Average Density	g/ml	0.945	0.945	0.945	0.970	1.021	0.000	0.934	0.992	0.000	0.949	1.094	0.000	0.955	0.945	0.945	1.000

Stream No.	MM kcal/hr	Stream No.	kW
QE501B	22.03	WP511	173.06
QE502B	32.29	WP512	35.69
QE503B	28.39	WP513	14.36
QH517	28.70	WP514	27.93

Eq. No.	Equipment Name	Req.	Spare	Equipment Type	Mat Const.
E-501	1st Effect Evaporation	2	0	SHELL-TUBE	SS316
E-502	2nd Effect Evaporation	1	0	SHELL-TUBE	SS316
E-503	3rd Effect Evaporation	2	0	SHELL-TUBE	SS316
H-517	Evaporator Condenser	1	1	SHELL-TUBE	SS304;CS
P-511	1st Effect Pump	2	1	CENTRIFUGAL	SS
P-512	2nd Effect Pump	1	1	CENTRIFUGAL	SS
P-513	3rd Effect Pump	2	1	CENTRIFUGAL	SS
P-514	Evaporator Condensate Pump	1	1	CENTRIFUGAL	SS304

VER	DESCRIPTION	DATE
A	SUBCONTRACTOR UPDATE	4/98
B	BASECASE UPDATE	9/98
C	DESIGN REPORT	2/99
D	FINAL 1999 DESIGN REPORT	6/99
		LL 6/24/99

NATIONAL RENEWABLE ENERGY LABORATORY
Biotechnology Center For Fuels And Chemicals

SECTION A500
EVAPORATOR

R9906A.xls | PFD-P100-A504 | D

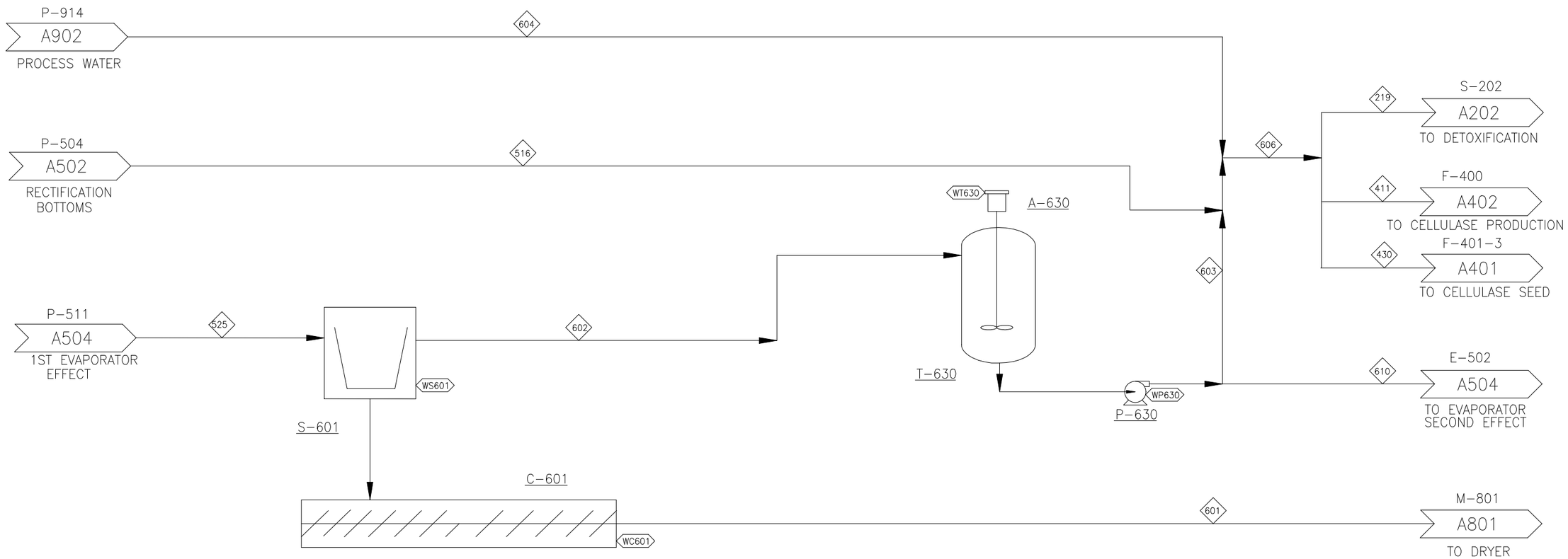

COMPONENT	UNITS	219	411	430	516	525	601	602	603	604	606	610
Total Flow	kg/hr	131,896	22,784	2,147	30,898	269,333	98,277	171,056	42,764	83,163	156,827	128,292
Insoluble Solids	%	0.2%	0.2%	0.2%	0.0%	11.7%	30.6%	0.9%	0.9%	0.0%	0.2%	0.9%
Soluble Solids	%	1.1%	1.1%	1.1%	0.7%	3.9%	4.4%	3.6%	3.6%	0.0%	1.1%	3.6%
Temperature	C	47	47	47	121	86	40	40	40	20	47	40
Pressure	atm	1.00	1.00	1.00	2.06	0.58	3.20	3.20	3.20	1.00	1.00	3.20
Vapor Fraction		0.00	0.00	0.00	0.00	0.00	0.00	0.00	0.00	0.00	0.00	0.00
Ethanol	kg/hr	18	3	0	15	36	10	26	6		22	19
Water	kg/hr	128,033	22,117	2,084	29,800	218,600	61,520	157,079	39,270	83,163	152,234	117,809
Glucose (SS)	kg/hr	0	0	0	0	219	219				0	
Xylose (SS)	kg/hr	109	19	2	0	721	203	518	129		129	388
Arabinose (SS)	kg/hr	86	15	1	0	569	160	409	102		102	307
Other Sugars (SS)	kg/hr	444	77	7	0	2,936	826	2,110	528		528	1,583
Cellobiose (SS)	kg/hr	58	10	1	0	383	108	275	69		69	207
Glucose Oligomers (SS)	kg/hr	456	79	7	0	3,021	850	2,171	543		543	1,628
Xylose Oligomers (SS)	kg/hr	152	26	2	0	1,006	283	723	181		181	542
Other Oligomers (SS)	kg/hr											
Corn Steep Liquor (SS)	kg/hr	191	33	3	227	1,649	1,649				227	
(NH4)2SO4 (SS)	kg/hr											
NH4Acetate (SS)	kg/hr											
Others (Soluble Solids)	kg/hr	3	1	0	0	29	14	14	4		4	11
Acetic Acid	kg/hr	450	78	7	123	2,295	646	1,649	412		535	1,237
Sulfuric Acid	kg/hr	45	8	1	0	295	83	212	53		53	159
Furfural	kg/hr	467	81	8	524	173	49	125	31		556	93
HMF	kg/hr	157	27	3	177	58	16	42	10		187	31
Carbon Dioxide	kg/hr	0	0	0	0						0	
Methane	kg/hr											
Oxygen	kg/hr											
Nitrogen	kg/hr											
Ammonia	kg/hr	10	2	0	11	0	0	0	0		11	0
NH4OH	kg/hr											
Others	kg/hr	889	154	14	21	5,726	1,582	4,144	1,036		1,057	3,108
Cellulose (IS)	kg/hr	15	3	0		3,631	3,559	73	18		18	54
Xylan (IS)	kg/hr	3	1	0		794	778	16	4		4	12
Arabinan (IS)	kg/hr	0	0	0		33	32	1	0		0	0
Other Sugar Polymers (IS)	kg/hr	1	0	0		164	161	3	1		1	2
Cellulase (IS)	kg/hr	66	11	1		624	312	312	78		78	234
Biomass (IS)	kg/hr	26	4	0		245	123	123	31		31	92
Zymo (IS)	kg/hr	112	19	2		1,061	531	531	133		133	398
Lignin (IS)	kg/hr	97	17	2		23,068	22,607	461	115		115	346
Gypsum (IS)	kg/hr	0	0	0		8	8	0	0		0	0
Ca(OH)2 (IS)	kg/hr											
Others (Insoluble Solids)	kg/hr	8	1	0		1,986	1,946	40	10		10	30
Enthalpy Flow (millions)	Kcal/hr	-488.6	-84.4	-8.0	-111.4	-935.3	-328.5	-616.7	-154.2	-315.4	-581.0	-462.5
Average Density	g/ml	0.979	0.979	0.979	0.900	1.021	1.158	1.000	1.000	0.998	0.979	1.000

Heat Stream No.	MM kcal/hr

Work Stream No.	kW
WC601	62.80
WP630	39.16
WS601	958.86
WT630	4.50

Eq. No.	Equipment Name	Req.	Spare	Equipment Type	Mat Const.
A-630	Recycled Water Tank Agitator	1	0	FIXED-PROP	CS
C-601	Lignin Wet Cake Screw	1	0	SCREW	CS
P-630	Recycled Water Pump	1	1	CENTRIFUGAL	CS
S-601	Beer Column Bottoms Centrifuge	3	0	CENTRIFUGE	316SS
T-630	Recycled Water Tank	1	0	FLAT-BTM-STORAGE	CS

VER	DESCRIPTION	DATE
A	SUBCONTRACTOR UPDATE	4/98
B	BASECASE UPDATE	9/98
C	WWT UPDATE	11/98
D	DESIGN REPORT	2/99
E	FINAL 1999 DESIGN REPORT	6/99
		LL 6/24/99

NREL NATIONAL RENEWABLE ENERGY LABORATORY
Biotechnology Center For Fuels And Chemicals

SECTION A600
LIGNIN SEPARATION & RECYCLE

R9906A.xls | PFD-P100-A601 | E

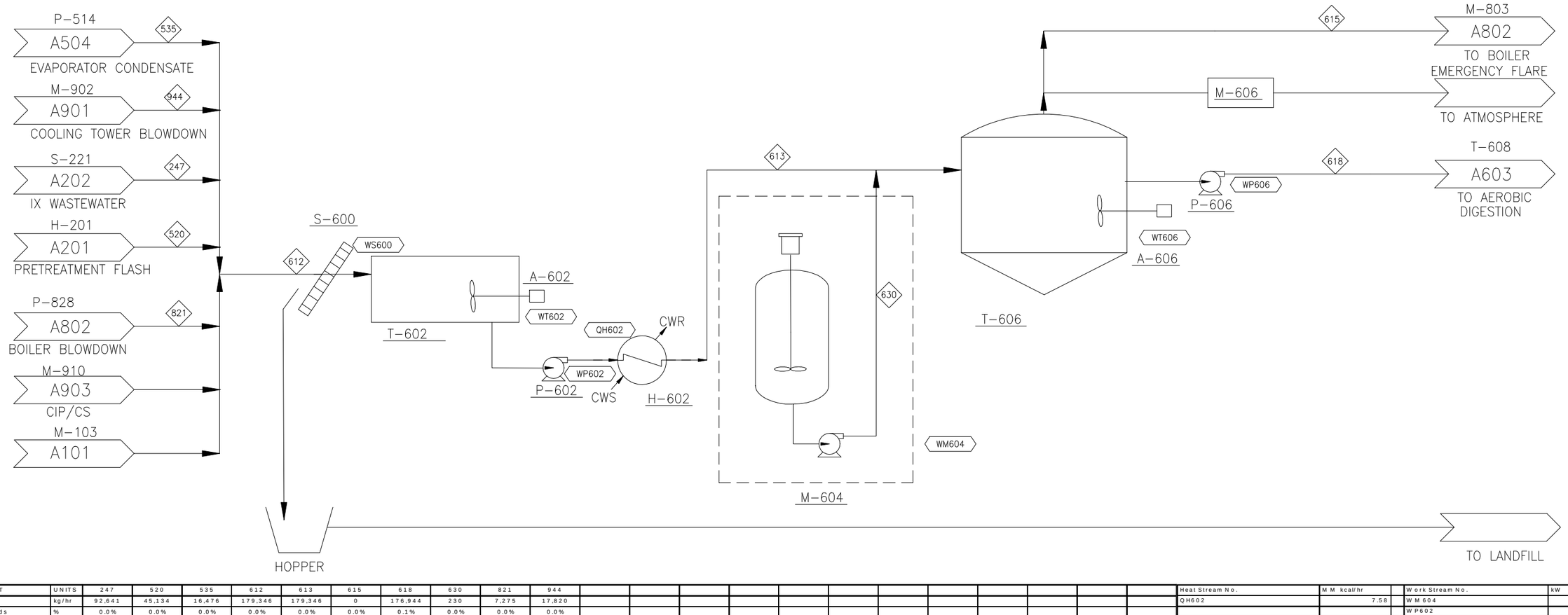

COMPONENT	UNITS	247	520	535	612	613	615	618	630	821	944
Total Flow	kg/hr	92,641	45,134	16,476	179,346	179,346	0	176,944	230	7,275	17,820
Insoluble Solids	%	0.0%	0.0%	0.0%	0.0%	0.0%	0.0%	0.1%	0.0%	0.0%	0.0%
Soluble Solids	%	4.9%	0.1%	0.3%	2.6%	2.6%	0.0%	0.2%	0.0%	0.0%	0.0%
Temperature	C	40	100	74	79	35		35	20	309	28
Pressure	atm	3.00	1.00	2.00	2.00	2.00		1.00	1.00	96.26	1.00
Vapor Fraction		0.00	0.07	0.00	0.00	0.00	0.00	0.00	0.00	0.00	0.00
Ethanol	kg/hr		29	13	42	42		3			
Water	kg/hr	87,893	43,822	16,287	173,098	173,098		175,675		7,275	17,820
Glucose (SS)	kg/hr										
Xylose (SS)	kg/hr		0	0	0	0		0			
Arabinose (SS)	kg/hr		0	0	0	0					
Other Sugars (SS)	kg/hr										
Cellobiose (SS)	kg/hr										
Glucose Oligomers (SS)	kg/hr										
Xylose Oligomers (SS)	kg/hr		0	0	0	0					
Other Oligomers (SS)	kg/hr										
Corn Steep Liquor (SS)	kg/hr		31	45	76	76		76			
(NH4)2SO4 (SS)	kg/hr	915			915	915					
NH4Acetate (SS)	kg/hr	3,606			3,606	3,606		252			
Others (Soluble Solids)	kg/hr										
Acetic Acid	kg/hr		265	71	336	336		24			
Sulfuric Acid	kg/hr		0	0	0	0					
Furfural	kg/hr		736	40	777	777		54			
HMF	kg/hr		248	14	262	262		18			
Carbon Dioxide	kg/hr							46			
Methane	kg/hr							2			
Oxygen	kg/hr										
Nitrogen	kg/hr										
Ammonia	kg/hr	7	0	0	7	7		7			
NH4OH	kg/hr	219			219	219		189			
Others	kg/hr		3	5	8	8		429	230		
Cellulose (IS)	kg/hr										
Xylan (IS)	kg/hr										
Arabinan (IS)	kg/hr										
Other Sugar Polymers (IS)	kg/hr										
Cellulase (IS)	kg/hr										
Biomass (IS)	kg/hr							169			
Zymo (IS)	kg/hr										
Lignin (IS)	kg/hr										
Gypsum (IS)	kg/hr										
Ca(OH)2 (IS)	kg/hr										
Others (Insoluble Solids)	kg/hr										
Enthalpy Flow (millions)	Kcal/hr	-347.3	-162.2	-61.3	-663.5	-671.1		-666.4	-0.9	-25.3	-67.4
Average Density	g/ml	0.914	0.009	0.945	0.910	0.950		0.982	0.998	0.693	0.991

Heat Stream No.	MM kcal/hr
QH602	7.58

Work Stream No.	kW
WM604	7.64
WP602	43.15
WP606	41.17
WS600	0.77
WT602	25.56
WT606	123.43

Eq. No.	Equipment Name	Req.	Spare	Equipment Type	Mat Const.
A-602	Equalization Basin Agitator	1	0	FIXED-PROP	SS
A-606	Anaerobic Agitator	4	0	FIXED-PROP	SS
H-602	Anaerobic Digestor Feed Cooler	1	0	SHELL-TUBE	SS316;CS
M-604	Nutrient Feed System	1	0	PACKAGE	CS
M-606	Biogas Emergency Flare	1	0	MISCELLANEOUS	SS
P-602	Anaerobic Reactor Feed Pump	1	1	CENTRIFUGAL	CS
P-606	Aerobic Digestor Feed Pump	1	1	CENTRIFUGAL	CS
S-600	Bar Screen	1	0	SCREEN	CS
T-602	Equalization Basin	1	0	FLAT-BTM-STORAGE	CONCRETE
T-606	Anaerobic Digestor	4	0	FLAT-BTM-STORAGE	EPOXY-LINED

VER	DESCRIPTION	DATE
A	SUBCONTRACTOR UPDATE	4/98
B	BASECASE UPDATE	9/98
C	WWT UPDATE	11/98
D	DESIGN REPORT	2/99
E	FINAL 1999 DESIGN REPORT	6/99
		LL 6/24/99

NREL
NATIONAL RENEWABLE ENERGY LABORATORY
Biotechnology Center For Fuels And Chemicals

SECTION A600
ANAEROBIC DIGESTION

R9906A.xls | PFD-P100-A602 | E

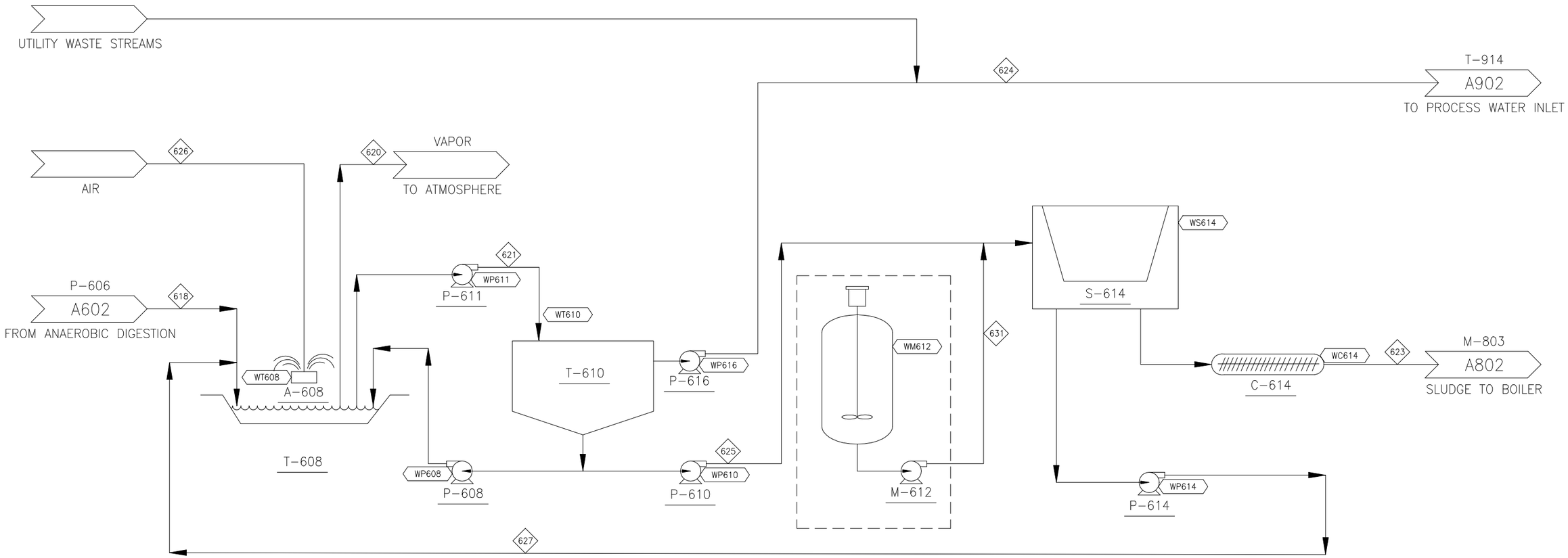

COMPONENT	UNITS	618	620	621	623	624	625	626	627	631
Total Flow	kg/hr	176,944	156,028	178,667	918	173,154	5,513	153,155	4,596	1
Insoluble Solids	%	0.1%	0.0%	0.2%	29.9%	0.0%	5.0%	0.0%	0.0%	0.0%
Soluble Solids	%	0.2%	0.0%	0.1%	0.0%	0.1%	0.1%	0.0%	0.1%	0.0%
Temperature	C	35	21	21	21	21	21	20	21	20
Pressure	atm	1.00	1.00	1.00	1.00	1.00	1.00	1.00	1.00	1.00
Vapor Fraction		0.00	1.00	0.00	0.00	0.00	0.00	1.00	0.00	0.00
Ethanol	kg/hr	3	0	0	0	0	0		0	
Water	kg/hr	175,675	2,430	177,981	641	172,755	5,226		4,584	
Glucose (SS)	kg/hr									
Xylose (SS)	kg/hr	0								
Arabinose (SS)	kg/hr									
Other Sugars (SS)	kg/hr									
Cellobiose (SS)	kg/hr									
Glucose Oligomers (SS)	kg/hr									
Xylose Oligomers (SS)	kg/hr									
Other Oligomers (SS)	kg/hr									
Corn Steep Liquor (SS)	kg/hr	76	1	77	0	75	2		2	
(NH4)2SO4 (SS)	kg/hr									
NH4Acetate (SS)	kg/hr	252		25	0	25	1		1	
Others (Soluble Solids)	kg/hr									
Acetic Acid	kg/hr	24	0	2	0	2	0		0	
Sulfuric Acid	kg/hr									
Furfural	kg/hr	54	1	5	0	4	0		0	
HMF	kg/hr	18	0	2	0	1	0		0	
Carbon Dioxide	kg/hr	46	341	0	0	0	0		0	
Methane	kg/hr	2	2	0	0	0	0		0	
Oxygen	kg/hr		31,898	1	0	1	0	32,162	0	
Nitrogen	kg/hr		121,017	3	0	3	0	120,992	0	
Ammonia	kg/hr	7	1	6	0	5	0		0	
NH4OH	kg/hr	189	157	33	0	32	1		1	
Others	kg/hr	429	179	257	1	250	8		7	1
Cellulose (IS)	kg/hr									
Xylan (IS)	kg/hr									
Arabinan (IS)	kg/hr									
Other Sugar Polymers (IS)	kg/hr									
Cellulase (IS)	kg/hr									
Biomass (IS)	kg/hr	169		275	275		275			
Zymo (IS)	kg/hr									
Lignin (IS)	kg/hr									
Gypsum (IS)	kg/hr									
Ca(OH)2 (IS)	kg/hr									
Others (Insoluble Solids)	kg/hr									
Enthalpy Flow (millions)	Kcal/hr	-666.4	-8.8	-676.4	-2.7	-656.2	-20.1	-0.2	-17.4	0.0
Average Density	g/ml	0.982	0.001	0.998	1.148	0.997	1.022	0.001	0.997	0.998

Heat Stream No.	MM kcal/hr

Work Stream No.	kW
WC614	5.25
WM612	3.83
WP608	1.24
WP610	0.73
WP611	40.92
WP614	1.05
WP616	39.68
WS614	21.31
WT608	619.00
WT610	3.82

Eq. No.	Equipment Name	Req.	Spare	Equipment Type	Mat Const.
A-608	Aerobic Lagoon Agitators	16	0	SURFACE-AERATOR	CS
C-614	Aerobic Sludge Screw	1	0	SCREW	CS
M-612	Filter Precoat System	1	0	MISCELLANEOUS	CS
P-608	Aerobic Sludge Recycle Pump	1	0	SLURRY	SS316
P-610	Aerobic Sludge Pump	1	0	SLURRY	SS316
P-611	Aerobic Digestion Outlet Pump	1	1	CENTRIFUGAL	CS
P-614	Sludge Filtrate Recycle Pump	1	1	CENTRIFUGAL	CS
P-616	Treated Water Pump	1	1	CENTRIFUGAL	CS
S-614	Belt Filter Press	1	0	FILTER-PRESS	304SS;BUNA N
T-608	Aerobic Digestor	1	0	LINED-PIT	POLYMER LINED
T-610	Clarifier	1	0	CLARIFIER	CONCRETE

VER	DESCRIPTION	DATE
A	SUBCONTRACTOR UPDATE	4/98
B	BASECASE UPDATE	9/98
C	WWT UPDATE	11/98
D	DESIGN REPORT	2/99
E	FINAL 1999 DESIGN REPORT	6/99
		LL 6/24/99

NREL
NATIONAL RENEWABLE ENERGY LABORATORY
Biotechnology Center For Fuels And Chemicals

SECTION A600
AEROBIC DIGESTION

R9906A.xls | PFD-P100-A603 | E

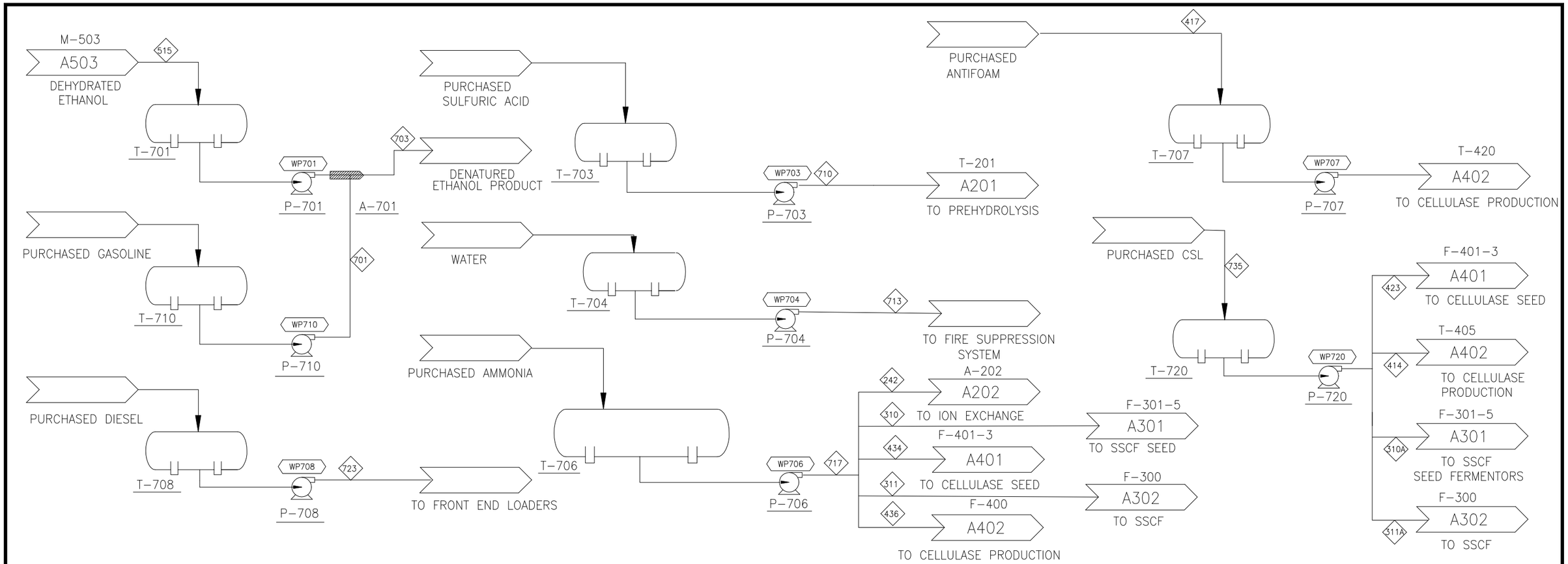

COMPONENT	UNITS	242	310	310A	311	311A	414	417	423	434	436	515	701	703	710	713	717	723	735
Total Flow	kg/hr	1,128	8	584	129	960	406	227	30	8	157	18,565	888	19,452	1,868	6,828	1,408	443	1,979
Insoluble Solids	%	0.0%	0.0%	0.0%	0.0%	0.0%	0.0%	0.0%	0.0%	0.0%	0.0%	0.0%	0.0%	0.0%	0.0%	0.0%	0.0%	0.0%	0.0%
Soluble Solids	%	0.0%	0.0%	100.0%	0.0%	100.0%	100.0%	0.0%	100.0%	0.0%	0.0%	0.0%	0.0%	0.0%	0.0%	0.0%	0.0%	0.0%	100.0%
Temperature	C	20	35	35	35	35	28	28	28	28	28	38	20	37	20	20	20	20	20
Pressure	atm	17.00	1.00	1.00	1.00	1.00	1.00	1.00	1.00	1.00	1.00	1.00	1.00	1.00	1.00	1.00	17.00	1.00	1.00
Vapor Fraction		0.00	1.00	0.00	1.00	0.00	0.00	0.00	0.00	1.00	1.00	0.00	0.00	0.00	0.00	0.00	0.00	0.00	0.00
Ethanol	kg/hr											18,473		18,473					
Water	kg/hr											92		92		6,828			
Glucose (SS)	kg/hr																		
Xylose (SS)	kg/hr																		
Arabinose (SS)	kg/hr																		
Other Sugars (SS)	kg/hr																		
Cellobiose (SS)	kg/hr																		
Glucose Oligomers (SS)	kg/hr																		
Xylose Oligomers (SS)	kg/hr																		
Other Oligomers (SS)	kg/hr																		
Corn Steep Liquor (SS)	kg/hr			584		960	406		30										1,979
(NH4)2SO4 (SS)	kg/hr																		
NH4Acetate (SS)	kg/hr																		
Others (Soluble Solids)	kg/hr																		
Acetic Acid	kg/hr																		
Sulfuric Acid	kg/hr														1,868				
Furfural	kg/hr																		
HMF	kg/hr																		
Carbon Dioxide	kg/hr																		
Methane	kg/hr																		
Oxygen	kg/hr																		
Nitrogen	kg/hr																		
Ammonia	kg/hr	1,128	8		129					8	145						1,408		
NH4OH	kg/hr																		
Others	kg/hr							227		0	12		888	888				443	
Cellulose (IS)	kg/hr																		
Xylan (IS)	kg/hr																		
Arabinan (IS)	kg/hr																		
Other Sugar Polymers (IS)	kg/hr																		
Cellulase (IS)	kg/hr																		
Biomass (IS)	kg/hr																		
Zymo (IS)	kg/hr																		
Lignin (IS)	kg/hr																		
Gypsum (IS)	kg/hr																		
Ca(OH)2 (IS)	kg/hr																		
Others (Insoluble Solids)	kg/hr																		
Enthalpy Flow (millions)	Kcal/hr	-1.0	0.0	-2.2	-0.1	-3.6	-1.5	-0.1	-0.1	0.0	-0.1	-26.8	-0.5	-27.2	-3.6	-25.9	-1.3	-0.2	-7.5
Average Density	g/ml	0.610	0.001	0.984	0.001	0.984	0.991	0.888	0.991	0.001	0.001	0.757	0.688	0.753	3.102	0.998	0.610	0.688	0.998

Heat Stream	Mmkcal/hr

Work Stream No.	kW
WP701	3.94
WP703	0.13
WP704	0.00
WP706	0.08
WP707	0.03
WP708	0.11
WP710	0.37
WP720	0.43

Eq. No.	Equipment Name	Req.	Spare	Equipment Type	Mat Const.
A-701	Denaturant In-line Mixer	1	0	STATIC	SS304
P-701	Ethanol Product Pump	2	1	CENTRIFUGAL	CS
P-703	Sulfuric Acid Pump	1	1	CENTRIFUGAL	SS316
P-704	Firewater Pump	1	1	CENTRIFUGAL	CS
P-706	Ammonia Pump	1	1	CENTRIFUGAL	CS
P-707	Antifoam Store Pump	1	1	CENTRIFUGAL	CS
P-708	Diesel Pump	1	1	CENTRIFUGAL	CS
P-710	Gasoline Pump	1	1	CENTRIFUGAL	CS
P-720	CSL Pump	1	1	CENTRIFUGAL	CS
T-701	Ethanol Product Storage Tank	2	0	FLAT-BTM-STORAGE	A285C
T-703	Sulfuric Acid Storage Tank	1	0	FLAT-BTM-STORAGE	SS316
T-704	Firewater Storage Tank	1	0	FLAT-BTM-STORAGE	A285C
T-706	Ammonia Storage Tank	1	0	HORIZONTAL-STORAGE	A515
T-707	Antifoam Storage Tank	1	0	FLAT-BTM-STORAGE	A285C
T-708	Diesel Storage Tank	1	0	FLAT-BTM-STORAGE	A285C
T-710	Gasoline Storage Tank	1	0	FLAT-BTM-STORAGE	A285C
T-720	CSL Storage Tank	1	0	FLAT-BTM-STORAGE	SS304

VER	DESCRIPTION	DATE
A	SUBCONTRACTOR UPDATE	4/98
B	BASECASE UPDATE	9/98
C	DESIGN REPORT	2/99
D	FINAL 1999 DESIGN REPORT	6/99
		LL 6/24/99

NATIONAL RENEWABLE ENERGY LABORATORY
Biotechnology Center For Fuels And Chemicals

SECTION A700
STORAGE

R9906A.xls

PFD-P100-A701 D

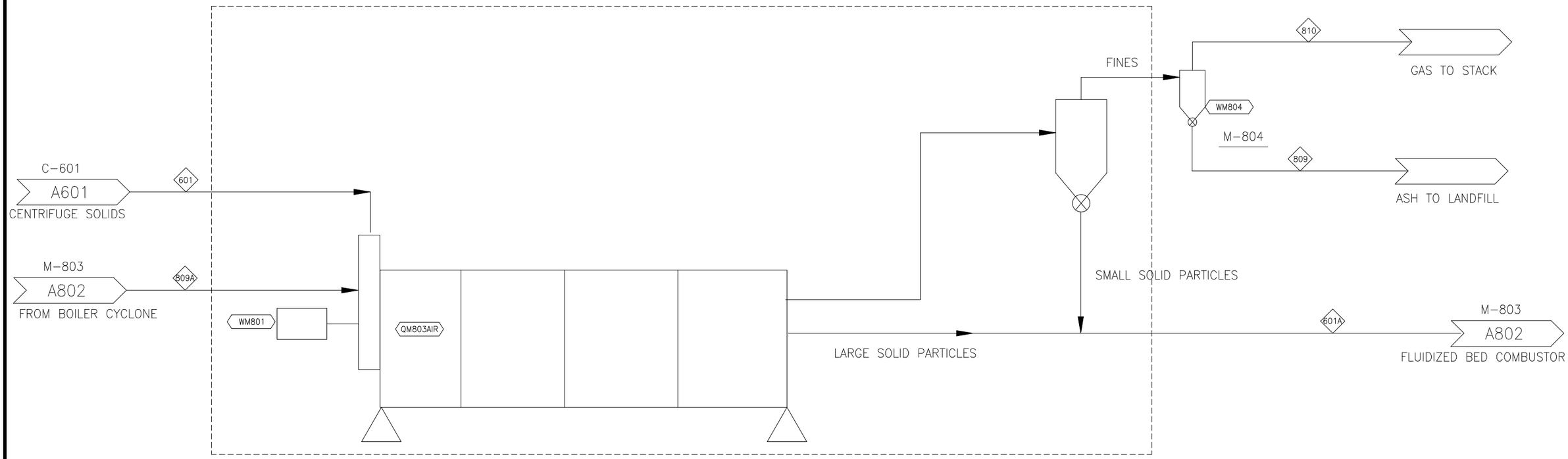

COMPONENT	UNITS	601	601A	809	809A	810
Total Flow	kg/hr	98,277	73,669	1,106	597,905	596,800
Insoluble Solids	%	30.6%	40.8%	100.0%	0.2%	0.0%
Soluble Solids	%	4.4%	5.0%	0.0%	0.3%	0.3%
Temperature	C	40	101		167	167
Pressure	atm	3.20	1.00		0.97	0.97
Vapor Fraction		0.00	0.00	0.00	1.00	1.00
Ethanol	kg/hr	10	1		9	9
Water	kg/hr	61,520	37,744		121,379	121,379
Glucose (SS)	kg/hr	219	219		2	2
Xylose (SS)	kg/hr	203	203		6	6
Arabinose (SS)	kg/hr	160	160		5	5
Other Sugars (SS)	kg/hr	826	826		24	24
Cellobiose (SS)	kg/hr	108	108		3	3
Glucose Oligomers (SS)	kg/hr	850	850		25	25
Xylose Oligomers (SS)	kg/hr	283	283		8	8
Other Oligomers (SS)	kg/hr					
Corn Steep Liquor (SS)	kg/hr	1,649	1,012		1,650	1,650
(NH4)2SO4 (SS)	kg/hr					
NH4Acetate (SS)	kg/hr				0	0
Others (Soluble Solids)	kg/hr	14	14		0	0
Acetic Acid	kg/hr	646	567		91	91
Sulfuric Acid	kg/hr	83	83		4	4
Furfural	kg/hr	49	11		38	38
HMF	kg/hr	16	4		13	13
Carbon Dioxide	kg/hr				96,814	96,814
Methane	kg/hr				13	13
Oxygen	kg/hr				17,956	17,956
Nitrogen	kg/hr				358,079	358,079
Ammonia	kg/hr	0	0		0	0
NH4OH	kg/hr				30	30
Others	kg/hr	1,582	1,527		638	638
Cellulose (IS)	kg/hr	3,559	3,559	36	36	0
Xylan (IS)	kg/hr	778	778	8	8	0
Arabinan (IS)	kg/hr	32	32	0	0	0
Other Sugar Polymers (IS)	kg/hr	161	161	2	2	0
Cellulase (IS)	kg/hr	312	312	5	5	0
Biomass (IS)	kg/hr	123	123	5	5	0
Zymo (IS)	kg/hr	531	531	9	9	0
Lignin (IS)	kg/hr	22,607	22,607	227	230	3
Gypsum (IS)	kg/hr	8	8	8	8	0
Ca(OH)2 (IS)	kg/hr					
Others (Insoluble Solids)	kg/hr	1,946	1,946	806	816	10
Enthalpy Flow (millions)	Kcal/hr	-328.5	-233.1	-2.9	-581.3	-578.3
Average Density	g/ml	1.158	1.186	2.480	0.005	0.001

Heat Stream No.	MM kcal/hr
QM803AIR	17.49

Work Stream No.	kW
WM801	1421.83
WM804	176.00

Eq. No.	Equipment Name	Req.	Spare	Equipment Type	Mat Const.
M-801	Solid Feed Rotary Dryer	1	0	MISCELLANEOUS	
M-804	Combustion Gas Baghouse	1	0	FABRIC-FILTER	A285C;FABRIC

	SCALE	DATE
A	SUBCONTRACTOR UPDATE	4/98
B	DESIGN REPORT	4/99
D	FINAL 1999 DESIGN REPORT	6/99
		LL-6/24/99

NREL
NATIONAL RENEWABLE ENERGY LABORATORY
Biotechnical Center For Fuels And Chemicals

SECTION A800
BOILER FEED DRYING

R9906A.xls | PFD-P100-A801 | D

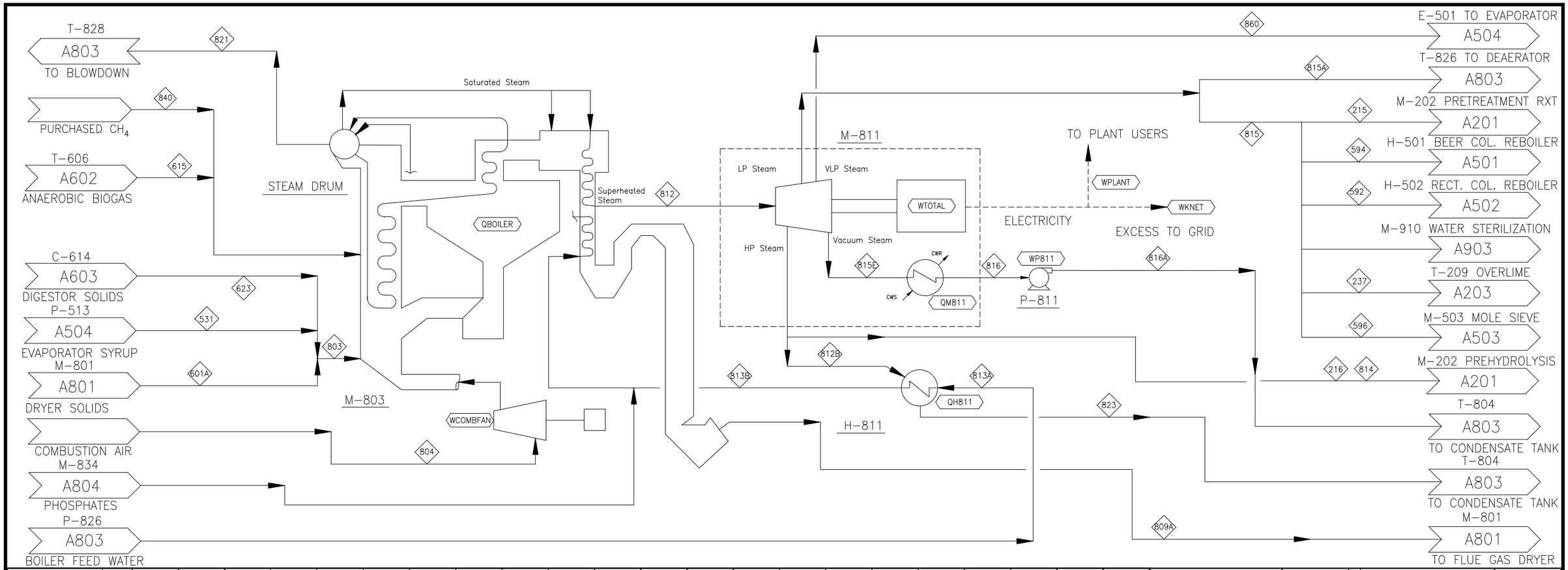

COMPONENT	UNITS	531	601A	615	623	803	804	809A	812	812A	812B	813A	813B	814	815	815A	815C	816	816A	821	823	840	860
Total Flow	kg/hr	24,371	73,669	2,632	918	98,957	471,708	597,905	235,213	235,213	18,164	242,501	242,501	44,596	81,200	25,921	65,332	55,510	55,510	7,275	18,164	0	9,823
Insoluble Solids	%	4.8%	40.8%	0.0%	29.9%	31.8%	0.0%	0.2%	0.0%	0.0%	0.0%	0.0%	0.0%	0.0%	0.0%	0.0%	0.0%	0.0%	0.0%	0.0%	0.0%	0.0%	0.0%
Soluble Solids	%	19.1%	5.0%	0.0%	0.0%	8.4%	0.0%	0.3%	0.0%	0.0%	0.0%	0.0%	0.0%	0.0%	0.0%	0.0%	0.0%	0.0%	0.0%	0.0%	0.0%	0.0%	0.0%
Temperature	C	63	101	35	21	86	24	167	510	268	268	139	177	268	164	164	115	46	46	309	190	25	115
Pressure	atm	0.21	1.00	1.00	1.00	1.00	1.00	0.97	86.06	13.00	13.00	98.31	97.63	13.00	4.42	4.42	1.68	0.10	4.20	96.26	12.32	1.00	1.68
Vapor Fraction		0.00	0.00	1.00	0.00	0.00	1.00	1.00	1.00	1.00	1.00	0.00	0.00	1.00	1.00	1.00	0.97	0.00	0.00	0.00	0.00	1.00	0.97
Ethanol	kg/hr	0	1	0	0	1		9															
Water	kg/hr	14,626	37,744	115	641	53,011	6,132	121,379	235,213	235,213	18,164	242,501	242,501	44,596	81,200	25,921	65,332	55,510	55,510	7,275	18,164		9,823
Glucose (SS)	kg/hr		219			219		2															
Xylose (SS)	kg/hr	388	203			591		6															
Arabinose (SS)	kg/hr	307	160			467		5															
Other Sugars (SS)	kg/hr	1,583	826			2,409		24															
Cellobiose (SS)	kg/hr	207	108			314		3															
Glucose Oligomers (SS)	kg/hr	1,628	850			2,479		25															
Xylose Oligomers (SS)	kg/hr	542	283			825		8															
Other Oligomers (SS)	kg/hr																						
Corn Steep Liquor (SS)	kg/hr		1,012	0	0	1,012		1,650															
(NH4)2SO4 (SS)	kg/hr																						
NH4Acetate (SS)	kg/hr				0	0		0															
Others (Soluble Solids)	kg/hr	11	14			25		0															
Acetic Acid	kg/hr	653	567	0	0	1,220		91															
Sulfuric Acid	kg/hr	159	83			242		4															
Furfural	kg/hr	1	11	0	0	12		38															
HMF	kg/hr	0	4	0	0	4		13															
Carbon Dioxide	kg/hr			1,137	0	0		96,814															
Methane	kg/hr			1,292	0	0		13														0	
Oxygen	kg/hr				0	0	107,738	17,956															
Nitrogen	kg/hr				0	0	357,838	358,079															
Ammonia	kg/hr	0	0	0	0	0		0															
NH4OH	kg/hr			30	0	0		30															
Others	kg/hr	3,096	1,527	57	1	4,624		638															
Cellulose (IS)	kg/hr	54	3,559			3,613		36															
Xylan (IS)	kg/hr	12	778			790		8															
Arabinan (IS)	kg/hr	0	32			33		0															
Other Sugar Polymers (IS)	kg/hr	2	161			164		2															
Cellulase (IS)	kg/hr	234	312			546		5															
Biomass (IS)	kg/hr	92	123		275	489		5															
Zymo (IS)	kg/hr	398	531			929		9															
Lignin (IS)	kg/hr	346	22,607			22,953		230															
Gypsum (IS)	kg/hr	0	8			8		8															
Ca(OH)2 (IS)	kg/hr																						
Others (Insoluble Solids)	kg/hr	30	1,946			1,976		816															
Enthalpy Flow (millions)	Kcal/hr	-71.7	-233.1	-4.2	-2.7	-307.5	-19.8	-581.3	-705.4	-730.3	-56.4	-890.9	-881.5	-138.5	-255.9	-81.7	-208.2	-209.2	-209.2	-25.3	-65.8	0.0	-31.3
Average Density	g/ml	1.094	1.186	0.001	1.148	1.163	0.001	0.005	0.026	0.006	0.006	0.932	0.896	0.006	0.002	0.002	0.001	0.990	0.990	0.693	0.876	0.001	0.001

Heat Stream No.	MM kcal/hr		Work Stream No.	kW
QBOILER	150.67		WCOMBFAN	208.29
QH811	-9.40		WKNET	-10941.82
QM803AIR	17.49		WP811	10.07
QM811	27.69		WTOTAL	-43533.54

Eq. No.	Equipment Name	Req.	Spare	Equipment Type	Mat Const.
H-811	BFW Preheater	1	0	SHELL-TUBE	SS304
M-803	Fluidized Bed Combustion Reactor	1	0	MISCELLANEOUS	CS
M-811	Turbine/Generator	1	0	STEAM-TURBINE	0
P-811	Turbine Condensate Pump	2	0	CENTRIFUGAL	SS304

VER	DESCRIPTION	DATE
A	SUBCONTRACTOR UPDATE	4/98
B	BASECASE UPDATE	9/98
C	DESIGN REPORT	4/99
D	FINAL 1999 DESIGN REPORT	6/99
		LL 6/24/99

NREL
NATIONAL RENEWABLE ENERGY LABORATORY
Biotechnology Center For Fuels And Chemicals

SECTION A800
COMBUSTOR AND TURBO GENERATOR

R9906A.xls | PFD-P100-A802 | D

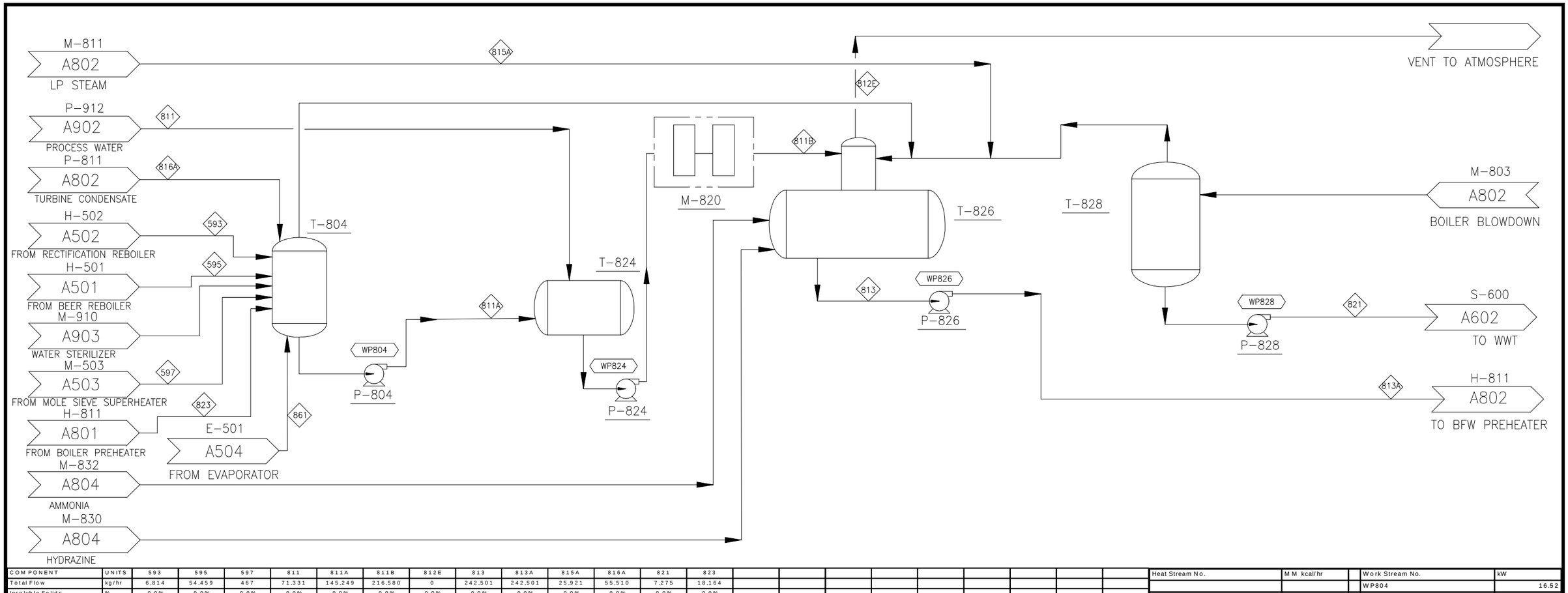

COMPONENT	UNITS	593	595	597	811	811A	811B	812E	813	813A	815A	816A	821	823
Total Flow	kg/hr	6,814	54,459	467	71,331	145,249	216,580	0	242,501	242,501	25,921	55,510	7,275	18,164
Insoluble Solids	%	0.0%	0.0%	0.0%	0.0%	0.0%	0.0%	0.0%	0.0%	0.0%	0.0%	0.0%	0.0%	0.0%
Soluble Solids	%	0.0%	0.0%	0.0%	0.0%	0.0%	0.0%	0.0%	0.0%	0.0%	0.0%	0.0%	0.0%	0.0%
Temperature	C	148	148	148	26	99	75		137	139	164	46	309	190
Pressure	atm	4.42	4.42	4.42	3.40	1.70	3.40	3.30	3.30	98.31	4.42	4.20	96.26	12.32
Vapor Fraction		0.00	0.00	0.00	0.00	0.00	0.00	0.00	0.00	0.00	1.00	0.00	0.00	0.00
Ethanol	kg/hr													
Water	kg/hr	6,814	54,459	467	71,331	145,249	216,580		242,501	242,501	25,921	55,510	7,275	18,164
Glucose (SS)	kg/hr													
Xylose (SS)	kg/hr													
Arabinose (SS)	kg/hr													
Other Sugars (SS)	kg/hr													
Cellobiose (SS)	kg/hr													
Glucose Oligomers (SS)	kg/hr													
Xylose Oligomers (SS)	kg/hr													
Other Oligomers (SS)	kg/hr													
Corn Steep Liquor (SS)	kg/hr													
(NH4)2SO4 (SS)	kg/hr													
NH4Acetate (SS)	kg/hr													
Others (Soluble Solids)	kg/hr													
Acetic Acid	kg/hr													
Sulfuric Acid	kg/hr													
Furfural	kg/hr													
HMF	kg/hr													
Carbon Dioxide	kg/hr													
Methane	kg/hr													
Oxygen	kg/hr													
Nitrogen	kg/hr													
Ammonia	kg/hr													
NH4OH	kg/hr													
Others	kg/hr													
Cellulose (IS)	kg/hr													
Xylan (IS)	kg/hr													
Arabinan (IS)	kg/hr													
Other Sugar Polymers (IS)	kg/hr													
Cellulase (IS)	kg/hr													
Biomass (IS)	kg/hr													
Zymo (IS)	kg/hr													
Lignin (IS)	kg/hr													
Gypsum (IS)	kg/hr													
Ca(OH)2 (IS)	kg/hr													
Others (Insoluble Solids)	kg/hr													
Enthalpy Flow (millions)	Kcal/hr	-24.9	-199.3	-1.7	-270.2	-539.7	-809.9		-891.6	-890.9	-81.7	-209.2	-25.3	-65.8
Average Density	g/ml	0.865	0.865	0.865	0.997	0.959	0.975		0.928	0.932	0.002	0.990	0.693	0.876

Heat Stream No.	M M kcal/hr	Work Stream No.	kW
		WP804	16.52
		WP824	13.84
		WP826	894.72
		WP828	2.29

Eq. No.	Equipment Name	Req.	Spare	Equipment Type	Mat Const.
M-820	Hot Process Water Softener System	1	0	PACKAGE	0
P-804	Condensate Pump	2	0	CENTRIFUGAL	SS316
P-824	Deaerator Feed Pump	2	0	CENTRIFUGAL	SS304
P-826	BFW Pump	5	0	CENTRIFUGAL	SS316
P-828	Blowdown Pump	2	0	CENTRIFUGAL	CS
T-804	Condensate Collection Tank	1	0	VERTICAL-VESSEL	A285C
T-824	Condensate Surge Drum	1	0	HORIZONTAL-VESSEL	SS304
T-826	Deaerator	1	0	HORIZONTAL-VESSEL	CS;SS316
T-828	Blowdown Flash Drum	1	0	HORIZONTAL-VESSEL	CS

VER	DESCRIPTION	DATE
A	SUBCONTRACTOR UPDATE	4/98
B	BASECASE UPDATE	9/98
C	DESIGN REPORT	4/99
D	FINAL 1999 DESIGN REPORT	6/99
		LL 6/24/99

NATIONAL RENEWABLE ENERGY LABORATORY
Biotechnology Center For Fuels And Chemicals

SECTION A800
BOILER FEED WATER PREPARATION

R9906A.xls | PFD-P100-A803 | D

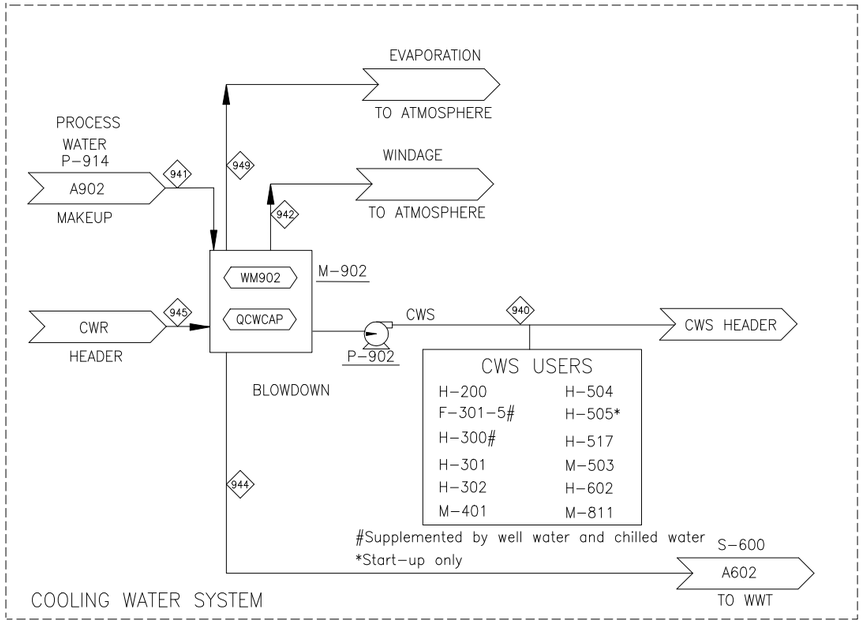

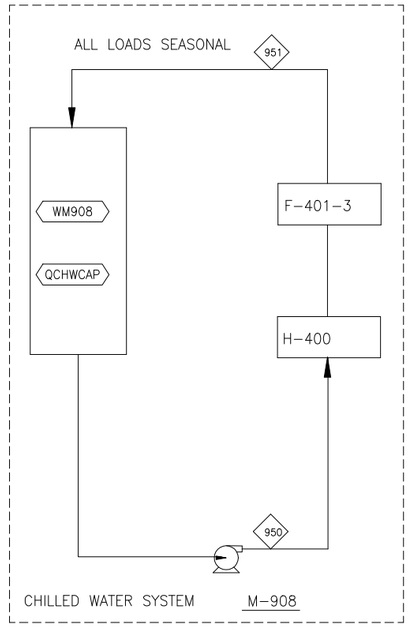

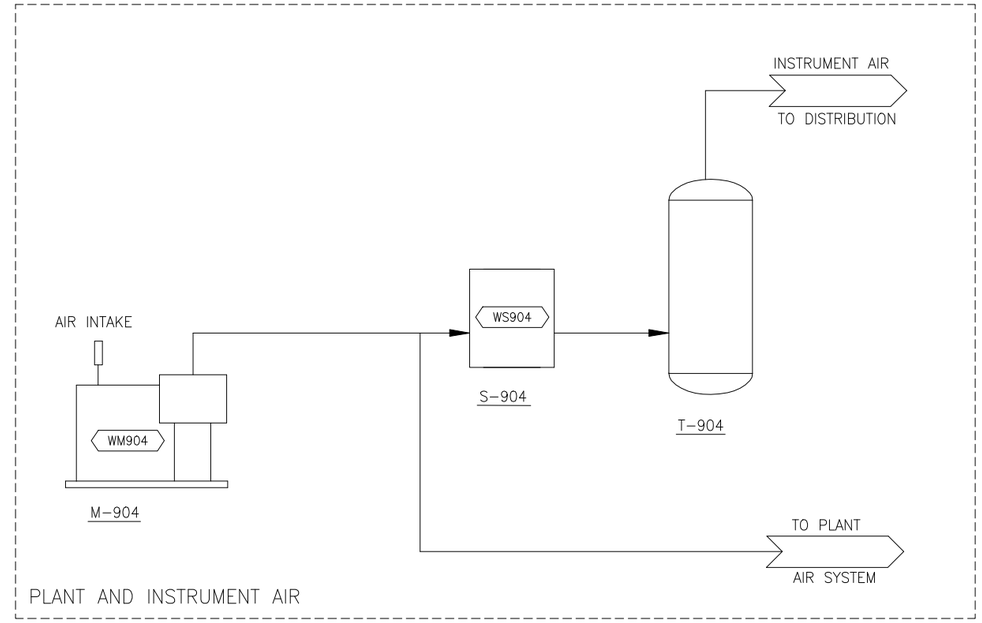

COMPONENT	UNITS	940	941	942	944	945	949	950	951
Total Flow	kg/hr	13,840,700	196,024	11,516	17,820	13,840,700	166,688	4,878,840	4,878,840
Insoluble Solids	%	0.0%	0.0%	0.0%	0.0%	0.0%	0.0%	0.0%	0.0%
Soluble Solids	%	0.0%	0.0%	0.0%	0.0%	0.0%	0.0%	0.0%	0.0%
Temperature	C	37	28	28	28	28	28	4	8
Pressure	atm	4.08	1.00	1.00	1.00	4.08	0.04	4.08	4.08
Vapor Fraction		0.00	0.00	0.00	0.00	0.00	1.00	0.00	0.00
Ethanol	kg/hr								
Water	kg/hr	13,840,700	196,024	11,516	17,820	13,840,700	166,688	4,878,840	4,878,840
Glucose (SS)	kg/hr								
Xylose (SS)	kg/hr								
Arabinose (SS)	kg/hr								
Other Sugars (SS)	kg/hr								
Cellobiose (SS)	kg/hr								
Glucose Oligomers (SS)	kg/hr								
Xylose Oligomers (SS)	kg/hr								
Other Oligomers (SS)	kg/hr								
Corn Steep Liquor (SS)	kg/hr								
(NH4)2SO4 (SS)	kg/hr								
NH4Acetate (SS)	kg/hr								
Others (Soluble Solids)	kg/hr								
Acetic Acid	kg/hr								
Sulfuric Acid	kg/hr								
Furfural	kg/hr								
HMF	kg/hr								
Carbon Dioxide	kg/hr								
Methane	kg/hr								
Oxygen	kg/hr								
Nitrogen	kg/hr								
Ammonia	kg/hr								
NH4OH	kg/hr								
Others	kg/hr								
Cellulose (IS)	kg/hr								
Xylan (IS)	kg/hr								
Arabinan (IS)	kg/hr								
Other Sugar Polymers (IS)	kg/hr								
Cellulase (IS)	kg/hr								
Biomass (IS)	kg/hr								
Zymo (IS)	kg/hr								
Lignin (IS)	kg/hr								
Gypsum (IS)	kg/hr								
Ca(OH)2 (IS)	kg/hr								
Others (Insoluble Solids)	kg/hr								
Enthalpy Flow (millions)	Kcal/hr	-52268.9	-741.9	-43.6	-67.4	-52385.2	-534.2	-18572.0	-18554.6
Average Density	g/ml	0.982	0.991	0.991	0.991	0.991	0.000	1.014	1.010

Heat Stream No.	MM kcal/hr
QCWCAP	116.24
QCHWCAP	17.43

Work Stream No.	kW
WM902	745.49
WM904	186.40
WM908	1346.93
WS904	12.00

Eq. No.	Equipment Name	Req.	Spare	Equipment Type	Mat Const.
M-902	Cooling Tower System	1	0	INDUCED-DRAFT	FIBERGLASS
M-904	Plant Air Compressor	2	1	RECIPROCATING	CS
M-908	Chilled Water Package	3	0	CENTRIFUGAL	CS
P-902	Cooling Water Pumps	1	1	CENTRIFUGAL	CS
S-904	Instrument Air Dryer	1	1	PACKAGE	CS
T-904	Plant Air Receiver	1	0	HORIZONTAL-VESSEL	CS

VER	DESCRIPTION	DATE
A	SUBCONTRACTOR UPDATE	4/98
B	BASECASE UPDATE	9/98
C	WWT UPDATE	11/98
D	FINAL 1999 DESIGN REPORT	6/99
		LL 6/24/99

NREL
NATIONAL RENEWABLE ENERGY LABORATORY
Biotechnology Center For Fuels And Chemicals

SECTION A900
COOLING WTR PLNT & INST AIR SYS

R9906A.xls | PFD-P100-A901 | D

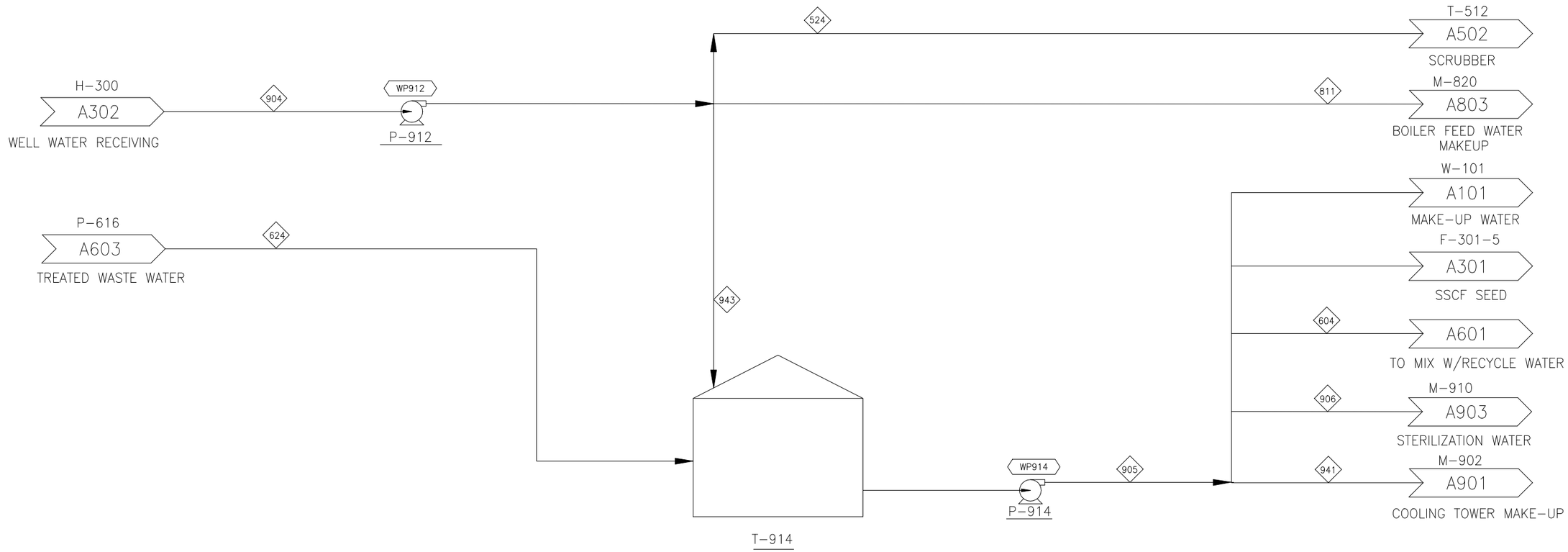

COMPONENT	UNITS	524	604	624	811	904	905	906	941	943
Total Flow	kg/hr	13,042	83,163	173,154	71,331	185,593	274,375	63	196,024	101,220
Insoluble Solids	%	0.0%	0.0%	0.0%	0.0%	0.0%	0.0%	0.0%	0.0%	0.0%
Soluble Solids	%	0.0%	0.0%	0.1%	0.0%	0.0%	0.0%	0.0%	0.0%	0.0%
Temperature	C	13	20	21	26	26	24	20	28	28
Pressure	atm	1.00	1.00	1.00	3.40	1.00	1.00	1.00	1.00	1.00
Vapor Fraction		0.00	0.00	0.00	0.00	0.00	0.00	0.00	0.00	0.00
Ethanol	kg/hr			0			0			
Water	kg/hr	13,042	83,163	172,755	71,331	185,593	273,976	63	196,024	101,220
Glucose (SS)	kg/hr									
Xylose (SS)	kg/hr									
Arabinose (SS)	kg/hr									
Other Sugars (SS)	kg/hr									
Cellobiose (SS)	kg/hr									
Glucose Oligomers (SS)	kg/hr									
Xylose Oligomers (SS)	kg/hr									
Other Oligomers (SS)	kg/hr									
Corn Steep Liquor (SS)	kg/hr			75			75			
(NH4)2SO4 (SS)	kg/hr									
NH4Acetate (SS)	kg/hr			25			25			
Others (Soluble Solids)	kg/hr									
Acetic Acid	kg/hr			2			2			
Sulfuric Acid	kg/hr									
Furfural	kg/hr			4			4			
HMF	kg/hr			1			1			
Carbon Dioxide	kg/hr			0			0			
Methane	kg/hr			0			0			
Oxygen	kg/hr			1			1			
Nitrogen	kg/hr			3			3			
Ammonia	kg/hr			5			5			
NH4OH	kg/hr			32			32			
Others	kg/hr			250			250			
Cellulose (IS)	kg/hr									
Xylan (IS)	kg/hr									
Arabinan (IS)	kg/hr									
Other Sugar Polymers (IS)	kg/hr									
Cellulase (IS)	kg/hr									
Biomass (IS)	kg/hr									
Zymo (IS)	kg/hr									
Lignin (IS)	kg/hr									
Gypsum (IS)	kg/hr									
Ca(OH)2 (IS)	kg/hr									
Others (Insoluble Solids)	kg/hr									
Enthalpy Flow (millions)	Kcal/hr	-49.5	-315.4	-656.2	-270.2	-702.8	-1039.4	-0.2	-741.9	-383.1
Average Density	g/ml	1.005	0.998	0.997	0.997	0.993	0.995	0.998	0.991	0.991

Heat Stream No.	MM kcal/hr	Work Stream No.	kW
		WP912	20.73
		WP914	60.24

Eq. No.	Equipment Name	Req.	Spare	Equipment Type	Mat Const.
P-912	Make-up Water Pump	1	1	CENTRIFUGAL	CS
P-914	Process Water Circulating Pump	2	1	CENTRIFUGAL	CS
T-914	Process Water Tank	1	0	FLAT-BTM-STORAGE	CS

VER	DESCRIPTION	DATE
A	SUBCONTRACTOR UPDATE	4/98
B	BASECASE UPDATE	9/98
C	DESIGN REPORT	2/99
D	FINAL 1999 DESIGN REPORT	6/99
		LL 6/25/99

NREL NATIONAL RENEWABLE ENERGY LABORATORY
Biotechnology Center For Fuels And Chemicals

SECTION A900
PROCESS WATER

R9906A.xls | PFD-P100-A902 | D

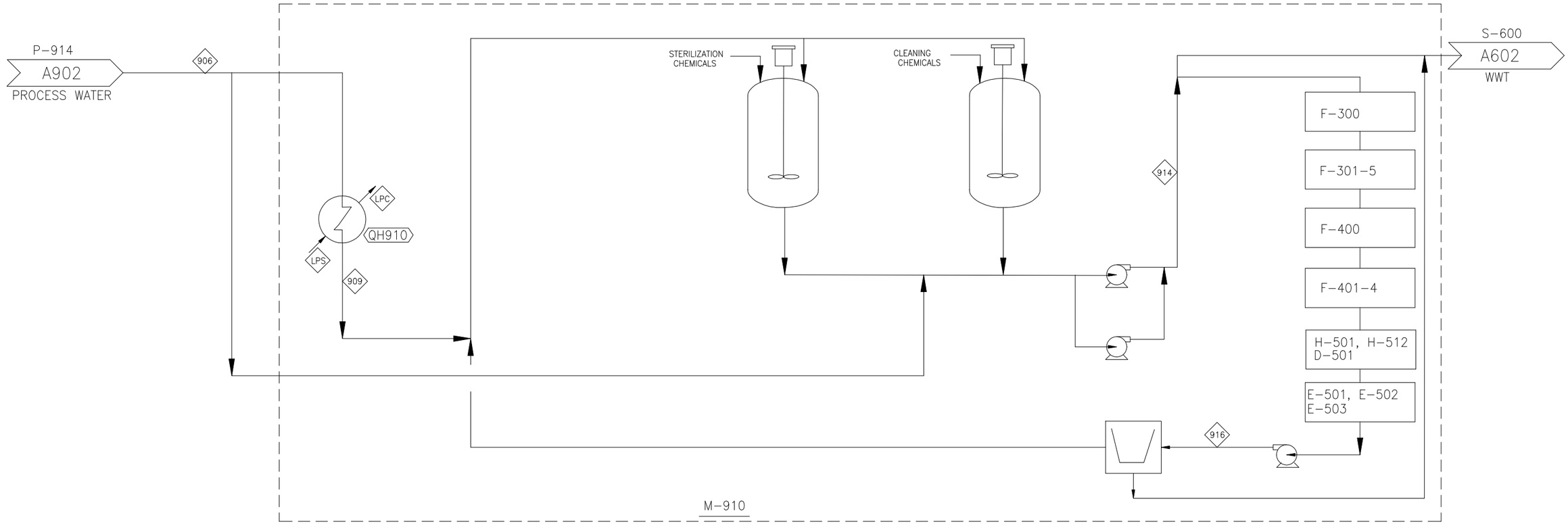

COMPONENT	UNITS	906	909	914	916
Total Flow	kg/hr	63	63	63	63
Insoluble Solids	%	0.0%	0.0%	0.0%	0.0%
Soluble Solids	%	0.0%	0.0%	0.0%	0.0%
Temperature	C	20	121	20	20
Pressure	atm	1.00	1.00	1.00	1.00
Vapor Fraction		0.00	1.00	0.00	0.00
Ethanol	kg/hr				
Water	kg/hr	63	63	63	63
Glucose (SS)	kg/hr				
Xylose (SS)	kg/hr				
Arabinose (SS)	kg/hr				
Other Sugars (SS)	kg/hr				
Cellobiose (SS)	kg/hr				
Glucose Oligomers (SS)	kg/hr				
Xylose Oligomers (SS)	kg/hr				
Other Oligomers (SS)	kg/hr				
Corn Steep Liquor (SS)	kg/hr				
(NH4)2SO4 (SS)	kg/hr				
NH4Acetate (SS)	kg/hr				
Others (Soluble Solids)	kg/hr				
Acetic Acid	kg/hr				
Sulfuric Acid	kg/hr				
Furfural	kg/hr				
HMF	kg/hr				
Carbon Dioxide	kg/hr				
Methane	kg/hr				
Oxygen	kg/hr				
Nitrogen	kg/hr				
Ammonia	kg/hr				
NH4OH	kg/hr				
Others	kg/hr				
Cellulose (IS)	kg/hr				
Xylan (IS)	kg/hr				
Arabinan (IS)	kg/hr				
Other Sugar Polymers (IS)	kg/hr				
Cellulase (IS)	kg/hr				
Biomass (IS)	kg/hr				
Zymo (IS)	kg/hr				
Lignin (IS)	kg/hr				
Gypsum (IS)	kg/hr				
Ca(OH)2 (IS)	kg/hr				
Others (Insoluble Solids)	kg/hr				
Enthalpy Flow (millions)	Kcal/hr	-0.2	-0.2	-0.2	-0.2
Average Density	g/ml	0.998	0.001	0.998	0.998

Heat Stream No.	MM kcal/hr		Work Stream No.	kW
QH910	-0.04			

Eq. No.	Equipment Name	Req.	Spare	Equipment Type	Mat Const.
M-910	CIP System	1	0	MISCELLANEOUS	CS

VER	DESCRIPTION	DATE
A	SUBCONTRACTOR UPDATE	4/98
B	BASECASE UPDATE	9/98
C	DESIGN REPORT	2/99
D	FINAL 1999 DESIGN REPORT	6/99
		LL 6/24/99

NREL
NATIONAL RENEWABLE ENERGY LABORATORY
Biotechnology Center For Fuels And Chemicals

SECTION A900
STERILE WATER & CIP/CS SYSTEMS

R9906A.xls | PFD-P100-A903 | D