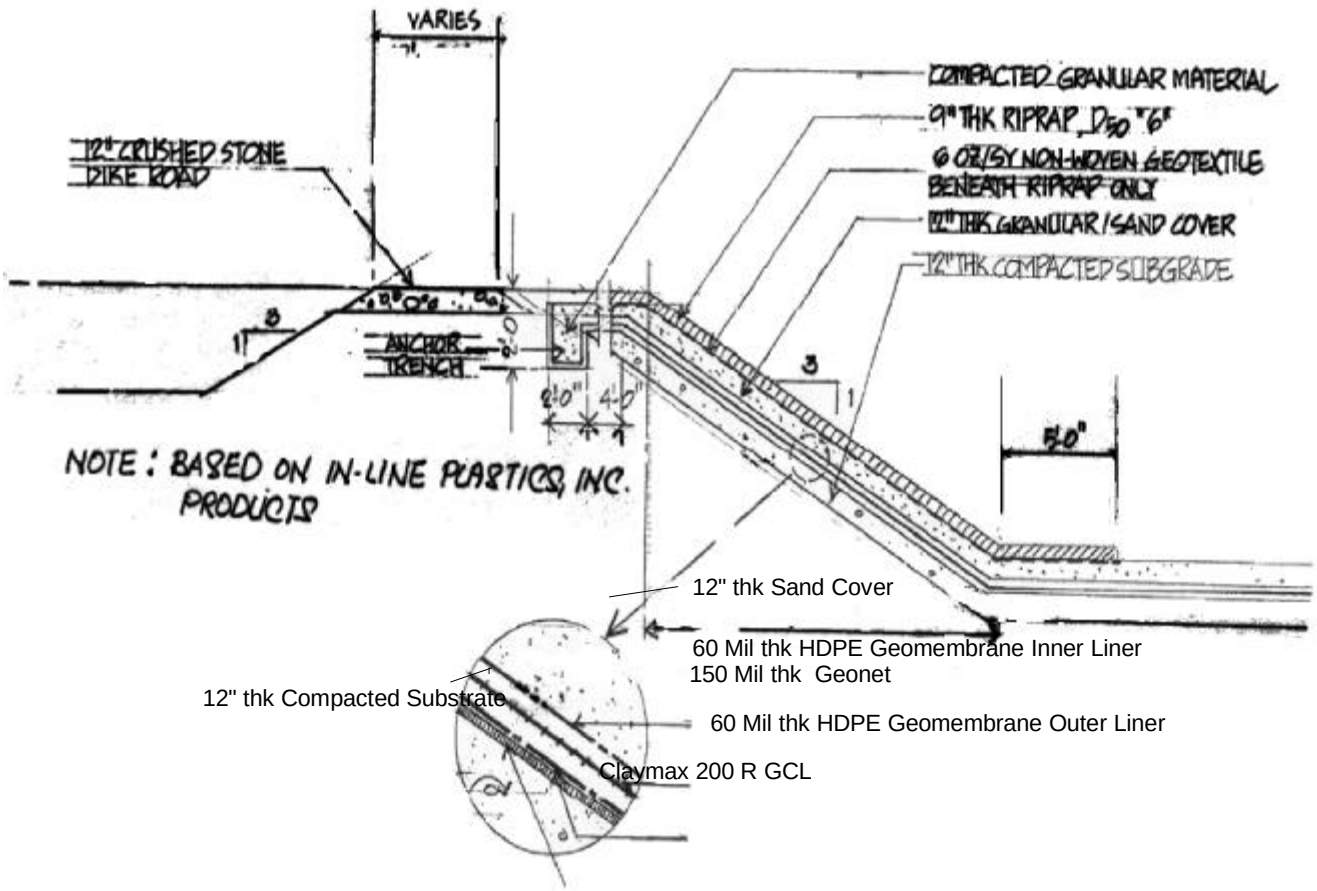

Evaporation Pond Detail

BLYTHE ENERGY PROJECT PHASE II	
FIGURE 2.0-21 EVAPORATION POND CROSS SECTION	
ANALYSIS AREA: RIVERSIDE CO., CALIFORNIA	
DATE: 12/2001	ArcView FILE: D:\BLYTHE\..fig12-2001
PLOT SCALE: NTS	DRAWN BY: GF