FOSTER WHEELER ENVIRONMENTAL CORPORATION

Mr. Steve Larson
Executive Director
California Energy Commission
1516 Ninth St.
MS-4
Sacramento, CA. 95814

April 15, 2002

Attention: Dockets Unit

Re: Inland Empire Energy Center Project- Docket No. 01-AFC-017
Workshop Responses to CEC Staff Workshop Data Requests-February 26, 2002

Dear Mr. Larson:

Enclosed are twenty-six (26) sets of the Workshop Responses for the Inland Empire Energy Center Project (original signed document and 25 copies). This data is submitted in response to the staff's Workshop Data Requests. The enclosed responses consist of additional data and/or clarifications to data responses as requested by CEC staff during the Workshop held in Romoland, CA., on February 26, 2001.

In addition to the February 26th Workshop Responses, this package includes four (4) 3.5" diskettes which contain the SLAB modeling input/output files for the ammonia offsite consequence analysis requested by CEC staff.

Dated this 15th day of April, 2002.

Sincerely,

Richard B. Booth
Project Manager

Attachments

1940 E. DEERE AVENUE, SUITE 200, SANTA ANA, CA 92705
TEL: 949-756-7500 FAX: 949-756-7560

[redacted]

BEFORE THE ENERGY RESOURCES CONSERVATION AND DEVELOPMENT COMMISSION OF THE STATE OF CALIFORNIA

	)	Docket No. 01-AFC-17
APPLICATION FOR CERTIFICATION	)	
FOR THE INLAND EMPIRE ENERGY	)	PROOF OF SERVICE
CENTER	)	(Revised 02/01/02)
_____	)	

I, **Richard B. Booth**, declare that on **April 15, 2002**, I served copies of the attached **February 26th Workshop Responses to California Energy Commission Staff's Data Requests** by Federal Express, for delivery to Sacramento, by depositing such envelope in a facility regularly maintained by Federal Express with delivery fees fully provided for or delivered the envelope to a courier or driver of Federal Express authorized to receive documents at Foster Wheeler Environmental Corp., 1940 East Deere Ave., Suite 200, Santa Ana, CA 92705 with delivery fees fully provided, for delivery to the following:

DOCKET UNIT

Original signed document plus 25 copies.

CALIFORNIA ENERGY COMMISSION
Attn: Docket No. 01-AFC-17
DOCKET UNIT, MS-4
1516 Ninth Street
Sacramento, CA 95814-5512

In addition to the documents sent to
the Commission Docket Unit:

I, **Richard B. Booth**, declare that on **April 15, 2002**, I deposited copies of the attached **February 26th Workshop Responses to California Energy Commission Staff's Data Requests** in the United States mail at Santa Ana, CA with first class postage thereon fully prepaid and addressed to the following:

APPLICANT

Gregory A. Lamberg
Calpine Corporation
4160 Dublin Blvd.
Dublin, CA 94568-3139

Michael Hatfield
Calpine Corporation
4160 Dublin Blvd.
Dublin, CA 94568-3139

Jenifer Morris
NJ Resources, LLC
249 East Ocean Blvd., #408
Long Beach, CA 90802

COUNSEL FOR APPLICANT:

Jane Luckhardt
Ann Trowbridge
Downey, Brand, Seymour & Rower
555 Capitol Mall, 10th Floor
Sacramento, CA 95814-4686

INTERVENORS

CURE
C/O Marc D. Joseph, Esq.
Mark R. Wolfe, Esq.
Adams Broadwell Joseph & Cardozo
651 Gateway Blvd., Suite 900
South San Francisco, California 94080

Romoland School District
C/O Mark Luesebrink, Esq.
Jeffrey M. Oderman, Esq.
Rutan & Tucker , Attorneys at Law
611 Anton Blvd., 14th Fl.
Costa Mesa, CA 92626

INTERESTED AGENCIES

Eastern Municipal Water District
Attn: Dick Heil
2270 Trumble Road
P.O. Box 8300
Perris, CA 92572-8300

Independent System Operator
Jeffery Miller
151 Blue Ravine Road
Folsom, CA 95630

Electricity Oversight Board
Gary Heath, Executive Director
770 L Street, Suite 1250
Sacramento, CA 95814

Paul Clanon, Director
Energy Division
California Public Utilities Commission
505 Van Ness Avenue
San Francisco, CA 94102

I declare under penalty of perjury that the foregoing is true and correct.

Richard B. Booth

* * * *

DATA RESPONSES FOR WORKSHOP #1

FOR

INLAND EMPIRE ENERGY CENTER

Compiled by

FOSTER WHEELER ENVIRONMENTAL CORPORATION

1940 E. Deere Avenue, Suite 200
Santa Ana, CA 92705

April 15, 2002

TABLE OF CONTENTS

PAGE

LAND USE RESPONSES 1

NOISE RESPONSES 2

HAZARDOUS MATERIALS RESPONSES 9

PUBLIC HEALTH RESPONSES 15

AIR QUALITY RESPONSES 16

LAND USE RESPONSES

No data requests were received from staff at the February 26th workshop concerning Land Use.

NOISE RESPONSES

Workshop Request 1-1 – During the February 26, 2002 Noise workshop, CEC staff requested, per Data Request 76, that the Applicant consider the use of a low pressure "continuous" steam blow as a means of reducing the noise levels associated with this activity.

> **Addendum to Data Response 76 –** In preparing the response to this data request, the Applicant found several errors in the calculated data presented in the bottom of Table 5.9-3 of the AFC and Table 76-1 provided in Data Response #76. Attached are revised versions of each table which supersede the previous versions.
>
> In the AFC version of Table 5.9-3, the averages of the L_{90} values for the six quietest hours and the nine nighttime hours were calculated by simply adding the values and dividing by the number of values. Since noise data is presented on a logarithmic scale, the hourly L_{90} values should be average logarithmically, as presented in the attached revised version of Table 5.9-3.
>
> In the version of Table 76-1 provided with Data Response #76, the 24-hour averages for the L_{10}, L_{50}, and L_{90} noise levels were also calculated using the simple averaging method. The revised version of Table 76-1 now includes logarithmic averages for each of the noise levels and also corrects errors in the calculations of the $L_{eq}(24)$, DNL, and CNEL.

Revised Table 5.9-3 Hourly L_{eq} and Composite Noise Levels Calpine IEEC Combined-Cycle Energy Center

		Location 1				Location 2				Location 3			
		NW Residence				SW Residence				Compressor Station			
Date	**Hour**	L_{eq}	L_{10}	L_{50}	L_{90}	L_{eq}	L_{10}	L_{50}	L_{90}	L_{eq}	L_{10}	L_{50}	L_{90}
6/13/01	1600	63.0	65.5	57.5	52.5	52.5	53.0	46.0	43.0	56.0	56.5	49.5	45.5
"	1700	57.5	60.5	56.5	53.0	49.5	51.0	45.0	42.5	56.0	55.5	50.5	46.0
"	1800	59.0	59.5	54.0	49.5	53.5	52.5	43.5	40.5	60.0	57.0	50.5	45.0
"	1900	54.0	57.0	52.5	48.5	48.0	50.5	42.5	39.5	54.0	54.0	49.5	43.5
"	2000	53.0	56.0	50.5	46.5	43.5	45.0	40.0	38.0	51.5	54.0	47.5	42.0
"	2100	55.5	58.5	51.0	46.5	51.5	55.0	43.0	41.0	55.5	56.0	48.5	43.5
"	2200	53.0	55.0	50.0	**46.0**	50.0	44.5	41.0	**39.0**	51.5	54.0	47.5	**43.0**
"	2300	52.0	53.5	49.0	**44.0**	43.0	45.0	42.5	**40.0**	52.5	54.0	52.0	**50.5**
6/14/01	0000	49.5	52.5	47.0	**40.0**	42.0	44.0	41.0	**38.0**	52.0	53.5	52.0	**50.0**
"	0100	48.5	52.0	45.0	**36.0**	41.5	44.5	40.5	**37.0**	52.5	54.5	52.5	**50.0**
"	0200	48.0	51.0	45.5	**40.0**	42.5	44.5	41.0	**38.0**	52.5	55.0	51.5	**49.5**
"	0300	49.0	52.5	47.0	**40.5**	44.5	46.0	42.0	**39.0**	54.0	56.5	53.0	**50.5**
"	0400	54.5	57.0	52.0	47.0	49.0	50.5	47.0	43.0	54.0	56.0	53.0	49.5
"	0500	58.0	61.5	56.0	52.0	52.0	54.0	51.5	49.0	57.5	59.0	56.0	53.5
"	0600	60.5	63.0	59.5	55.5	56.0	58.0	56.0	52.0	56.5	57.5	55.0	52.5
"	0700	62.0	64.0	59.5	57.5	53.5	56.0	52.5	49.5	56.5	54.5	51.0	48.5
"	0800	64.0	63.5	59.0	57.0	47.5	49.0	44.5	42.0	57.0	51.0	47.0	44.5
"	0900	60.0	62.0	58.5	56.0	48.5	48.0	41.5	39.5	52.5	49.0	43.5	41.5
"	1000	60.0	61.5	58.0	55.5	50.5	49.0	41.0	38.5	56.5	50.0	43.0	40.5
"	1100	60.5	63.0	60.0	57.0	49.5	51.5	46.5	41.5	51.0	50.5	44.0	40.0
"	1200	58.0	61.0	56.5	52.5	50.0	50.5	45.0	41.0	54.0	51.0	44.0	40.0
"	1300	55.5	58.5	53.5	48.0	51.0	51.5	43.5	39.5	60.0	55.0	43.5	40.5
"	1400	56.0	58.5	52.5	47.0	46.0	49.0	42.5	38.0	52.5	53.0	44.0	40.0
"	1500	55.5	58.0	52.0	47.5	51.5	53.0	44.0	38.5	49.5	49.0	43.5	40.5
"	1600	58.0	60.5	56.5	52.0	50.5	54.0	46.5	42.5	52.5	52.5	47.5	43.0
	L_{eq}(24)	58.2				50.2				55.3			
	DNL	62.2				56.2				60.9			
	CNEL	62.4				56.4				61.1			
Average of 6 quietest continuous nighttime hrs. (L_{90})					42.2				38.6				49.5
Avg. of nighttime hrs. (L_{90})					48.7				45.2				50.6

Notes:

1. Nighttime hours are shaded.

2. The six quietest nighttime L_{90} values are shown in bold.

3. All averages are calculated logarithmically.

Revised Table 76-1
Hourly Sound Levels in the Community of Romoland

		Location 1 Romoland Elementary School				Location 2 Northeast Corner of Romoland			
Date	**Hour**	L_{eq}	L_{10}	L_{50}	L_{90}	L_{eq}	L_{10}	L_{50}	L_{90}
1/29/02	1400	78.0	78.2	63.3	54.4	72.7	73.1	64.5	54.7
"	1500	70.6	67.2	59.0	55.2	72.0	73.1	62.4	56.6
"	1600	60.2	63.8	56.1	52.4	67.7	71.0	60.7	55.9
"	1700	60.2	63.1	54.2	50.7	66.9	69.6	59.2	54.6
"	1800	62.6	63.1	54.5	50.3	65.8	68.4	56.9	50.3
"	1900	56.0	58.1	54.1	50.9	62.0	63.1	52.5	46.4
"	2000	54.7	56.6	52.3	49.0	59.2	60.4	51.3	47.2
"	2100	61.0	62.9	51.5	47.4	61.6	62.8	51.1	47.1
"	2200	56.2	55.7	51.2	47.2	59.3	56.5	50.0	46.1
"	2300	51.8	53.6	49.6	46.3	52.7	53.0	48.3	45.1
"	2400	48.1	50.9	46.7	43.6	49.7	51.5	46.2	42.8
1/30/02	0100	50.3	50.7	45.9	42.4	54.0	50.7	44.7	41.5
"	0200	47.2	49.1	45.4	42.9	46.9	48.1	43.8	40.3
"	0300	49.7	51.0	47.6	45.0	53.1	48.4	44.8	41.9
"	0400	53.7	55.7	52.3	47.7	58.6	56.7	52.0	46.2
"	0500	57.0	58.5	56.3	54.1	58.1	58.3	54.0	51.1
"	0600	61.0	63.1	58.8	56.0	63.6	64.8	57.1	53.2
"	0700	63.4	67.0	60.2	56.1	68.6	73.4	60.0	52.7
"	0800	62.5	65.9	59.1	56.0	66.5	70.1	57.9	53.4
"	0900	61.3	64.1	58.0	54.7	64.8	66.0	57.3	52.6
"	1000	60.3	62.6	57.8	54.5	64.2	66.2	57.2	53.0
"	1100	61.6	64.3	59.5	55.6	64.5	67.1	58.4	54.2
"	1200	63.7	67.6	60.5	57.1	65.7	68.9	58.9	53.8
"	1300	71.2	71.6	63.7	57.7	69.8	71.0	60.5	55.4
"	1400	65.3	64.9	59.6	55.3	70.7	67.7	59.0	54.7
	L_{eq}(24)	62.9				65.5			
	DNL	64.8				67.4			
	CNEL	65.1				67.7			
	Average		63.8	57.1	53.3		67.4	57.0	52.0

Notes:

1. Nighttime hours are shaded.

2. L_{eq}(24), DNL, CNEL, and average values are calculated using the second 1400 reading.

3. Average values shown are logarithmic averages.

Prior to addressing the projected noise levels associated with low pressure steam blow activities, the Applicant wishes to provide additional information relating to the noise impacts associated with high pressure steam blow activities.

Data Request #74 requested a discussion of the potential noise effects associated with steam blows for the proposed project at the nearest sensitive receptors, including estimates of the steam blow noise levels, their effect, and any proposed mitigation measures. Data Response #74 provided this information, describing a high pressure "intermittent" steam blow procedure. Table 74-1, which remains unchanged, lists the estimated noise levels resulting from high-pressure steam blow activities at the four nearest sensitive receptors. It is important to note that the indicated values represent the noises levels predicted to occur while steam is being released. Since high-pressure steam blows are intermittent, there will be extended periods of time between individual blows when the noise levels will be much lower.

Table 74-1
Estimated Total Facility Noise Levels at Nearest Sensitive Receptors during High-Pressure Steam Blow Activities

Location	Estimated Energy Center Noise Level, dBA
DP-1. Ethanac Road	48
DP-2. McLaughlin & Dawson Roads	48
DP-3. McLaughlin & Palomar Roads	48
DP-4. Highway 74 North of Site	47

As indicated in Data Response #74, high-pressure steam blow activities will be conducted only during daytime hours (defined as 7 a.m. to 9 p.m. in Data Response #74). It is thus appropriate to compare the noise associated with steam blow activities to daytime ambient noise levels. The daytime ambient noise levels averaged 59.4 dBA at Site 1 and 50.5 dBA at Site 2 (calculated using L_{eq} values from Table 5.9 3 and defining daytime hours as 7 a.m. to 10 p.m.). Combining the estimated steam blow noise with the existing average ambient noise results in projected overall average daytime noise levels of 59.7 dBA at Site 1 and 52.4 dBA at Site 2, or an increase of 0.3 and 1.9 dBA, respectively. These are conservative estimates given that the maximum noise levels, which with high-pressure steam blows occur only intermittently, were assumed to occur continuously. To put these increases in perspective, it is helpful to consider the following relationships (ref. Section 5.9.1 of the AFC):

- Except in carefully controlled laboratory experiments, a change of 1 dBA cannot be perceived by humans,
- In a laboratory, a 3 dBA change is considered a just-perceptible difference.

Thus, an increase in ambient noise of less than 2 dBA, especially on a temporary basis, would be considered insignificant.

Furthermore, in response to Data Request #76, the Applicant collected ambient noise data at two additional locations:

> **Location 1 –** In side yard of residence at Antelope Road and Adams Road at the northwest corner of the Romoland Elementary School.
>
> **Location 2 –** Further north on Antelope Road at the intersection of 3rd Street at the northeast corner of the densest residential portion of Romoland.

The estimated noise levels associated with high-pressure steam blows at these two locations are shown in Table 76-2. Again, these are the maximum noise levels predicted to occur only when steam is being released.

Table 76-2
Estimated Total Facility Noise Levels at Two Additional Locations during High-Pressure Steam Blow Activities

Location	Estimated Energy Center Noise Level, dBA
Location 1. Antelope Road and Adams Road (near northwest corner of Romoland School)	45
Location 2. Antelope Road and 3rd Street (northeast corner of densest residential portion of Romoland)	41

The daytime (7 a.m. to 10 p.m.) ambient noise level averaged 64.7 dBA at Location 1 and 72.2 at Location 2 (calculated using L_{eq} values from Revised Table 76-1). Conservatively combining the maximum estimated steam blow noise with the existing average ambient noise results in projected overall average noise level increases of less than 0.1 dBA at these two locations. Again, increases in ambient noise of this magnitude would be considered insignificant.

Although the Applicant responded to Data Request #74 by providing projected noise information representative of high-pressure steam blow activities, Calpine's startup group has been experiencing good results on other projects using low-pressure steam blows. Low-pressure steam blows are similar to high-pressure steam blows in that the primary cleaning mechanism is the steam passing over the interior surfaces of the piping at high velocity. The key differences are; 1) the low-pressure process results in a continuous release of steam, whereas the high-pressure process results in intermittent releases of steam, and 2) the low-pressure process is quieter than the high-pressure process. Similar to the high-pressure steam blow process, a good quality silencer is installed on the discharge end of the pipe to reduce noise emissions. In addition, quench water is injected into the piping upstream of the discharge accomplishing two objectives. First, the injected water causes a large portion of the steam to condense, thus reducing the exit velocity and therefore the noise produced. Second, the condensing steam creates a local drop in pressure increasing the steam velocity through the portion of piping being cleaned. The rate at which the quench water is injected is optimized to minimize the noise produced. With the low-pressure steam blow process, the noise level at the outlet of the silencer can be expected to be less than 80 dBA at 30 feet as compared to the high-pressure steam blow process, which results in noise levels of approximately 86 dBA at 100 feet.

To assess the impact of such a noise source on the surrounding sensitive receptors, the plant noise model was modified to represent the low-pressure steam blow operation; specifically, the northern CTG/HRSG power train was assumed to be operating normally and a source was added representing the steam blow silencer discharge producing a level of 80 dBA at 30 feet. In such a scenario the second CTG, the STG and cooling tower would not be operating and were turned off in the model.

Table 76-3 lists the estimated noise levels resulting from low-pressure steam blow activities at the four nearest sensitive receptors. The noise levels indicated primarily represent the noise produced by operation of the CTG/HRSG power train and ancillary equipment, not the noise resulting from the discharge of steam. Since much of the plant equipment is not operating during steam blows, these noise levels are actually lower than the noise levels predicted for normal operation of the energy center.

Table 76-3
Estimated Total Facility Noise Levels at Nearest Sensitive Receptors during Low-Pressure Steam Blow Operations

Location	Estimated Energy Center Noise Level, dBA
DP-1. Ethanac Road	42
DP-2. McLaughlin & Dawson Roads	36
DP-3. McLaughlin & Palomar Roads	37
DP-4. Highway 74 North of Site	42

Low-pressure steam blow activities are typically conducted on an around-the-clock basis (i.e. 24 hours/day), thus it is appropriate to compare the noise associated with steam blow activities to a 24-hour noise level. For this comparison, the Community Noise Equivalent Level (CNEL) was used as this noise index penalizes evening and nighttime noise levels, accounting for greater human sensitivities to noise during these times. At Site 1, the existing CNEL was calculated to be 62.4 dBA and, at Site 2, the existing CNEL was calculated to be 56.4 dBA (ref. CNEL values from AFC Table 5.9 3). Combining the estimated steam blow noise with the existing average ambient noise results in projected overall CNEL's of 62.5 dBA at Site 1 and 56.6 dBA at Site 2, or an increase of 0.1 and 0.2 dBA, respectively. Increases in ambient noise of this magnitude would be considered insignificant.

The estimated noise levels associated with low-pressure steam blows at the two additional locations defined in Data Request #74 are shown in Table 76-4.

Table 76-4
Estimated Total Facility Noise Levels at Two Additional Locations during Low-Pressure Steam Blow Activities

Location	Estimated Energy Center Noise Level, dBA
Location 1. Antelope Road and Adams Road (near northwest corner of Romoland School)	38
Location 2. Antelope Road and 3rd Street (northeast corner of densest residential portion of Romoland)	32

At Location 1, the existing CNEL was calculated to be 65.1 dBA, and at Location 2, the existing CNEL was calculated to be 67.7 dBA (ref. CNEL values from the Revised Table 76-1). Combining the estimated steam blow noise with the existing ambient noise results in a non-detectable increase in the projected overall CNEL's. This is because the existing ambient noise levels are so much greater than the estimated low-pressure steam blow noise.

The Applicant would like to reserve the ability to perform high-pressure steam blows, low-pressure steam blows, or a combination of high-pressure and low-pressure steam blows. If any high-pressure steam blows are performed, they will be conducted during daytime hours (7 a.m. to 9 p.m.) to minimize the potential for disturbance at the closest sensitive receptors. If low-pressure steam blows are used, it is the Applicant's intent to perform steam blow operations 24 hours per day, thus shortening the overall duration of steam blow activities.

HAZARDOUS MATERIALS RESPONSES

Workshop Request 1-2 – During the February 26, 2002 Hazardous Materials workshop, CEC staff asked, per Data Request 56, if it would be feasible to relocate the hydrogen storage to the southern portion of the energy center, thus increasing its distance from Romoland School. The Applicant agreed that this would be feasible at which point CEC staff requested that a figure be provided showing the revised hydrogen storage location.

> **Revised Response 56 –** Figure 56-1, originally included with Data Response #56 submitted on February 12, 2002, has been revised to show the new hydrogen storage location (D), immediately south of the steam turbine generator.

Workshop Request 1-3 – During the February 26, 2002 Hazardous Materials workshop, CEC staff requested, per Data Request 56, that the Applicant advise which standards would apply to the location of hydrogen storage relative to combustible materials, potential sources of ignition, etc.

> **Addendum #1 to Data Response 56 –** The Applicant intends to follow National Fire Protection Association (NFPA) 50A, Standard for Gaseous Hydrogen Systems at Consumer Sites. The portions of this standard relating to the location of hydrogen storage facilities are summarized in AFC Tables 3-2.1 and 3-2.2, with the column heading "In Excess of 15,000 scf (425 m^3)" applying to the Inland Empire Energy Center (IEEC). AFC Table 3-2.1 indicates that the preferred storage location is outdoors, as is planned for the IEEC. AFC Table 3-2.2 indicates minimum clearances from various exposures. For the IEEC, the governing clearances will be; 1) 50 ft from the steam turbine generator step-up transformer and steam turbine lube oil tank, which each contain more than 1,000 gallons of a flammable and combustible liquid, 2) 50 ft from any ventilation inlets to the water treatment building, and 3) 25 ft from the oil storage area, south of the water treatment building (less than 1,000 gallons of flammable and combustible liquid). In addition, as per Paragraph 4-1.2 of NFPA 50A, electrical equipment within 15 ft of the hydrogen storage location will be in accordance with Article 501 of NFPA 70, National Electrical Code, for Class I, Division 2 locations. See IEEC Workshop No. 1, Hazardous Materials Attachment 1 for NFPA data.

Workshop Request 1-4 – During the February 26, 2002 Hazardous Materials workshop, CEC staff requested, per Data Request 53, that the Applicant update the ammonia based offsite consequence analysis per Data Request #53, to include the following; (1) modeling for the ERPG-2 level of 150 ppm - 1 hour average, (2) updated concentration vs. distance figures with toxic endpoints for each analysis level clearly indicated, (3) a tabular listing of downwind ammonia concentrations vs. distance which indicates the concentration of ammonia specifically for the Romoland School, and (4) provide a revised version of Figure 54-1.

> **Revised Response 53** – The Inland Empire Energy Center (IEEC) is required by both the Clean Air Act and the South Coast Air Quality Management District to install Best Available Control Technology to control emissions of criteria air pollutants from the combustion turbines. The IEEC turbines will incorporate dry low NO_x combustors that reduce emissions of oxides of nitrogen (NO_x), carbon monoxide (CO), and volatile organic compounds (VOC). In addition, the turbines (and duct burner) emissions of NO_x will be further reduced through the use of selective catalytic reduction (SCR). The SCR control system utilizes ammonia as the reduction medium in the presence of a catalyst. Two forms of ammonia may be used in

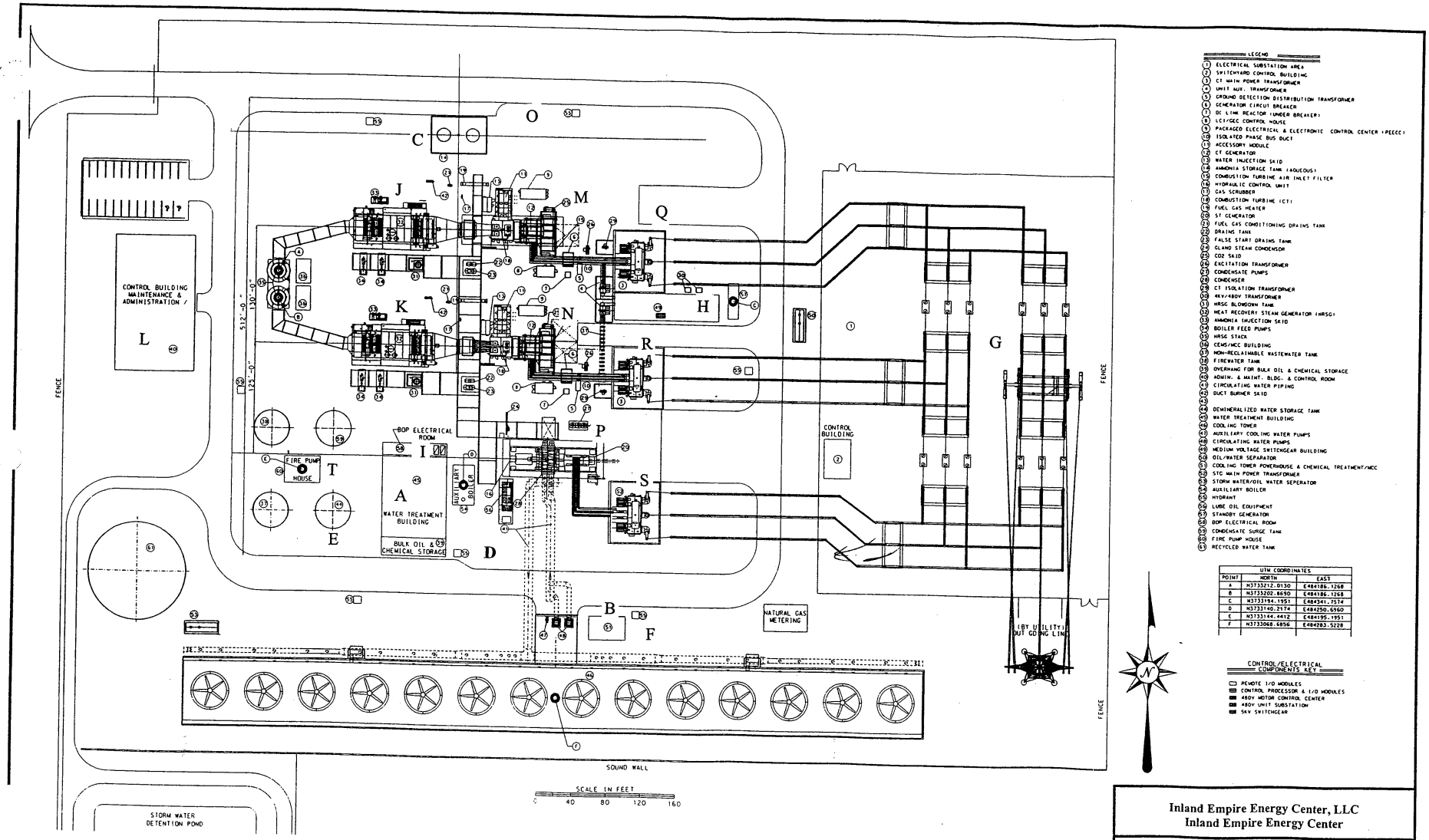

UTM COORDINATES		
POINT	NORTH	EAST
A	N3733212.0130	E484186.1268
B	N3733202.8690	E484186.1268
C	N3733194.1951	E484341.7574
D	N3733140.2174	E484250.6560
E	N3733144.4412	E484195.1951
F	N3733068.6856	E484203.5228

Inland Empire Energy Center, LLC
Inland Empire Energy Center

Figure 56-1
Hazardous Materials Locations

currently designed SCR systems, i.e., anhydrous ammonia or aqueous ammonia. The IEEC facility is proposing to use aqueous ammonia in a 28.0% (by weight) solution. Chapter 3.0 of the AFC contains a detailed description of the facility location and process data. Figure 3.3-2 (Chapter 3.0) shows the facility site plan. The aqueous ammonia tank is delineated as structure "14". Aqueous ammonia is a water based ammonia solution, which can be mixed and delivered, in a wide variety of solution ratios. Solution mix ratios less than 30% (weight basis) are the most common. Aqueous ammonia solutions typically have a boiling point of approximately 83 deg F. When spilled, aqueous ammonia solutions will slowly vaporize, releasing ammonia vapors. According to data prepared for the CEC by Ebasco (*Ammonia Release Risk Mitigation Guidance for Power Plants-Draft Report, November 1989*) when ammonia is diluted with water to solutions of less than or equal to 20% by volume, evaporation of ammonia gas from the fluid becomes negligible. The guidance further states that when ammonia is diluted with water at ambient temperatures to solutions less than 25% by weight, ammonia vapor pressure is reduced to atmospheric pressure, i.e., the evaporation of ammonia gas from the fluid would be negligible. A 28% solution of aqueous ammonia has an approximate vapor pressure of 483 mm/Hg at 70 deg F.

The Code of Federal Regulations 40 (CFR) Part 68 and California Code of Regulations (CCR), Division 2, Chapter 4.5 regulate the potential accidental release of hazardous materials. Article 8, Section 2770.5 includes tables of federally (Tables 1 and 2) and state regulated substances including threshold quantities for regulation under the accidental release prevention program. Because IEEC will store ammonia in excess of 500 pounds (see Table 3), IEEC is required to complete an Off-Site Consequence Analysis that is included below.

Accidental releases of ammonia (all forms) in industrial use situations are rare. Statistics compiled on the normalized accident rates for RMP chemicals for the years 1994-1999 from *Chemical Accident Risks in U.S. Industry-A Preliminary Analysis of Accident Risk Data from U.S. Hazardous Chemical Facilities, J. C. Belke, Sept 2000,* indicates that ammonia averages 0.017 accidental releases per process per year, and 0.018 accidental releases per million pounds stored per year. Data derived from *The Center for Chemical Process Safety, 1989*, indicates the following accidental release scenarios and probabilities for ammonia in general.

Accident Scenario	**Failure Probability**
Onsite Truck Release	0.0000022
Loading Line Failure	0.005
Storage Tank Failure	0.000095
Process Line Failure	0.00053
Evaporator Failure	0.00015

IEEC will store aqueous ammonia in two (2) stationary, fixed roof storage tanks. The tank capacity will be approximately 16,000 gallons each. The tanks will be enclosed by a containment berm capable of containing the full contents of the tanks as well as incidental rainwater. The approximate berm dimensions are as follows:

- Length 62 ft.
- Width 42 ft.
- Depth 2.5 ft.

- Capacity = 48,695 gallons

The surface area of the bermed area will be 2604 sq. ft. (241.9 sq.m), and the volume will be approximately 48,695 gallons.

An offsite consequence analysis (OCA) was performed for the release scenario involving the complete failure and discharge of the storage tank contents into the secondary containment area. In addition, an alternative release scenario was also evaluated, i.e., failure of the truck unloading hose with a resultant spill to the truck unloading pad with flow to the capture sump.

Table 53-1 shows the meteorological data values used in the modeling scenarios.

Table 53-1
Meteorological Data for Release Scenarios

Parameter	Worst Case Met	Alternate Case Met
Wind Speed m/sec	1.5	3
Stability Class	F	D
Relative Humidity %	50	50
Ambient Temperature deg C	37.56[1]	25

[1] San Jacinto Met Station, Highest Annual Temperature, Western Regional Climatic Center.

A total of six (6) modeling runs were conducted, i.e., tank failure and truck unloading hose failure for the met scenarios listed in Table 53-1, and the action levels as follows:

- RMP Te of 201 ppm (1 hour average)
- ERPG-2 level of 150 ppm (1 hour average)
- CEC LoC of 75 ppm (30 min average)

OCA modeling was conducted using the SLAB model. A complete description of the SLAB model is available in *User's Manual for SLAB: An Atmospheric Dispersion Model for Denser-Than-Air-Releases, D. E. Ermak, Lawrence Livermore National Laboratory, June 1990*. The current version of SLAB is accompanied by an external substance database which includes chemical specific data for ammonia. This data was used in all modeling runs without exception or modification except for the "cmedo" value which was calculated for each release scenario (see attached calculations).

Emissions of ammonia from the aqueous ammonia solution were calculated pursuant to the equations and guidance given in *RMP Offsite Consequence Analysis Guidance, EPA, April 1999*. The equation used to predict the emissions is as follows;

$$QR=(1.4)(LFA)(A) \qquad \text{Eq 1.}$$

Where QR = emissions rate, lbs/min

LFA = liquid factor ambient (0.026, 30% solution)

A = diked surface area, sq. ft.

Unadjusted emissions for the tank rupture scenario would be as follows:

$$QR=(1.4)(0.026)(2604)$$

= 94.8 lbs/min

for a 10 minute release

= 948 lbs/10 minutes

Emissions adjusted for the temperature correction factor of 1.558 for the worst-case scenario would be:

TCF = 1.558

94.8 lbs/min X 1.558

= 147.7 lbs/min

= 1477 lbs/10 minutes

Please note that per *Risk Management Program Guidance for WWTPs, EPA-OSWER, October 1998*, ammonia emissions from the diked area are only calculated for the first 10 minutes of the spill life. EPA states that the release of ammonia from the aqueous solution should only be used for the first 10 minutes after which the ammonia in the pool (diked area) will be more dilute than it was initially and will be evaporating much less rapidly. This assumption applies to both release scenarios.

Emissions for the truck unloading hose failure scenario would be as follows:

Hose length = 25 ft.

Hose diameter (ID) = 4 in.

Hose volume = 2.2 cu. ft. or 16.5 gallons

For conservative purposes, the hose volume was doubled to account for truck drainage losses.

Total product spilled = 33 gallons

@ ~7.5 lbs/gal

= 247.5 lbs spilled to truck pad surface

Truck unloading pad dimensions are as follows:

Length = 74 ft.

Width = 20 ft.

The truck pad is constructed with a slope which causes any spilled material to drain to the middle of the pad and then directly to a sump (See Revised Figure 54-1 as requested by CEC staff). The sump is sized to hold 8 cubic feet of product or approximately 60 gallons. The sump surface area is 4 sq. ft. For purposes of this analysis, any spill in the pad area was assumed to cover an area of 100 sq. ft. as the material drained to the sump. Although a slight amount of emissions would evolve from the surface area exposed to the spill prior to draining to the sump, this emission is considered negligible, but for purposes of conservatism, the spill

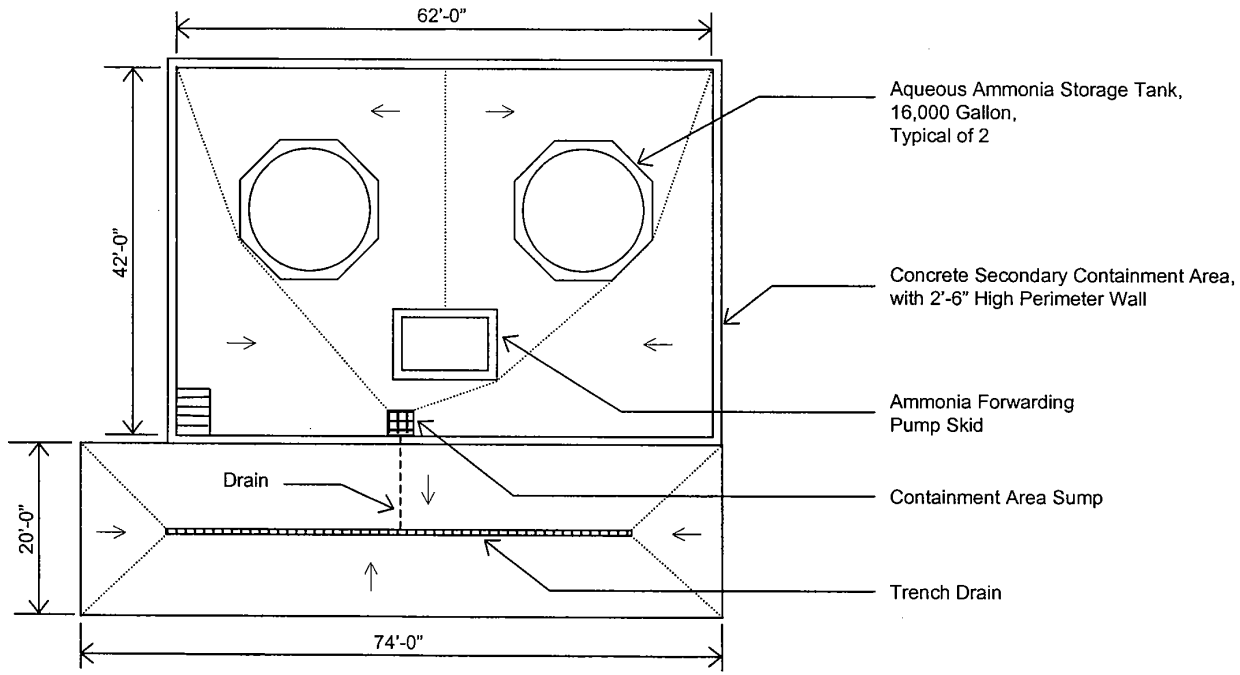

PLAN
NTS

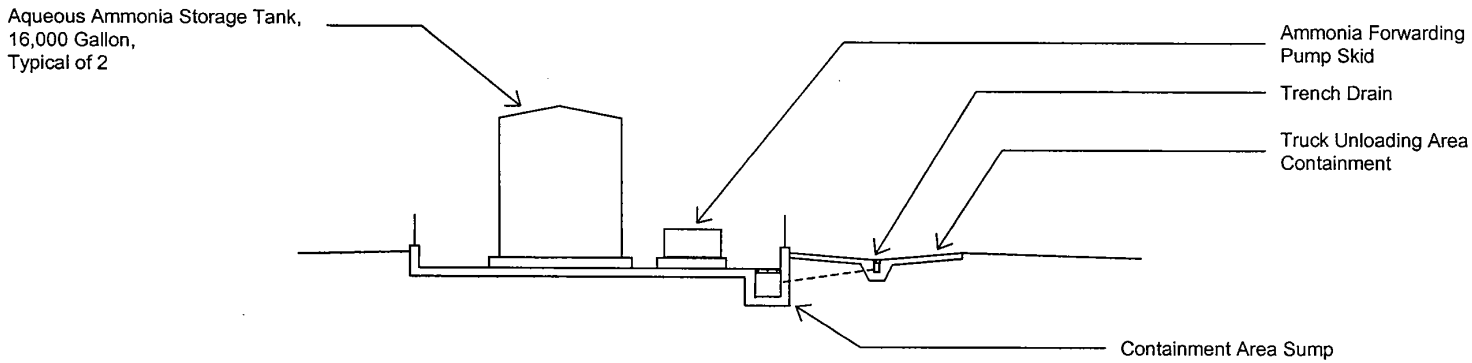

SECTION
NTS

Revised Figure 54-1

area emissions were assumed to be equal to the sump emissions. Emissions from the sump were calculated using Eq. 1 and the necessary temperature adjustment was made as delineated above. Emissions from the hose rupture scenario are:

0.23 lbs/min or 2.3 lbs/10 mins (sump only)

2.3 lbs/10 mins X 2 = 4.6 lbs/10 mins (sump and pad)

Based on a spill volume of 33 gallons, the total ammonia contained in the spill would be approximately 69.3 lbs. The above emissions represent a loss rate of approximately 7% over the 10-minute period recommended by EPA.

The specified action level values for ammonia were delineated above. These values are based on either a one-hour or 30 minute exposure, therefore, the modeling concentrations at all offsite receptors will be given in terms of one-hour or 30 minute exposures dependent upon the action level being evaluated.

The ammonia storage and unloading area is located at the following UTM coordinates: 484248.303m E, 3733260.169m N. Table 53-2 presents data on the identified sensitive receptors (per the AFC) and the distances from the tank/unloading area. The tank/unloading area is approximately 38m from the nearest main facility fence line (to the north) and 146m from the nearest outer property line (to the west). Table 53-2 delineates the sensitive receptors within 2 km of the tank area.

Table 53-2
Sensitive Receptors Within 2 KM of the Ammonia Storage Area.

Receptor Name	Receptor Type	Direction from IEEC	Distance from IEEC Tank Area
Romoland Headstart	Daycare	NNW	390 m
Romoland Elementary School	School	NNW	360 m

Table 53-3 delineates a summary of the OCA results. It should be noted that the SLAB model does not delineate output, i.e., concentration vs. distance at fixed increments from the source. Table 53-3 gives data for representative downwind distances as derived from the the available output files. Intermediate values not shown in the table can be derived from Figures 53-1 through 53-6.

Figures 53-1 through 53-6 show the individual scenario results in terms of concentration vs. downwind distance for each of the scenarios and action levels delineated above. Figures 53-1A and 53-3A are presented in order to present the nearfield concentration values for the worst case tank release as compared to Figures 53-1 and 53-3.

As can be seen in the figures and Table 53-3, ammonia concentrations at the Romoland School site are less than or equal to 1 ppm. This level of exposure is considered insignificant and would result in no known or discernable health impacts to any member of the school population.

Haz Mat Attachment 1, included in the February 12th Data Responses, contains support weather and climate data. The revised (hardcopy) modeling input/output files are attached to

Table 53-3
OCA Scenario Summary

Distance (m)	Concentrations - ppm* Worst Case RMP Te	Distance (m)	Alt. Case RMP Te
10	3070	10	74
20	1	20	36
Fenceline	1	Fenceline	13
100	1	100	2
300	1	300	1
360	1	360	1
500	1	500	1
1000	1	1000	1
1500	1	1500	1
2000	1	2000	1

Distance (m)	Concentrations - ppm* Worst Case ERPG-2	Distance (m)	Alt. Case ERPG-2
10	3070	10	74
20	1	20	36
Fenceline	1	Fenceline	13
100	1	100	2
300	1	300	1
360	1	360	1
500	1	500	1
1000	1	1000	1
1500	1	1500	1
2000	1	2000	1

Distance (m)	Concentrations - ppm* Worst Case CEC LoC	Distance (m)	Alt. Case CEC LoC
10	6080	10	148
20	2.3	20	71
Fenceline	1	Fenceline	26
100	1	100	4
300	1	300	1
360	1	360	1
500	1	500	1
1000	1	1000	1
1500	1	1500	1
2000	1	2000	1

RMP Te = 201 ppm (1 hour avg)
ERPG-2 = 150 ppm (1 hour avg)
CEC LoC = 75 ppm (30 min avg)
Shaded values are concentrations at Romoland Elementary School
* Time averaged concentrations at x,y,z where y=0m and z=1.5m and x = downwind distance (m)
Values less than 1 ppm are recorded as 1 ppm.

Figure 53-1
1.5 Meter Centerline Plot
Worst Case Tank Release

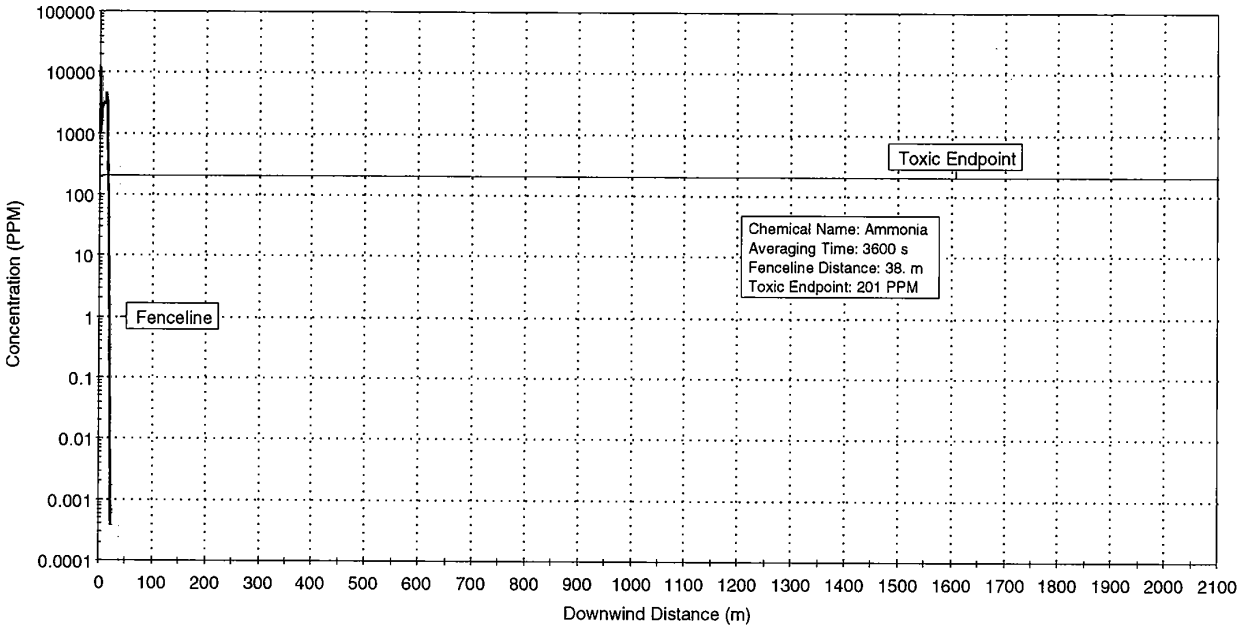

Figure 53-1A
1.5 Meter Centerline Plot
Worst Case Tank Release

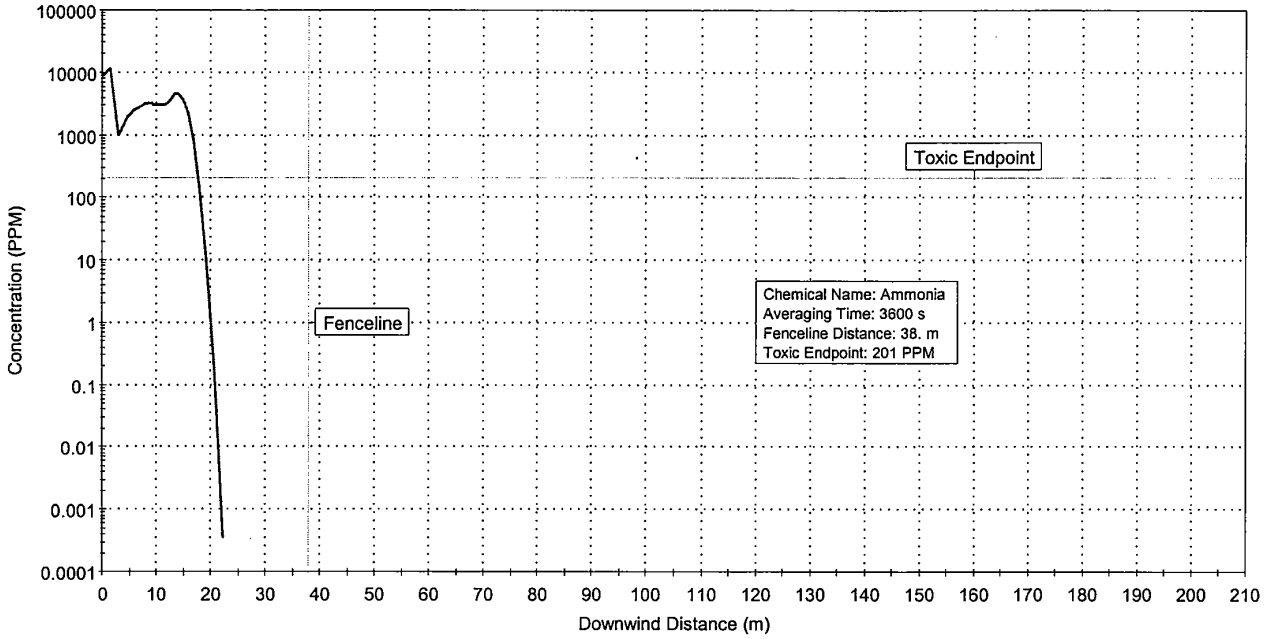

Figure 53-2
1.5 Meter Centerline Plot
Worst Case Tank Release

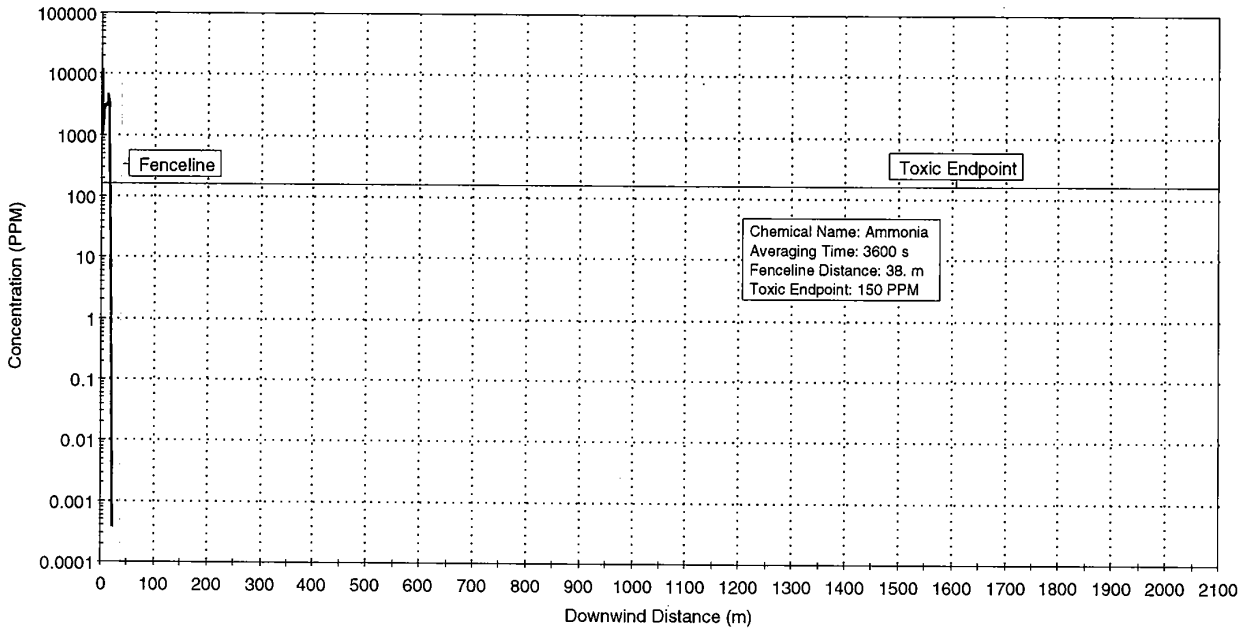

Figure 53-3
1.5 Meter Centerline Plot
Worst Case Tank Release

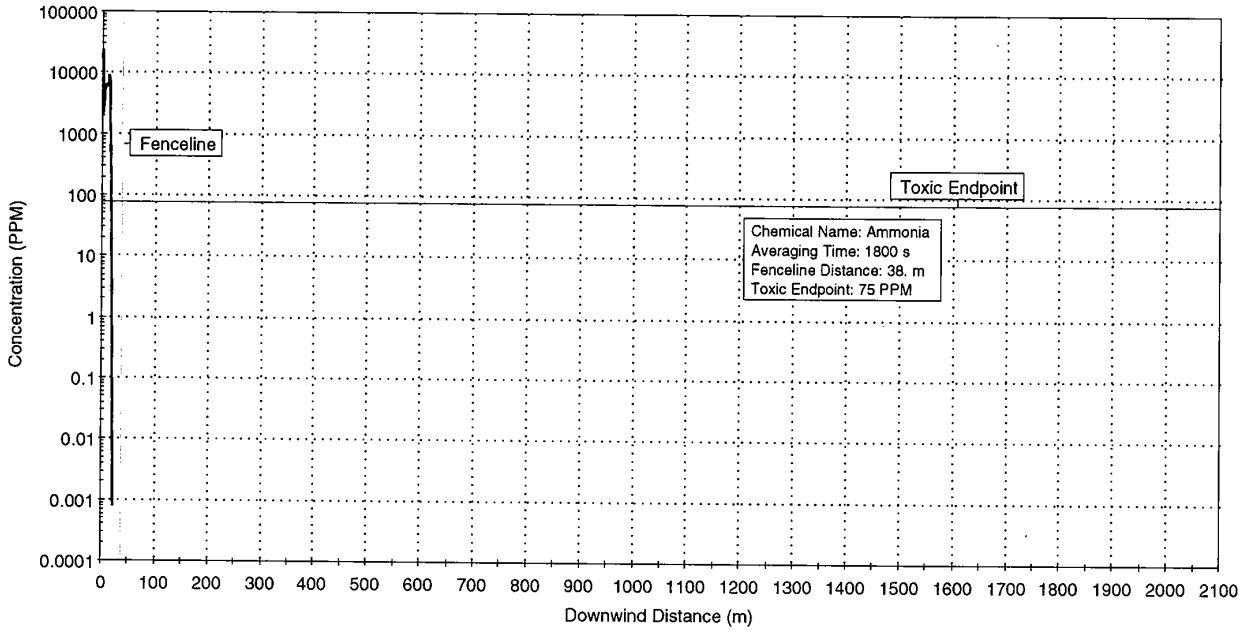

Figure 53-3A
1.5 Meter Centerline Plot
Worst Case Tank Release

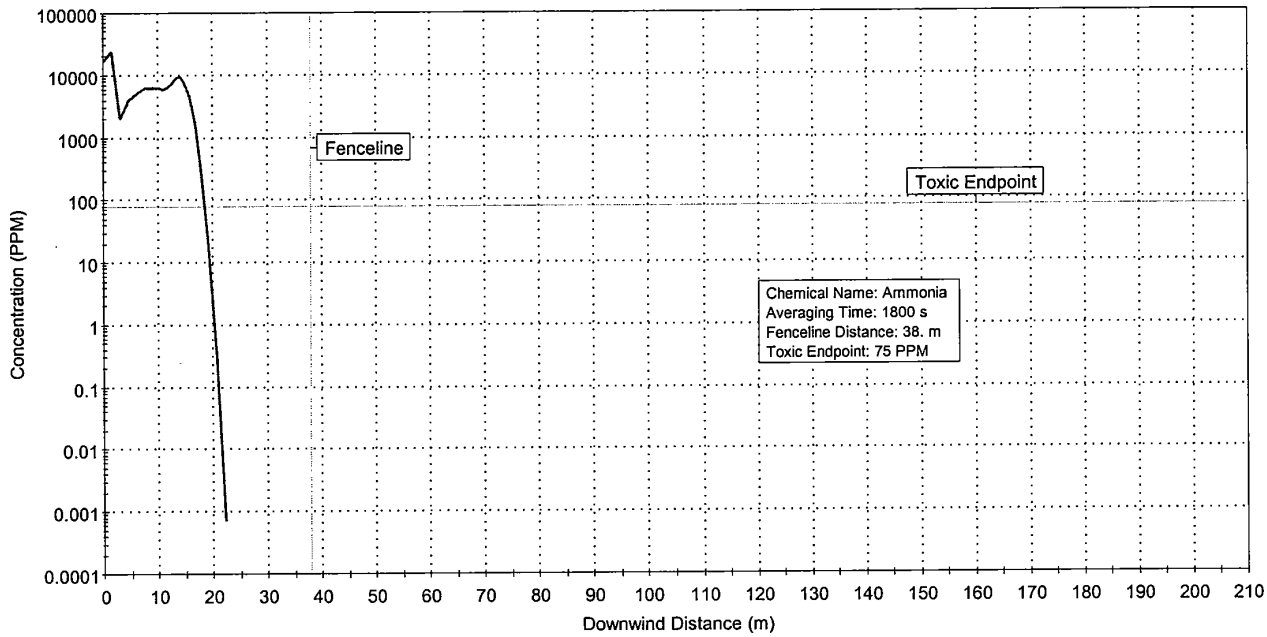

Figure 53-4
1.5 Meter Centerline Plot
Alternate Case Hose Release

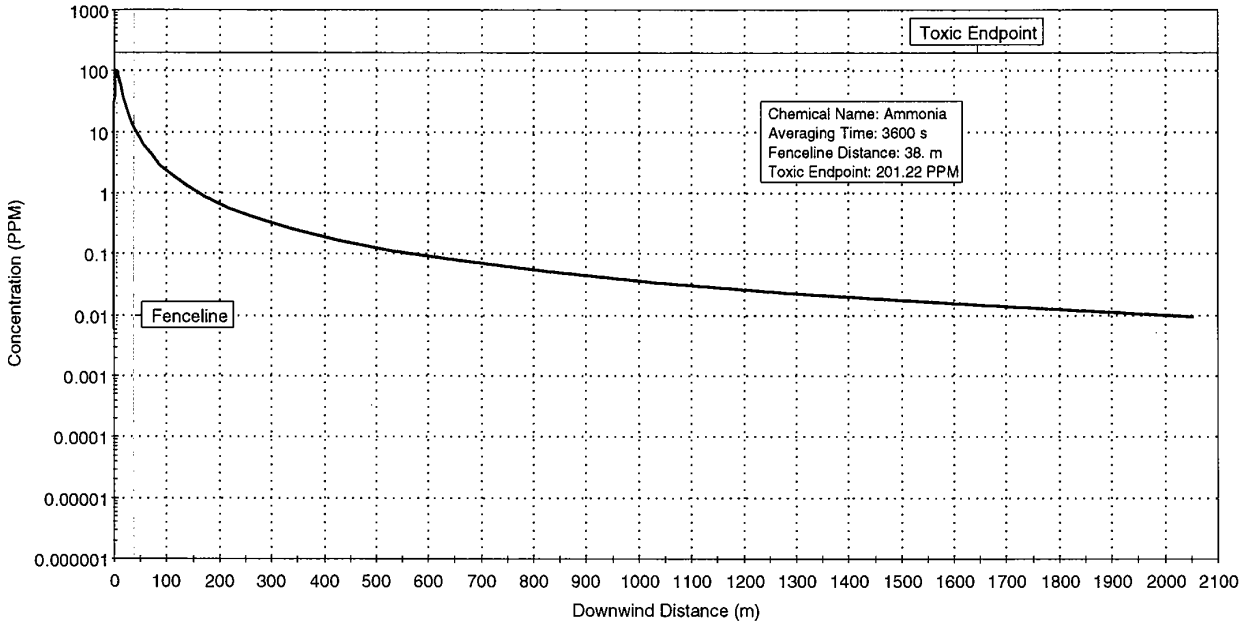

Figure 53-5
1.5 Meter Centerline Plot
Alternate Case Hose Release

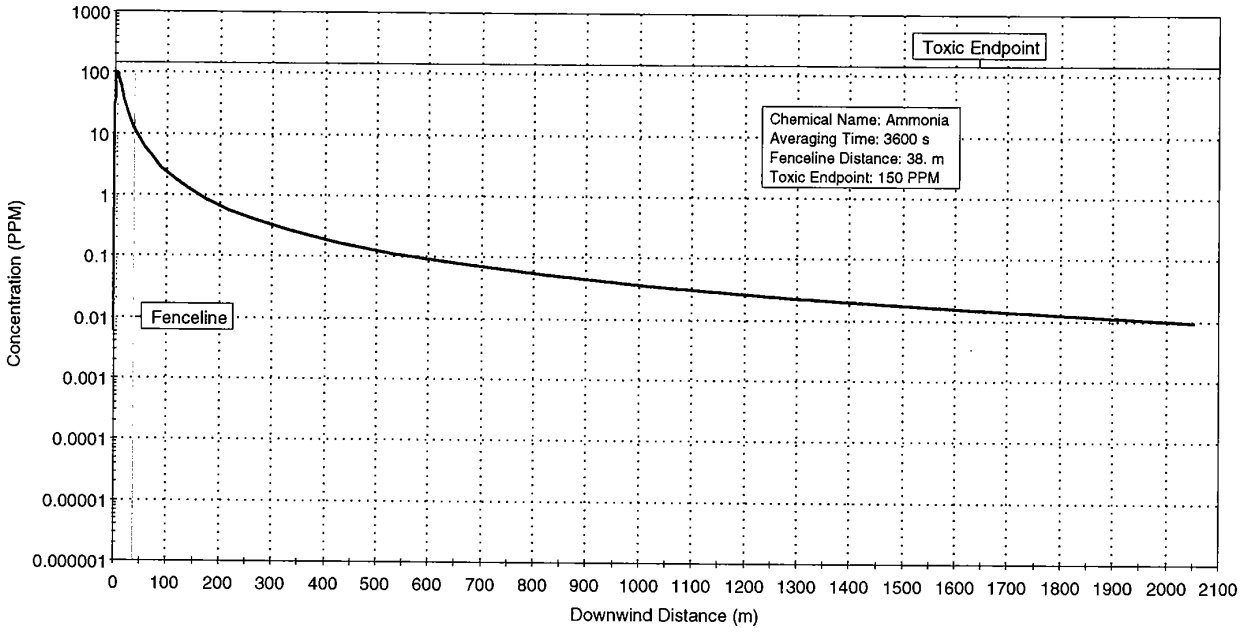

Figure 53-6
1.5 Meter Centerline Plot
Alternate Case Hose Release

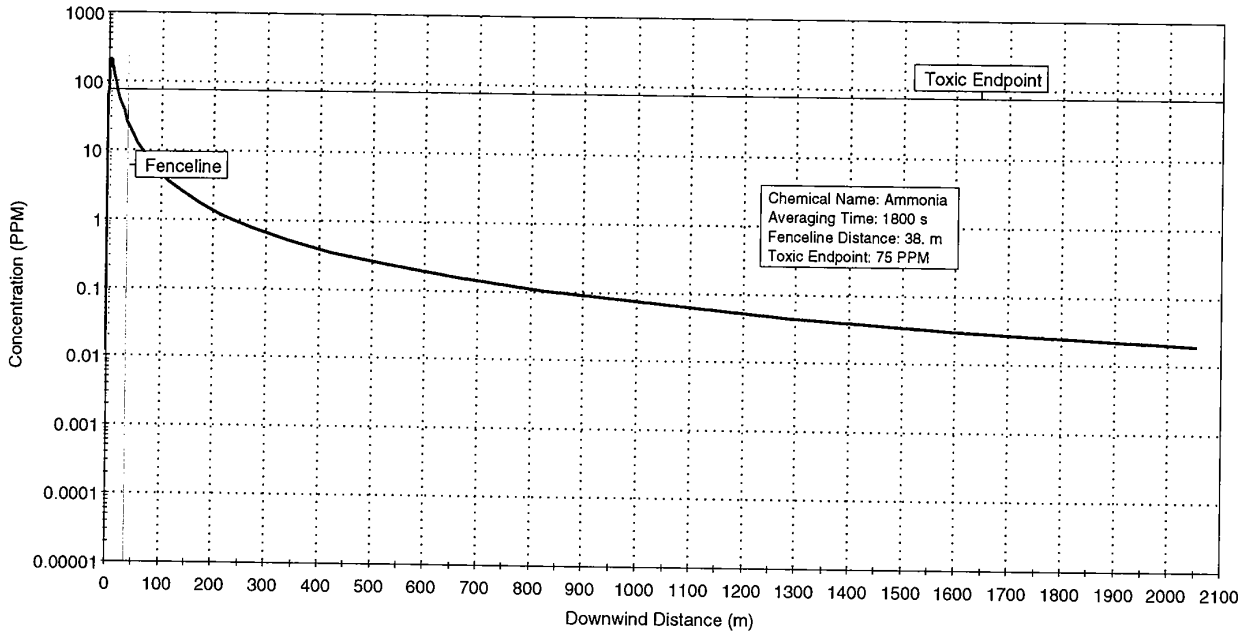

this analysis (See IEEC Hazardous Materials Workshop No. 1 Responses Attachment 2) and the input/output files are also supplied on diskettes (4) for CEC staff use.

HAZARDOUS MATERIALS

ATTACHMENT 1

NFPA HYDROGEN STORAGE DATA

NFPA 50A
Standard for Gaseous Hydrogen Systems at Consumer Sites

1999 Edition

National Fire Protection Association, 1 Batterymarch Park, PO Box 9101, Quincy, MA 02269-9101
An International Codes and Standards Organization

Separate Building. A detached, noncommunicating building used exclusively to house a hydrogen system.

Shall. Indicates a mandatory requirement.

Special Room. A separate enclosed area that is part of or attached to another building and is used exclusively for a hydrogen system.

Standard. A document, the main text of which contains only mandatory provisions using the word "shall" to indicate requirements and which is in a form generally suitable for mandatory reference by another standard or code or for adoption into law. Nonmandatory provisions shall be located in an appendix, footnote, or fine-print note and are not to be considered a part of the requirements of a standard.

Standard Cubic Foot (scf). One cubic foot of gas at 70°F (21°C) and 14.7 psia (an absolute pressure of 101 kPa).

Chapter 2 Design of Gaseous Hydrogen Systems

2-1 Containers.

2-1.1 Hydrogen containers shall comply with one of the following:

(a) Designed, constructed, and tested in accordance with appropriate requirements of ASME *Boiler and Pressure Vessel Code*, Section VIII, "Rules for the Construction of Pressure Vessels"

(b) Designed, constructed, tested, and maintained in accordance with 49 *CFR* 171–190

2-1.2 Permanently installed containers shall be provided with substantial supports of noncombustible material on firm foundations of noncombustible material.

2-1.3 Each portable container shall be legibly marked with the name HYDROGEN in accordance with ANSI/CGA C-4, *Method of Marking Portable Compressed Gas Containers to Identify the Material Contained.* Each manifold hydrogen supply unit shall be legibly marked with the name HYDROGEN or a legend such as "This unit contains hydrogen."

2-2 Pressure Relief Devices.

2-2.1 Hydrogen containers shall be equipped with pressure relief devices as required by the ASME *Code* or the DOT *Specifications and Regulations* under which the container is fabricated.

2-2.2 Pressure relief devices shall be arranged to discharge upward and unobstructed to the open air in such a manner as to prevent any impingement of escaping gas upon the container, adjacent structures, or personnel. This requirement shall not apply to DOT specification containers having an internal volume of 2.0 ft^3 (0.057 m^3) or less.

2-2.3 Pressure relief devices or vent piping shall be designed or located so that moisture cannot collect and freeze in a manner that would interfere with proper operation of the device.

2-3 Piping, Tubing, and Fittings.

2-3.1 Piping, tubing, and fittings shall be suitable for hydrogen service and for the pressures and temperatures involved. Cast-iron pipe and fittings shall not be used.

2-3.2 Material specifications and thickness requirements for piping and tubing shall conform to ASME B31.3, *Code for Chemical Plant and Petroleum Refinery Piping.*

2-3.3 Joints in piping and tubing shall be made by welding or brazing or by use of flanged, threaded, socket, slip, or compression fittings. Gaskets and thread sealants shall be suitable for hydrogen service. Brazing materials shall have a melting point above 1000°F (538°C).

2-4 Equipment Assembly.

2-4.1 Valves, gauges, regulators, and other accessories shall be recommended for hydrogen service by the manufacturer or the hydrogen supplier.

2-4.2 Installation of hydrogen systems shall be supervised by personnel familiar with proper practices with reference to their construction and use.

2-4.3 Storage containers, piping, valves, regulating equipment, and other accessories shall be accessible and shall be protected against physical damage and against tampering by the general public.

2-4.4 Cabinets or housings containing hydrogen control or operating equipment shall be ventilated to minimize accumulation of hydrogen.

2-4.5 Each mobile hydrogen supply unit used as part of a hydrogen system shall be secured to prevent movement.

2-4.6 Mobile hydrogen supply units shall be electrically bonded to the system before discharging hydrogen.

2-5 Marking. The hydrogen storage location shall be permanently placarded either as follows or with equivalent wording:

HYDROGEN — FLAMMABLE GAS
NO SMOKING — NO OPEN FLAMES

2-6 Testing. After installation, all piping, tubing, and fittings shall be tested and proved hydrogen gas–tight at maximum operating pressure.

Chapter 3 Location of Gaseous Hydrogen Systems

3-1 General Requirements.

3-1.1 The system shall be located so that it is accessible to delivery equipment and to authorized personnel. Roadways or other means of access for emergency equipment, such as fire department apparatus, shall be provided.

3-1.2 Systems shall be located above ground either at grade or above grade.

3-1.3 Systems shall not be located beneath or where exposed to failure of the following:

(a) Electric power lines

(b) Piping containing all classes of flammable or combustible liquids *(see definition in Section 1-5)*

(c) Piping containing other flammable gases, or piping containing oxidizing materials

3-1.4 Systems within 50 ft (15 m) of aboveground storage of all classes of flammable and combustible liquids shall be located on ground higher than such storage, except where dikes, diversion curbs, grading, or separating solid walls are used to prevent accumulation of these liquids under the system.

Table 3-2.1 Preferred Locations of Gaseous Hydrogen Systems

Nature of Location	Size of Hydrogen System: Less than 3500 scf (99 m³)	3500 scf to 15,000 scf (99 m³ to 425 m³)	In Excess of 15,000 scf (425 m³)
Outdoors	I	I	I
In a separate building	II	II	II
In a special room	III	III	Not permitted
Inside buildings not in a special room or exposed to other occupancies	IV	Not permitted	Not permitted

3-2. Specific Requirements.

3-2.1 The location of a system, as determined by the maximum total contained volume of hydrogen, shall be in the order of preference as indicated by Roman numerals in Table 3-2.1.

3-2.2 The minimum distance in feet from a hydrogen system of indicated capacity located either outdoors, in separate buildings, or in special rooms to any specified outdoor exposure shall be in accordance with Table 3-2.2. The distances in numbers 1, 3 through 10, and 14 inclusive in Table 3-2.2 shall not apply where protective structures having a minimum fire resistance rating of 2 hours are located between the system and the exposure.

Table 3-2.2 Minimum Distance from Outdoor Gaseous Hydrogen Systems to Exposures

Type of Outdoor Exposure	Total Gaseous Hydrogen Storage: Less than 3500 scf (99 m³) ft	m	3500 scf to 15,000 scf (99 m³ to 425 m³) ft	m	In Excess of 15,000 scf (425 m³) ft	m
1. Building or structure						
(a) Wall(s) adjacent to system constructed of noncombustible or limited-combustible materials						
(1) Sprinklered building or structure or unsprinklered building or structure having noncombustible contents	0[a]	0	5[a]	1.5	5[a]	1.5
(2) Unsprinklered building or structure with combustible contents						
Adjacent wall(s) with fire resistance rating less than 2 hours[b]	0[c]	0	10	3.1	25[d]	7.6
Adjacent wall(s) with fire resistance rating of 2 hours or greater[b]	0	0	5	1.5	5	1.5
(b) Wall(s) adjacent to system constructed of other than noncombustible or limited-combustible materials	10	3.1	25	7.6	50[d]	15.2
2. Wall openings						
(a) Not above any part of a system	10	3.1	10	3.1	10	3.1
(b) Above any part of a system	25	7.6	25	7.6	25	7.6
3. All classes of flammable and combustible liquids above ground						
(a) 0–1000 gal (3785 L)	10	3.1	25	7.6	25	7.6
(b) In excess of 1000 gal (3785 L)	25	7.6	50	15.2	50	15.2
4. All classes of flammable and combustible liquids below ground — 0–1000 gal (3785 L)[e]						
(a) Tank	10	3.1	10	3.1	10	3.1
(b) Vent or fill opening of tank	25	7.6	25	7.6	25	7.6
5. All classes of flammable and combustible liquids below ground — in excess of 1000 gal (3785 L)[e]						
(a) Tank	20	6.1	20	6.1	20	6.1
(b) Vent or fill opening of tank	25	7.6	25	7.6	25	7.6

(continues)

Table 3-2.2 Minimum Distance from Outdoor Gaseous Hydrogen Systems to Exposures *(continued)*

Type of Outdoor Exposure	Total Gaseous Hydrogen Storage					
	Less than 3500 scf (99 m³)		3500 scf to 15,000 scf (99 m³ to 425 m³)		In Excess of 15,000 scf (425 m³)	
	ft	m	ft	m	ft	m
6. Flammable gas storage (other than hydrogen), either high pressure or low pressure						
(a) 0–15,000 scf (255 m³) capacity	10	3.1	25	7.6	25	7.6
(b) In excess of 15,000 scf (255 m³) capacity	25	7.6	50	15.2	50	15.2
7. Oxygen storage						
(a) 20,000 scf (566 m³) or less	Refer to NFPA 51, *Standard for the Design and Installation of Oxygen-Fuel Gas Systems for Welding, Cutting, and Allied Processes*					
(b) More than 20,000 scf (566 m³)	Refer to NFPA 50, *Standard for Bulk Oxygen Systems at Consumer Sites*					
8. Fast-burning solids such as ordinary lumber, excelsior, or paper	50	15.2	50	15.2	50	15.2
9. Slow-burning solids such as heavy timber or coal	25	7.6	25	7.6	25	7.6
10. Open flames and welding	25	7.6	25	7.6	25	7.6
11. Air compressor intakes or inlets to ventilating or air-conditioning equipment	50	15.2	50	15.2	50	15.2
12. Places of public assembly	25	7.6	50	15.2	50	15.2
13. Public sidewalks and parked vehicles	15	4.6	15	4.6	15	4.6
14. Line of adjoining property that can be built upon	5	1.5	5	1.5	5	1.5

[a]Portions of wall less than 10 ft (3 m) (measured horizontally) from any part of a system shall have a fire resistance rating of at least $^1/_2$ hour.
[b]Exclusive of windows and doors (*see number 2 of Table 3-2.2*).
[c]Portions of walls less than 10 ft (3 m) (measured horizontally) from any part of a system shall have a fire resistance rating of at least 1 hour.
[d]But not less than one-half the height of adjacent wall of building or structure.
[e]Distances can be reduced to 15 ft (4.5 m) for Class IIIB combustible liquids.

3-2.3 Unloading connections on delivery equipment shall not be positioned closer to any of the exposures cited in Table 3-2.2 than the distances given for the storage system.

3-2.4 Hydrogen systems of less than 3500 scf (99 m³), where located inside buildings and exposed to other occupancies, shall be situated in the building so that the system will be as follows:

(a) In an adequately ventilated area as in 4-2.2
(b) 20 ft (6 m) from all classes of flammable and combustible liquids, oxidizing gases, and readily combustible materials, such as excelsior and paper
(c) 25 ft (7.6 m) from open flames, ordinary electrical equipment, or other sources of ignition
(d) 50 ft (15 m) from intakes of ventilation or air-conditioning equipment and air compressors
(e) 50 ft (15 m) from other flammable gas storage
(f) Protected against damage or injury due to falling objects or working activity in the area

3-2.5 More than one system of 3500 scf (99 m³) or less shall be permitted to be installed in the same room, provided the systems are separated by at least 50 ft (15 m) or where a masonry structure having a minimum fire resistance rating of 2 hours is located between the systems. Each such system shall meet all of the requirements of this section.

Exception: The separation distance between multiple systems of 3500 scf (99 m³) or less shall be permitted to be reduced to 25 ft (7.6 m) in buildings where the occupancy between storage areas is free of combustible materials and protected with a sprinkler system designed for Ordinary Hazard, Group 1 occupancies or Light Hazard occupancies in accordance with NFPA 13, Standard for the Installation of Sprinkler Systems.

Chapter 4 Design Considerations at Specific Locations

4-1 Outdoor Locations.

4-1.1 Where protective walls or roofs are provided, they shall be constructed of noncombustible or limited-combustible materials.

4-1.2 Electrical equipment within 15 ft (4.6 m) shall be in accordance with Article 501 of NFPA 70, *National Electrical Code®*, for Class I, Division 2 locations.

4-2 Separate Buildings.

4-2.1 Separate buildings shall be constructed of noncombustible or limited-combustible materials. Windows and doors shall be located so as to be readily accessible in case of emergency.

Exception: Window glazing shall be permitted to be plastic.

4-2.2 Ventilation to the outdoors shall be provided. Inlet openings shall be located near the floor in exterior walls only. Outlet openings shall be located at the high point of the room in exterior walls or roof. Inlet and outlet openings shall each

HAZARDOUS MATERIALS

ATTACHMENT 2

SLAB OUTPUT

SLAB Model - cmedo Calculation

Ref: SLAB Users Manual, p.46

Aqueous Ammonia 28%	Tank		Hose	
Liquid Heat Capacity (CPSL) =	4318	J/kg-K	4318	J/kg-K
Storage Temp (Tst) =	310	K	298	K
Boiling Point (Tbp) =	302.8	K	302.8	K
Heat of Vaporization at Tbp (DHE) =	1172991	J/kg	1172991	J/kg
CMEDO =	0.9735		1.0177	

Range of values is 0 to 1.
If less than 0, then use 0.
If greater than 1, then use 1.

Refs:
SLAB Users Manual, LLNL, June 1990
Perry and Chilton, 1973, Handbook of Chemistry and Physics, 1974-1975*
Reid, Prausnitz and Sherwood, 1977*
Chemical Engineering, Nov 25, 1974, pp.91-99*
Chemical Engineering, Dec 23, 1974, pp 67-73*
Ammonia Technical Data Manual, LaRoche Industries, Inc., 1997

*Aerovironment Inc., C. Botsford, W. Wert, AV-R-93-02-207, May 1993.

```
INPUT DATA FILE NAME :  C:\CALPINE\IEEC\TEMP\TANK1.SLB
OUTPUT LIST FILE NAME : C:\CALPINE\IEEC\TEMP\TANK1.LST
```

problem input

```
idspl =         1
ncalc =         1
wms   =  0.017031
cps   =   2093.65
tbp   =    239.70
cmed0 =      0.97
dhe   =  1370837.
cpsl  =   4956.39
rhosl =    639.00
spb   =   2132.50
spc   =    -32.98
ts    =    310.72
qs    =      1.12
as    =    241.92
tsd   =      600.
qtis  =      0.00
hs    =      0.00
tav   =   3600.00
xffm  =   2000.00
zp(1) =      1.50
zp(2) =      0.00
zp(3) =      0.00
zp(4) =      0.00
z0    =  0.100000
za    =     10.00
ua    =      1.50
ta    =    310.72
rh    =     50.00
stab  =      6.00
```

release gas properties

```
molecular weight of source gas (kg)          - wms  =  1.7031E-02
vapor heat capacity, const. p.  (j/kg-k)     - cps  =  2.0937E+03
temperature of source gas (k)                - ts   =  2.3970E+02
density of source gas (kg/m3)                - rhos =  8.6589E-01
boiling point temperature                    - tbp  =  2.3970E+02
liquid mass fraction                         - cmed0=  0.0000E+00
liquid heat capacity (j/kg-k)                - cpsl =  4.9564E+03
heat of vaporization (j/kg)                  - dhe  =  1.3708E+06
liquid source density (kg/m3)                - rhosl=  6.3900E+02
saturation pressure constant                 - spa  =  1.0316E+01
saturation pressure constant (k)             - spb  =  2.1325E+03
```

saturation pressure constant (k)	- spc	= -3.2980E+01

spill characteristics

spill type	- idspl=	1
mass source rate (kg/s)	- qs =	1.1200E+00
continuous source duration (s)	- tsd =	6.0000E+02
continuous source mass (kg)	- qtcs =	6.7200E+02
instantaneous source mass (kg)	- qtis =	0.0000E+00
source area (m2)	- as =	2.4192E+02
vertical vapor velocity (m/s)	- ws =	5.3467E-03
source half width (m)	- bs =	7.7769E+00
source height (m)	- hs =	0.0000E+00
horizontal vapor velocity (m/s)	- us =	0.0000E+00

field parameters

concentration averaging time (s)	- tav =	3.6000E+03
mixing layer height (m)	- hmx =	2.6000E+02
maximum downwind distrace (m)	- xffm =	2.0000E+03
concentration measurement height (m)	- zp(1)=	1.5000E+00
	- zp(2)=	0.0000E+00
	- zp(3)=	0.0000E+00
	- zp(4)=	0.0000E+00

ambient meteorological properties

molecular weight of ambient air (kg)	- wmae =	2.8580E-02
heat capacity of ambient air at const p. (j/kg-k)	- cpaa =	1.0243E+03
density of ambient air (kg/m3)	- rhoa =	1.1209E+00
ambient measurement height (m)	- za =	1.0000E+01
ambient atmospheric pressure (pa=n/m2=j/m3)	- pa =	1.0133E+05
ambient wind speed (m/s)	- ua =	1.5000E+00
ambient temperature (k)	- ta =	3.1072E+02
relative humidity (percent)	- rh =	5.0000E+01
ambient friction velocity (m/s)	- uastr =	6.1310E-02
atmospheric stability class value	- stab =	6.0000E+00
inverse monin-obukhov length (1/m)	- ala =	5.7143E-02
surface roughness height (m)	- z0 =	1.0000E-01

additional parameters

sub-step multiplier	- ncalc =	1
number of calculational sub-steps	- nssm =	3
acceleration of gravity (m/s2)	- grav =	9.8066E+00
gas constant (j/mol- k)	- rr =	8.3143E+00
von karman constant	- xk =	4.1000E-01

1

instantaneous spatially averaged cloud parameters

x	zc	h	bb	b	bbx	bx	cv	rho	t	u	ua
-7.78E+00	0.00E+00	0.00E+00	7.78E+00	7.78E+00	7.78E+00	7.78E+00	0.00E+00	1.12E+00	3.11E+02	0.00E+00	0.00E+00
-6.22E+00	0.00E+00	1.19E+00	7.84E+00	7.78E+00	8.83E+00	8.83E+00	2.89E-02	1.12E+00	3.08E+02	3.08E-01	3.30E-01
-4.67E+00	0.00E+00	1.57E+00	7.92E+00	7.78E+00	9.89E+00	9.89E+00	4.23E-02	1.11E+00	3.07E+02	3.16E-01	3.95E-01
-3.11E+00	0.00E+00	2.08E+00	8.06E+00	7.78E+00	1.10E+01	1.09E+01	5.19E-02	1.11E+00	3.06E+02	2.86E-01	4.69E-01
-1.56E+00	0.00E+00	3.17E+00	8.40E+00	7.78E+00	1.20E+01	1.20E+01	5.84E-02	1.11E+00	3.06E+02	2.13E-01	5.96E-01
6.66E-16	0.00E+00	3.20E+00	1.50E+01	7.78E+00	1.31E+01	1.31E+01	3.69E-02	1.12E+00	3.08E+02	2.35E-01	6.00E-01
1.56E+00	0.00E+00	1.31E+01	1.58E+01	7.78E+00	1.41E+01	1.41E+01	3.82E-02	1.12E+00	3.08E+02	6.33E-02	1.17E+00
3.11E+00	0.00E+00	1.33E+00	3.64E+01	7.77E+00	1.52E+01	1.52E+01	2.08E-02	1.12E+00	3.09E+02	5.78E-01	3.68E-01
4.67E+00	0.00E+00	1.71E+00	3.65E+01	7.78E+00	1.62E+01	1.62E+01	1.90E-02	1.12E+00	3.09E+02	5.62E-01	4.27E-01
6.22E+00	0.00E+00	2.00E+00	3.66E+01	7.78E+00	1.73E+01	1.73E+01	1.87E-02	1.12E+00	3.09E+02	5.49E-01	4.67E-01
7.78E+00	0.00E+00	2.25E+00	3.67E+01	7.79E+00	1.84E+01	1.84E+01	1.89E-02	1.12E+00	3.09E+02	5.34E-01	4.99E-01
7.91E+00	8.85E-04	2.30E+00	3.67E+01	7.79E+00	1.85E+01	1.85E+01	1.88E-02	1.12E+00	3.09E+02	5.26E-01	5.05E-01
8.06E+00	4.14E-03	2.31E+00	3.67E+01	7.79E+00	1.87E+01	1.87E+01	1.87E-02	1.12E+00	3.09E+02	5.27E-01	5.07E-01
8.24E+00	1.09E-02	2.33E+00	3.67E+01	7.79E+00	1.90E+01	1.90E+01	1.85E-02	1.12E+00	3.09E+02	5.28E-01	5.08E-01
8.46E+00	2.29E-02	2.34E+00	3.67E+01	7.79E+00	1.93E+01	1.93E+01	1.83E-02	1.12E+00	3.09E+02	5.30E-01	5.10E-01
8.70E+00	4.21E-02	2.36E+00	3.67E+01	7.79E+00	1.96E+01	1.96E+01	1.81E-02	1.12E+00	3.09E+02	5.32E-01	5.13E-01
8.99E+00	7.17E-02	2.38E+00	3.67E+01	7.79E+00	2.00E+01	2.00E+01	1.79E-02	1.12E+00	3.09E+02	5.34E-01	5.15E-01
9.33E+00	1.16E-01	2.41E+00	3.67E+01	7.79E+00	2.05E+01	2.05E+01	1.76E-02	1.12E+00	3.09E+02	5.37E-01	5.18E-01
9.73E+00	1.79E-01	2.44E+00	3.67E+01	7.78E+00	2.10E+01	2.10E+01	1.73E-02	1.12E+00	3.09E+02	5.40E-01	5.21E-01
1.02E+01	2.69E-01	2.47E+00	3.67E+01	7.78E+00	2.16E+01	2.16E+01	1.70E-02	1.12E+00	3.09E+02	5.43E-01	5.25E-01
1.07E+01	3.96E-01	2.50E+00	3.67E+01	7.78E+00	2.24E+01	2.24E+01	1.66E-02	1.12E+00	3.09E+02	5.47E-01	5.29E-01
1.14E+01	5.71E-01	2.54E+00	3.67E+01	7.78E+00	2.32E+01	2.32E+01	1.62E-02	1.12E+00	3.09E+02	5.51E-01	5.34E-01
1.21E+01	8.10E-01	2.59E+00	3.67E+01	7.78E+00	2.43E+01	2.43E+01	1.58E-02	1.12E+00	3.10E+02	5.55E-01	5.39E-01
1.30E+01	1.13E+00	2.64E+00	3.68E+01	7.77E+00	2.54E+01	2.54E+01	1.53E-02	1.12E+00	3.10E+02	5.61E-01	5.45E-01
1.40E+01	1.56E+00	2.66E+00	3.67E+01	7.76E+00	2.68E+01	2.68E+01	1.46E-02	1.12E+00	3.10E+02	5.87E-01	5.73E-01
1.52E+01	2.08E+00	2.62E+00	3.67E+01	7.74E+00	2.84E+01	2.84E+01	1.37E-02	1.12E+00	3.10E+02	6.36E-01	6.23E-01
1.66E+01	2.70E+00	2.55E+00	3.66E+01	7.72E+00	3.03E+01	3.03E+01	1.30E-02	1.12E+00	3.10E+02	6.89E-01	6.77E-01
1.82E+01	3.43E+00	2.48E+00	3.66E+01	7.70E+00	3.26E+01	3.26E+01	1.24E-02	1.12E+00	3.10E+02	7.45E-01	7.34E-01
2.01E+01	4.29E+00	2.40E+00	3.65E+01	7.68E+00	3.51E+01	3.51E+01	1.18E-02	1.12E+00	3.10E+02	8.05E-01	7.95E-01
2.24E+01	5.31E+00	2.32E+00	3.65E+01	7.66E+00	3.82E+01	3.82E+01	1.13E-02	1.12E+00	3.10E+02	8.69E-01	8.60E-01
2.50E+01	6.50E+00	2.25E+00	3.65E+01	7.64E+00	4.17E+01	4.17E+01	1.09E-02	1.12E+00	3.10E+02	9.37E-01	9.29E-01
2.80E+01	7.90E+00	2.18E+00	3.65E+01	7.63E+00	4.59E+01	4.59E+01	1.04E-02	1.12E+00	3.10E+02	1.01E+00	1.00E+00
3.16E+01	9.54E+00	2.12E+00	3.65E+01	7.61E+00	5.07E+01	5.07E+01	9.98E-03	1.12E+00	3.10E+02	1.08E+00	1.07E+00
3.58E+01	1.14E+01	2.07E+00	3.66E+01	7.60E+00	5.64E+01	5.64E+01	9.56E-03	1.12E+00	3.10E+02	1.16E+00	1.15E+00
4.07E+01	1.37E+01	2.02E+00	3.67E+01	7.59E+00	6.31E+01	6.31E+01	9.15E-03	1.12E+00	3.10E+02	1.23E+00	1.23E+00
4.64E+01	1.63E+01	1.98E+00	3.68E+01	7.57E+00	7.09E+01	7.09E+01	8.74E-03	1.12E+00	3.10E+02	1.31E+00	1.31E+00
5.31E+01	1.93E+01	1.95E+00	3.69E+01	7.56E+00	8.00E+01	8.00E+01	8.33E-03	1.12E+00	3.10E+02	1.39E+00	1.39E+00
6.09E+01	2.29E+01	1.93E+00	3.71E+01	7.55E+00	9.06E+01	9.06E+01	7.92E-03	1.12E+00	3.10E+02	1.48E+00	1.47E+00
7.01E+01	2.70E+01	1.91E+00	3.73E+01	7.54E+00	1.03E+02	1.03E+02	7.52E-03	1.12E+00	3.10E+02	1.56E+00	1.56E+00
8.08E+01	3.18E+01	1.90E+00	3.76E+01	7.53E+00	1.18E+02	1.18E+02	7.12E-03	1.12E+00	3.10E+02	1.64E+00	1.64E+00
9.33E+01	3.74E+01	1.90E+00	3.79E+01	7.52E+00	1.35E+02	1.35E+02	6.72E-03	1.12E+00	3.10E+02	1.73E+00	1.73E+00
1.08E+02	4.39E+01	1.91E+00	3.83E+01	7.51E+00	1.55E+02	1.55E+02	6.32E-03	1.12E+00	3.10E+02	1.81E+00	1.81E+00
1.25E+02	5.15E+01	1.92E+00	3.88E+01	7.50E+00	1.78E+02	1.78E+02	5.93E-03	1.12E+00	3.10E+02	1.90E+00	1.90E+00
1.45E+02	6.03E+01	1.94E+00	3.93E+01	7.50E+00	2.05E+02	2.05E+02	5.54E-03	1.12E+00	3.10E+02	1.98E+00	1.98E+00
1.69E+02	7.05E+01	1.96E+00	4.00E+01	7.49E+00	2.37E+02	2.37E+02	5.17E-03	1.12E+00	3.10E+02	2.06E+00	2.06E+00
1.96E+02	8.24E+01	2.00E+00	4.08E+01	7.48E+00	2.75E+02	2.75E+02	4.80E-03	1.12E+00	3.10E+02	2.14E+00	2.14E+00
2.28E+02	9.62E+01	2.03E+00	4.17E+01	7.48E+00	3.18E+02	3.18E+02	4.45E-03	1.12E+00	3.10E+02	2.22E+00	2.22E+00

2.66E+02	1.12E+02	2.07E+00	4.28E+01	7.48E+00	3.70E+02	3.70E+02	4.11E-03	1.12E+00	3.10E+02	2.30E+00	2.30E+00
3.10E+02	1.31E+02	2.11E+00	4.41E+01	7.48E+00	4.29E+02	4.29E+02	3.80E-03	1.12E+00	3.10E+02	2.37E+00	2.37E+00
3.62E+02	1.53E+02	2.15E+00	4.56E+01	7.48E+00	5.00E+02	4.99E+02	3.50E-03	1.12E+00	3.10E+02	2.44E+00	2.45E+00
4.22E+02	1.78E+02	2.18E+00	4.73E+01	7.48E+00	5.82E+02	5.81E+02	3.24E-03	1.12E+00	3.10E+02	2.51E+00	2.51E+00
4.92E+02	2.08E+02	2.20E+00	4.93E+01	7.48E+00	6.77E+02	6.77E+02	3.00E-03	1.12E+00	3.10E+02	2.57E+00	2.58E+00
5.75E+02	2.44E+02	2.19E+00	5.16E+01	7.48E+00	7.90E+02	7.90E+02	2.82E-03	1.12E+00	3.11E+02	2.63E+00	2.63E+00
6.72E+02	2.59E+02	2.20E+00	5.43E+01	7.48E+00	7.90E+02	7.90E+02	2.67E-03	1.12E+00	3.11E+02	2.65E+00	2.65E+00
7.86E+02	2.59E+02	2.20E+00	5.74E+01	7.48E+00	7.91E+02	7.90E+02	2.52E-03	1.12E+00	3.11E+02	2.65E+00	2.65E+00
9.19E+02	2.59E+02	2.20E+00	6.11E+01	7.48E+00	7.92E+02	7.90E+02	2.36E-03	1.12E+00	3.11E+02	2.65E+00	2.65E+00
1.07E+03	2.59E+02	2.20E+00	6.52E+01	7.48E+00	7.93E+02	7.90E+02	2.21E-03	1.12E+00	3.11E+02	2.65E+00	2.65E+00
1.26E+03	2.59E+02	2.20E+00	7.00E+01	7.48E+00	7.94E+02	7.90E+02	2.05E-03	1.12E+00	3.11E+02	2.65E+00	2.65E+00
1.47E+03	2.59E+02	2.21E+00	7.55E+01	7.48E+00	7.96E+02	7.90E+02	1.90E-03	1.12E+00	3.11E+02	2.65E+00	2.65E+00
1.72E+03	2.59E+02	2.21E+00	8.17E+01	7.48E+00	7.97E+02	7.90E+02	1.74E-03	1.12E+00	3.11E+02	2.65E+00	2.65E+00
2.01E+03	2.59E+02	2.22E+00	8.89E+01	7.48E+00	7.99E+02	7.90E+02	1.60E-03	1.12E+00	3.11E+02	2.65E+00	2.65E+00

1

x	cm	cmv	cmda	cmw	cmwv	wc	vg	ug	w	v	vx
-7.78E+00	0.00E+00	0.00E+00	9.78E-01	2.19E-02	2.19E-02	0.00E+00	0.00E+00	0.00E+00	9.92E-01	3.12E-02	0.00E+00
-6.22E+00	1.74E-02	1.74E-02	9.61E-01	2.15E-02	2.15E-02	0.00E+00	0.00E+00	0.00E+00	5.22E-02	6.83E-03	9.85E-02
-4.67E+00	2.56E-02	2.56E-02	9.53E-01	2.14E-02	2.14E-02	0.00E+00	0.00E+00	0.00E+00	4.05E-02	1.05E-02	1.12E-01
-3.11E+00	3.16E-02	3.16E-02	9.47E-01	2.12E-02	2.12E-02	0.00E+00	0.00E+00	0.00E+00	3.05E-02	1.86E-02	1.28E-01
-1.56E+00	3.56E-02	3.56E-02	9.43E-01	2.11E-02	2.11E-02	0.00E+00	0.00E+00	0.00E+00	2.66E-02	3.56E-02	1.56E-01
6.66E-16	2.23E-02	2.23E-02	9.56E-01	2.14E-02	2.14E-02	0.00E+00	0.00E+00	0.00E+00	2.27E-02	3.39E-02	1.57E-01
1.56E+00	2.31E-02	2.31E-02	9.55E-01	2.14E-02	2.14E-02	0.00E+00	0.00E+00	0.00E+00	4.36E-02	9.93E-02	2.70E-01
3.11E+00	1.25E-02	1.25E-02	9.66E-01	2.16E-02	2.16E-02	0.00E+00	0.00E+00	0.00E+00	9.10E-02	1.94E-02	1.04E-01
4.67E+00	1.14E-02	1.14E-02	9.67E-01	2.17E-02	2.17E-02	0.00E+00	0.00E+00	0.00E+00	5.84E-02	1.39E-02	1.17E-01
6.22E+00	1.12E-02	1.12E-02	9.67E-01	2.17E-02	2.17E-02	0.00E+00	0.00E+00	0.00E+00	4.40E-02	1.08E-02	1.26E-01
7.78E+00	1.14E-02	1.14E-02	9.67E-01	2.17E-02	2.17E-02	0.00E+00	0.00E+00	0.00E+00	3.52E-02	9.16E-03	1.33E-01
7.91E+00	1.13E-02	1.13E-02	9.67E-01	2.17E-02	2.17E-02	7.03E-03	0.00E+00	0.00E+00	3.45E-02	8.91E-03	1.35E-01
8.06E+00	1.12E-02	1.12E-02	9.67E-01	2.17E-02	2.17E-02	1.51E-02	0.00E+00	0.00E+00	3.42E-02	8.93E-03	1.35E-01
8.24E+00	1.11E-02	1.11E-02	9.67E-01	2.17E-02	2.17E-02	2.45E-02	0.00E+00	0.00E+00	3.39E-02	8.96E-03	1.36E-01
8.46E+00	1.10E-02	1.10E-02	9.67E-01	2.17E-02	2.17E-02	3.51E-02	0.00E+00	0.00E+00	3.35E-02	8.99E-03	1.37E-01
8.70E+00	1.09E-02	1.09E-02	9.67E-01	2.17E-02	2.17E-02	4.74E-02	0.00E+00	0.00E+00	3.31E-02	9.02E-03	1.39E-01
8.99E+00	1.07E-02	1.07E-02	9.68E-01	2.17E-02	2.17E-02	6.13E-02	0.00E+00	0.00E+00	3.25E-02	9.06E-03	1.42E-01
9.33E+00	1.06E-02	1.06E-02	9.68E-01	2.17E-02	2.17E-02	7.72E-02	0.00E+00	0.00E+00	3.20E-02	9.10E-03	1.45E-01
9.73E+00	1.04E-02	1.04E-02	9.68E-01	2.17E-02	2.17E-02	9.51E-02	0.00E+00	0.00E+00	3.13E-02	9.15E-03	1.49E-01
1.02E+01	1.02E-02	1.02E-02	9.68E-01	2.17E-02	2.17E-02	1.15E-01	0.00E+00	0.00E+00	3.06E-02	9.21E-03	1.55E-01
1.07E+01	9.97E-03	9.97E-03	9.68E-01	2.17E-02	2.17E-02	1.38E-01	0.00E+00	0.00E+00	2.99E-02	9.27E-03	1.63E-01
1.14E+01	9.73E-03	9.73E-03	9.69E-01	2.17E-02	2.17E-02	1.64E-01	0.00E+00	0.00E+00	2.91E-02	9.34E-03	1.72E-01
1.21E+01	9.48E-03	9.48E-03	9.69E-01	2.17E-02	2.17E-02	1.92E-01	0.00E+00	0.00E+00	2.84E-02	9.42E-03	1.84E-01
1.30E+01	9.20E-03	9.20E-03	9.69E-01	2.17E-02	2.17E-02	2.23E-01	0.00E+00	0.00E+00	2.76E-02	9.51E-03	1.97E-01
1.40E+01	8.74E-03	8.74E-03	9.70E-01	2.17E-02	2.17E-02	2.53E-01	0.00E+00	0.00E+00	5.49E-02	9.97E-03	2.15E-01
1.52E+01	8.21E-03	8.21E-03	9.70E-01	2.17E-02	2.17E-02	2.79E-01	0.00E+00	0.00E+00	4.18E-02	1.08E-02	2.35E-01
1.66E+01	7.78E-03	7.78E-03	9.70E-01	2.18E-02	2.18E-02	3.07E-01	0.00E+00	0.00E+00	3.32E-02	1.17E-02	2.53E-01
1.82E+01	7.42E-03	7.42E-03	9.71E-01	2.18E-02	2.18E-02	3.36E-01	0.00E+00	0.00E+00	2.73E-02	1.27E-02	2.70E-01
2.01E+01	7.09E-03	7.09E-03	9.71E-01	2.18E-02	2.18E-02	3.66E-01	0.00E+00	0.00E+00	2.30E-02	1.38E-02	2.85E-01
2.24E+01	6.79E-03	6.79E-03	9.71E-01	2.18E-02	2.18E-02	3.97E-01	0.00E+00	0.00E+00	1.98E-02	1.49E-02	2.99E-01
2.50E+01	6.50E-03	6.50E-03	9.72E-01	2.18E-02	2.18E-02	4.29E-01	0.00E+00	0.00E+00	1.73E-02	1.61E-02	3.11E-01
2.80E+01	6.23E-03	6.23E-03	9.72E-01	2.18E-02	2.18E-02	4.62E-01	0.00E+00	0.00E+00	1.53E-02	1.73E-02	3.21E-01
3.16E+01	5.97E-03	5.97E-03	9.72E-01	2.18E-02	2.18E-02	4.95E-01	0.00E+00	0.00E+00	1.36E-02	1.86E-02	3.29E-01
3.58E+01	5.72E-03	5.72E-03	9.72E-01	2.18E-02	2.18E-02	5.29E-01	0.00E+00	0.00E+00	1.23E-02	1.99E-02	3.35E-01
4.07E+01	5.47E-03	5.47E-03	9.73E-01	2.18E-02	2.18E-02	5.63E-01	0.00E+00	0.00E+00	1.11E-02	2.12E-02	3.40E-01

4.64E+01	5.22E-03	5.22E-03	9.73E-01	2.18E-02	2.18E-02	5.98E-01	0.00E+00	0.00E+00	1.02E-02	2.26E-02	3.43E-01
5.31E+01	4.98E-03	4.98E-03	9.73E-01	2.18E-02	2.18E-02	6.33E-01	0.00E+00	0.00E+00	9.35E-03	2.40E-02	3.45E-01
6.09E+01	4.74E-03	4.74E-03	9.73E-01	2.18E-02	2.18E-02	6.67E-01	0.00E+00	0.00E+00	8.61E-03	2.54E-02	3.45E-01
7.01E+01	4.49E-03	4.49E-03	9.74E-01	2.18E-02	2.18E-02	7.02E-01	0.00E+00	0.00E+00	7.96E-03	2.68E-02	3.43E-01
8.08E+01	4.25E-03	4.25E-03	9.74E-01	2.18E-02	2.18E-02	7.36E-01	0.00E+00	0.00E+00	7.37E-03	2.83E-02	3.40E-01
9.33E+01	4.01E-03	4.01E-03	9.74E-01	2.18E-02	2.18E-02	7.70E-01	0.00E+00	0.00E+00	6.83E-03	2.97E-02	3.34E-01
1.08E+02	3.78E-03	3.78E-03	9.74E-01	2.18E-02	2.18E-02	8.02E-01	0.00E+00	0.00E+00	6.32E-03	3.11E-02	3.27E-01
1.25E+02	3.54E-03	3.54E-03	9.75E-01	2.18E-02	2.18E-02	8.34E-01	0.00E+00	0.00E+00	5.84E-03	3.25E-02	3.18E-01
1.45E+02	3.31E-03	3.31E-03	9.75E-01	2.18E-02	2.18E-02	8.65E-01	0.00E+00	0.00E+00	5.37E-03	3.38E-02	3.06E-01
1.69E+02	3.09E-03	3.09E-03	9.75E-01	2.19E-02	2.19E-02	8.94E-01	0.00E+00	0.00E+00	4.92E-03	3.51E-02	2.92E-01
1.96E+02	2.87E-03	2.87E-03	9.75E-01	2.19E-02	2.19E-02	9.22E-01	0.00E+00	0.00E+00	4.46E-03	3.64E-02	2.74E-01
2.28E+02	2.66E-03	2.66E-03	9.75E-01	2.19E-02	2.19E-02	9.49E-01	0.00E+00	0.00E+00	3.99E-03	3.76E-02	2.54E-01
2.66E+02	2.45E-03	2.45E-03	9.76E-01	2.19E-02	2.19E-02	9.76E-01	0.00E+00	0.00E+00	3.51E-03	3.87E-02	2.30E-01
3.10E+02	2.27E-03	2.27E-03	9.76E-01	2.19E-02	2.19E-02	1.00E+00	0.00E+00	0.00E+00	3.00E-03	3.97E-02	2.01E-01
3.62E+02	2.09E-03	2.09E-03	9.76E-01	2.19E-02	2.19E-02	1.03E+00	0.00E+00	0.00E+00	2.45E-03	4.06E-02	1.68E-01
4.22E+02	1.93E-03	1.93E-03	9.76E-01	2.19E-02	2.19E-02	1.06E+00	0.00E+00	0.00E+00	1.84E-03	4.14E-02	1.28E-01
4.92E+02	1.79E-03	1.79E-03	9.76E-01	2.19E-02	2.19E-02	1.10E+00	0.00E+00	0.00E+00	1.15E-03	4.21E-02	8.13E-02
5.75E+02	1.68E-03	1.68E-03	9.76E-01	2.19E-02	2.19E-02	1.15E+00	0.00E+00	0.00E+00	3.61E-04	4.26E-02	2.53E-02
6.72E+02	1.59E-03	1.59E-03	9.77E-01	2.19E-02	2.19E-02	1.22E+00	0.00E+00	0.00E+00	2.42E-05	4.24E-02	1.03E-02
7.86E+02	1.50E-03	1.50E-03	9.77E-01	2.19E-02	2.19E-02	1.30E+00	0.00E+00	0.00E+00	2.43E-05	4.18E-02	1.03E-02
9.19E+02	1.41E-03	1.41E-03	9.77E-01	2.19E-02	2.19E-02	1.37E+00	0.00E+00	0.00E+00	2.43E-05	4.12E-02	1.03E-02
1.07E+03	1.32E-03	1.32E-03	9.77E-01	2.19E-02	2.19E-02	1.44E+00	0.00E+00	0.00E+00	2.43E-05	4.05E-02	1.03E-02
1.26E+03	1.22E-03	1.22E-03	9.77E-01	2.19E-02	2.19E-02	1.51E+00	0.00E+00	0.00E+00	2.43E-05	3.97E-02	1.03E-02
1.47E+03	1.13E-03	1.13E-03	9.77E-01	2.19E-02	2.19E-02	1.58E+00	0.00E+00	0.00E+00	2.44E-05	3.89E-02	1.03E-02
1.72E+03	1.04E-03	1.04E-03	9.77E-01	2.19E-02	2.19E-02	1.64E+00	0.00E+00	0.00E+00	2.44E-05	3.80E-02	1.02E-02
2.01E+03	9.52E-04	9.52E-04	9.77E-01	2.19E-02	2.19E-02	1.70E+00	0.00E+00	0.00E+00	2.45E-05	3.70E-02	1.02E-02

1

time averaged (tav = 3600. s) volume concentration: concentration contour parameters

c(x,y,z,t) = cc(x) * (erf(xa)-erf(xb)) * (erf(ya)-erf(yb)) * (exp(-za*za)+exp(-zb*zb))

```
c(x,y,z,t) = concentration (volume fraction) at (x,y,z,t)
         x = downwind distance (m)
         y = crosswind horizontal distance (m)
         z = height (m)
         t = time (s)

       erf = error functon
        xa = (x-xc+bx)/(sr2*betax)
        xb = (x-xc-bx)/(sr2*betax)
        ya = (y+b)/(sr2*betac)
        yb = (y-b)/(sr2*betac)
       exp = exponential function
        za = (z-zc)/(sr2*sig)
        zb = (z+zc)/(sr2*sig)
       sr2 = sqrt(2.0)
```

x	cc(x)	b(x)	betac(x)	zc(x)	sig(x)
-7.78E+00	0.00E+00	7.78E+00	6.35E-02	0.00E+00	0.00E+00
-6.22E+00	5.04E-03	7.78E+00	5.87E-01	0.00E+00	6.87E-01
-4.67E+00	7.44E-03	7.78E+00	8.73E-01	0.00E+00	9.05E-01

t	xc(t)	bx(t)	betax(t)
3.29E+01	0.00E+00	7.78E+00	6.35E-02
3.78E+01	7.78E-01	8.83E+00	7.21E-02
4.27E+01	1.56E+00	9.89E+00	8.08E-02

-3.11E+00	9.29E-03	7.78E+00	1.24E+00	0.00E+00	1.20E+00
-1.56E+00	1.09E-02	7.78E+00	1.84E+00	0.00E+00	1.83E+00
6.66E-16	1.23E-02	7.78E+00	7.40E+00	0.00E+00	1.85E+00
1.56E+00	1.34E-02	7.78E+00	7.93E+00	0.00E+00	7.55E+00
3.11E+00	1.69E-02	7.77E+00	2.05E+01	0.00E+00	7.69E-01
4.67E+00	1.54E-02	7.78E+00	2.06E+01	0.00E+00	9.89E-01
6.22E+00	1.52E-02	7.78E+00	2.06E+01	0.00E+00	1.15E+00
7.78E+00	1.54E-02	7.79E+00	2.07E+01	0.00E+00	1.30E+00
7.91E+00	1.53E-02	7.79E+00	2.07E+01	8.85E-04	1.33E+00
8.06E+00	1.52E-02	7.79E+00	2.07E+01	4.14E-03	1.33E+00
8.24E+00	1.51E-02	7.79E+00	2.07E+01	1.09E-02	1.34E+00
8.46E+00	1.51E-02	7.79E+00	2.07E+01	2.29E-02	1.34E+00
8.70E+00	1.50E-02	7.79E+00	2.07E+01	4.21E-02	1.34E+00
8.99E+00	1.50E-02	7.79E+00	2.07E+01	7.17E-02	1.33E+00
9.33E+00	1.51E-02	7.79E+00	2.07E+01	1.16E-01	1.32E+00
9.73E+00	1.52E-02	7.78E+00	2.07E+01	1.79E-01	1.30E+00
1.02E+01	1.55E-02	7.78E+00	2.07E+01	2.69E-01	1.27E+00
1.07E+01	1.61E-02	7.78E+00	2.07E+01	3.96E-01	1.22E+00
1.14E+01	1.71E-02	7.78E+00	2.07E+01	5.71E-01	1.14E+00
1.21E+01	1.88E-02	7.78E+00	2.07E+01	8.10E-01	1.03E+00
1.30E+01	2.20E-02	7.77E+00	2.08E+01	1.13E+00	8.71E-01
1.40E+01	2.38E-02	7.76E+00	2.07E+01	1.56E+00	7.68E-01
1.52E+01	2.24E-02	7.74E+00	2.07E+01	2.08E+00	7.55E-01
1.66E+01	2.13E-02	7.72E+00	2.07E+01	2.70E+00	7.37E-01
1.82E+01	2.03E-02	7.70E+00	2.07E+01	3.43E+00	7.15E-01
2.01E+01	1.95E-02	7.68E+00	2.06E+01	4.29E+00	6.93E-01
2.24E+01	1.87E-02	7.66E+00	2.06E+01	5.31E+00	6.71E-01
2.50E+01	1.80E-02	7.64E+00	2.06E+01	6.50E+00	6.50E-01
2.80E+01	1.73E-02	7.63E+00	2.07E+01	7.90E+00	6.30E-01
3.16E+01	1.66E-02	7.61E+00	2.07E+01	9.54E+00	6.12E-01
3.58E+01	1.60E-02	7.60E+00	2.07E+01	1.14E+01	5.97E-01
4.07E+01	1.54E-02	7.59E+00	2.08E+01	1.37E+01	5.83E-01
4.64E+01	1.47E-02	7.57E+00	2.09E+01	1.63E+01	5.72E-01
5.31E+01	1.42E-02	7.56E+00	2.10E+01	1.93E+01	5.63E-01
6.09E+01	1.36E-02	7.55E+00	2.12E+01	2.29E+01	5.56E-01
7.01E+01	1.30E-02	7.54E+00	2.14E+01	2.70E+01	5.51E-01
8.08E+01	1.25E-02	7.53E+00	2.16E+01	3.18E+01	5.49E-01
9.33E+01	1.19E-02	7.52E+00	2.19E+01	3.74E+01	5.48E-01
1.08E+02	1.14E-02	7.51E+00	2.22E+01	4.39E+01	5.50E-01
1.25E+02	1.09E-02	7.50E+00	2.27E+01	5.15E+01	5.54E-01
1.45E+02	1.04E-02	7.50E+00	2.32E+01	6.03E+01	5.59E-01
1.69E+02	1.00E-02	7.49E+00	2.38E+01	7.05E+01	5.67E-01
1.96E+02	9.61E-03	7.48E+00	2.46E+01	8.24E+01	5.76E-01
2.28E+02	9.25E-03	7.48E+00	2.56E+01	9.62E+01	5.86E-01
2.66E+02	8.94E-03	7.48E+00	2.68E+01	1.12E+02	5.97E-01
3.10E+02	8.69E-03	7.48E+00	2.83E+01	1.31E+02	6.09E-01
3.62E+02	8.50E-03	7.48E+00	3.00E+01	1.53E+02	6.20E-01
4.22E+02	8.40E-03	7.48E+00	3.21E+01	1.78E+02	6.29E-01
4.92E+02	8.39E-03	7.48E+00	3.46E+01	2.08E+02	6.34E-01
5.75E+02	8.54E-03	7.48E+00	3.76E+01	2.44E+02	6.32E-01
6.72E+02	8.85E-03	7.48E+00	4.12E+01	2.59E+02	6.34E-01
7.86E+02	9.20E-03	7.48E+00	4.54E+01	2.59E+02	6.34E-01

4.85E+01	2.33E+00	1.09E+01	8.94E-02
5.44E+01	3.11E+00	1.20E+01	9.80E-02
5.65E+01	3.89E+00	1.31E+01	1.07E-01
5.85E+01	4.67E+00	1.41E+01	1.15E-01
6.09E+01	5.44E+00	1.52E+01	1.24E-01
6.33E+01	6.22E+00	1.62E+01	1.33E-01
6.61E+01	7.00E+00	1.73E+01	1.41E-01
6.88E+01	7.78E+00	1.84E+01	1.50E-01
6.93E+01	7.91E+00	1.85E+01	1.51E-01
6.99E+01	8.06E+00	1.87E+01	1.53E-01
7.06E+01	8.24E+00	1.90E+01	1.55E-01
7.14E+01	8.46E+00	1.93E+01	1.57E-01
7.23E+01	8.70E+00	1.96E+01	1.60E-01
7.34E+01	8.99E+00	2.00E+01	1.63E-01
7.47E+01	9.33E+00	2.05E+01	1.67E-01
7.61E+01	9.73E+00	2.10E+01	1.72E-01
7.79E+01	1.02E+01	2.16E+01	1.77E-01
7.99E+01	1.07E+01	2.24E+01	1.83E-01
8.22E+01	1.14E+01	2.32E+01	1.90E-01
8.49E+01	1.21E+01	2.43E+01	1.98E-01
8.80E+01	1.30E+01	2.54E+01	2.08E-01
9.15E+01	1.40E+01	2.68E+01	2.19E-01
9.54E+01	1.52E+01	2.84E+01	2.32E-01
9.96E+01	1.66E+01	3.03E+01	2.48E-01
1.04E+02	1.82E+01	3.26E+01	2.66E-01
1.09E+02	2.01E+01	3.51E+01	2.87E-01
1.14E+02	2.24E+01	3.82E+01	3.12E-01
1.20E+02	2.50E+01	4.17E+01	3.41E-01
1.26E+02	2.80E+01	4.59E+01	3.75E-01
1.33E+02	3.16E+01	5.07E+01	4.14E-01
1.41E+02	3.58E+01	5.64E+01	4.61E-01
1.49E+02	4.07E+01	6.31E+01	5.15E-01
1.58E+02	4.64E+01	7.09E+01	5.79E-01
1.68E+02	5.31E+01	8.00E+01	6.53E-01
1.79E+02	6.09E+01	9.06E+01	7.40E-01
1.91E+02	7.01E+01	1.03E+02	8.42E-01
2.04E+02	8.08E+01	1.18E+02	9.61E-01
2.19E+02	9.33E+01	1.35E+02	1.10E+00
2.36E+02	1.08E+02	1.55E+02	1.26E+00
2.54E+02	1.25E+02	1.78E+02	1.45E+00
2.75E+02	1.45E+02	2.05E+02	1.68E+00
2.98E+02	1.69E+02	2.37E+02	1.94E+00
3.24E+02	1.96E+02	2.75E+02	2.24E+00
3.54E+02	2.28E+02	3.18E+02	2.60E+00
3.87E+02	2.66E+02	3.70E+02	3.02E+00
4.24E+02	3.10E+02	4.29E+02	3.51E+00
4.67E+02	3.62E+02	4.99E+02	4.08E+00
5.16E+02	4.22E+02	5.81E+02	4.75E+00
5.71E+02	4.92E+02	6.77E+02	5.53E+00
6.35E+02	5.75E+02	7.90E+02	6.45E+00
6.37E+02	6.72E+02	7.90E+02	2.17E+01
6.80E+02	7.86E+02	7.90E+02	2.96E+01

9.19E+02	9.58E-03	7.48E+00	5.03E+01	2.59E+02	6.35E-01	7.30E+02	9.19E+02	7.90E+02	3.67E+01
1.07E+03	9.97E-03	7.48E+00	5.60E+01	2.59E+02	6.36E-01	7.88E+02	1.07E+03	7.90E+02	4.36E+01
1.26E+03	1.04E-02	7.48E+00	6.27E+01	2.59E+02	6.36E-01	8.57E+02	1.26E+03	7.90E+02	5.05E+01
1.47E+03	1.08E-02	7.48E+00	7.03E+01	2.59E+02	6.37E-01	9.37E+02	1.47E+03	7.90E+02	5.75E+01
1.72E+03	1.12E-02	7.48E+00	7.91E+01	2.59E+02	6.39E-01	1.03E+03	1.72E+03	7.90E+02	6.47E+01
2.01E+03	1.15E-02	7.48E+00	8.91E+01	2.59E+02	6.40E-01	1.14E+03	2.01E+03	7.90E+02	7.23E+01

1

time averaged (tav = 3600. s) volume concentration: concentration in the z = 1.50 plane.

downwind distance x (m)	time of max conc (s)	cloud duration (s)	effective half width bbc (m)	average concentration (volume fraction) at (x,y,z) y/bbc= 0.0	y/bbc= 0.5	y/bbc= 1.0	y/bbc= 1.5	y/bbc= 2.0	y/bbc= 2.5
-7.78E+00	3.04E+02	6.00E+02	7.78E+00	0.00E+00	0.00E+00	0.00E+00	0.00E+00	0.00E+00	0.00E+00
-6.22E+00	3.03E+02	6.00E+02	7.84E+00	6.17E-04	6.17E-04	2.81E-04	3.25E-15	0.00E+00	0.00E+00
-4.67E+00	3.02E+02	6.00E+02	7.92E+00	2.51E-03	2.51E-03	1.09E-03	3.17E-09	0.00E+00	0.00E+00
-3.11E+00	3.02E+02	6.00E+02	8.07E+00	5.66E-03	5.65E-03	2.30E-03	1.35E-06	4.07E-14	0.00E+00
-1.56E+00	3.01E+02	6.00E+02	8.41E+00	1.04E-02	1.01E-02	3.80E-03	4.51E-05	4.82E-09	3.41E-15
6.66E-16	3.00E+02	6.00E+02	1.50E+01	8.32E-03	5.83E-03	1.93E-03	2.75E-04	1.58E-05	3.51E-07
1.56E+00	3.01E+02	6.00E+02	1.58E+01	1.18E-02	8.22E-03	2.71E-03	3.92E-04	2.36E-05	5.64E-07
3.11E+00	3.02E+02	6.00E+02	3.64E+01	9.90E-04	6.81E-04	2.21E-04	3.39E-05	2.44E-06	8.21E-08
4.67E+00	3.02E+02	6.00E+02	3.65E+01	1.91E-03	1.32E-03	4.28E-04	6.55E-05	4.71E-06	1.59E-07
6.22E+00	3.03E+02	6.00E+02	3.66E+01	2.56E-03	1.76E-03	5.71E-04	8.74E-05	6.29E-06	2.12E-07
7.78E+00	3.04E+02	6.00E+02	3.67E+01	3.09E-03	2.13E-03	6.90E-04	1.06E-04	7.61E-06	2.56E-07
7.91E+00	3.04E+02	6.00E+02	3.67E+01	3.16E-03	2.17E-03	7.06E-04	1.08E-04	7.78E-06	2.62E-07
8.06E+00	3.04E+02	6.00E+02	3.67E+01	3.16E-03	2.17E-03	7.05E-04	1.08E-04	7.77E-06	2.62E-07
8.24E+00	3.04E+02	6.00E+02	3.67E+01	3.15E-03	2.17E-03	7.04E-04	1.08E-04	7.76E-06	2.61E-07
8.46E+00	3.04E+02	6.00E+02	3.67E+01	3.14E-03	2.16E-03	7.02E-04	1.07E-04	7.73E-06	2.61E-07
8.70E+00	3.05E+02	6.00E+02	3.67E+01	3.13E-03	2.15E-03	6.99E-04	1.07E-04	7.71E-06	2.60E-07
8.99E+00	3.05E+02	6.00E+02	3.67E+01	3.12E-03	2.14E-03	6.96E-04	1.07E-04	7.67E-06	2.58E-07
9.33E+00	3.05E+02	6.00E+02	3.67E+01	3.10E-03	2.13E-03	6.91E-04	1.06E-04	7.62E-06	2.57E-07
9.73E+00	3.05E+02	6.00E+02	3.67E+01	3.07E-03	2.11E-03	6.86E-04	1.05E-04	7.56E-06	2.55E-07
1.02E+01	3.05E+02	6.00E+02	3.67E+01	3.04E-03	2.09E-03	6.79E-04	1.04E-04	7.48E-06	2.52E-07
1.07E+01	3.06E+02	6.00E+02	3.67E+01	3.01E-03	2.07E-03	6.73E-04	1.03E-04	7.41E-06	2.50E-07
1.14E+01	3.06E+02	6.00E+02	3.68E+01	3.02E-03	2.08E-03	6.75E-04	1.03E-04	7.44E-06	2.51E-07
1.21E+01	3.06E+02	6.00E+02	3.68E+01	3.21E-03	2.21E-03	7.17E-04	1.10E-04	7.90E-06	2.66E-07
1.30E+01	3.07E+02	6.00E+02	3.68E+01	3.96E-03	2.72E-03	8.83E-04	1.35E-04	9.74E-06	3.28E-07
1.40E+01	3.07E+02	6.00E+02	3.68E+01	4.62E-03	3.18E-03	1.03E-03	1.58E-04	1.14E-05	3.83E-07
1.52E+01	3.08E+02	6.00E+02	3.67E+01	3.24E-03	2.23E-03	7.25E-04	1.11E-04	7.99E-06	2.69E-07
1.66E+01	3.09E+02	6.00E+02	3.66E+01	1.11E-03	7.61E-04	2.47E-04	3.79E-05	2.73E-06	9.19E-08
1.82E+01	3.10E+02	6.00E+02	3.66E+01	1.05E-04	7.23E-05	2.35E-05	3.60E-06	2.59E-07	8.72E-09
2.01E+01	3.11E+02	6.00E+02	3.66E+01	1.15E-06	7.89E-07	2.56E-07	3.92E-08	2.82E-09	9.52E-11
2.24E+01	3.12E+02	6.00E+02	3.66E+01	3.72E-10	2.56E-10	8.32E-11	1.27E-11	9.17E-13	3.09E-14
2.50E+01	3.13E+02	6.00E+02	3.66E+01	4.83E-16	3.32E-16	1.08E-16	1.65E-17	1.19E-18	4.01E-20
2.80E+01	3.15E+02	6.00E+02	3.66E+01	1.36E-25	9.36E-26	3.04E-26	4.65E-27	3.35E-28	1.13E-29
3.16E+01	3.16E+02	6.00E+02	3.67E+01	1.32E-40	9.10E-41	2.95E-41	4.52E-42	3.26E-43	1.10E-44
3.58E+01	3.19E+02	6.00E+02	3.67E+01	1.37E-63	9.45E-64	3.07E-64	4.70E-65	3.38E-66	1.14E-67
4.07E+01	3.21E+02	6.00E+02	3.68E+01	5.51E-98	3.79E-98	1.23E-98	1.88E-99	1.36-100	4.58-102
4.64E+01	3.24E+02	6.00E+02	3.70E+01	1.93-148	1.33-148	4.31-149	6.61-150	4.76-151	1.61-152
5.31E+01	3.28E+02	6.00E+02	3.72E+01	3.97-221	2.73-221	8.87-222	1.36-222	9.79-224	3.31-225
6.09E+01	3.32E+02	6.00E+02	3.74E+01	4.94-324	4.94-324	0.00E+00	0.00E+00	0.00E+00	0.00E+00

7.01E+01	3.37E+02	6.00E+02	3.78E+01	0.00E+00	0.00E+00	0.00E+00	0.00E+00	0.00E+00	0.00E+00
8.08E+01	3.42E+02	6.00E+02	3.81E+01	0.00E+00	0.00E+00	0.00E+00	0.00E+00	0.00E+00	0.00E+00
9.33E+01	3.49E+02	6.00E+02	3.86E+01	0.00E+00	0.00E+00	0.00E+00	0.00E+00	0.00E+00	0.00E+00
1.08E+02	3.56E+02	6.00E+02	3.92E+01	0.00E+00	0.00E+00	0.00E+00	0.00E+00	0.00E+00	0.00E+00
1.25E+02	3.65E+02	6.00E+02	4.00E+01	0.00E+00	0.00E+00	0.00E+00	0.00E+00	0.00E+00	0.00E+00
1.45E+02	3.76E+02	6.00E+02	4.09E+01	0.00E+00	0.00E+00	0.00E+00	0.00E+00	0.00E+00	0.00E+00
1.69E+02	3.88E+02	6.00E+02	4.20E+01	0.00E+00	0.00E+00	0.00E+00	0.00E+00	0.00E+00	0.00E+00
1.96E+02	4.02E+02	6.00E+02	4.33E+01	0.00E+00	0.00E+00	0.00E+00	0.00E+00	0.00E+00	0.00E+00
2.28E+02	4.19E+02	6.00E+02	4.50E+01	0.00E+00	0.00E+00	0.00E+00	0.00E+00	0.00E+00	0.00E+00
2.66E+02	4.39E+02	6.00E+02	4.70E+01	0.00E+00	0.00E+00	0.00E+00	0.00E+00	0.00E+00	0.00E+00
3.10E+02	4.62E+02	6.00E+02	4.95E+01	0.00E+00	0.00E+00	0.00E+00	0.00E+00	0.00E+00	0.00E+00
3.62E+02	4.89E+02	6.00E+02	5.25E+01	0.00E+00	0.00E+00	0.00E+00	0.00E+00	0.00E+00	0.00E+00
4.22E+02	5.20E+02	6.00E+02	5.61E+01	0.00E+00	0.00E+00	0.00E+00	0.00E+00	0.00E+00	0.00E+00
4.92E+02	5.57E+02	6.00E+02	6.05E+01	0.00E+00	0.00E+00	0.00E+00	0.00E+00	0.00E+00	0.00E+00
5.75E+02	6.00E+02	6.00E+02	6.56E+01	0.00E+00	0.00E+00	0.00E+00	0.00E+00	0.00E+00	0.00E+00
6.72E+02	6.37E+02	6.00E+02	7.17E+01	0.00E+00	0.00E+00	0.00E+00	0.00E+00	0.00E+00	0.00E+00
7.86E+02	6.80E+02	6.00E+02	7.90E+01	0.00E+00	0.00E+00	0.00E+00	0.00E+00	0.00E+00	0.00E+00
9.19E+02	7.30E+02	6.00E+02	8.74E+01	0.00E+00	0.00E+00	0.00E+00	0.00E+00	0.00E+00	0.00E+00
1.07E+03	7.88E+02	6.00E+02	9.73E+01	0.00E+00	0.00E+00	0.00E+00	0.00E+00	0.00E+00	0.00E+00
1.26E+03	8.57E+02	6.00E+02	1.09E+02	0.00E+00	0.00E+00	0.00E+00	0.00E+00	0.00E+00	0.00E+00
1.47E+03	9.37E+02	6.00E+02	1.22E+02	0.00E+00	0.00E+00	0.00E+00	0.00E+00	0.00E+00	0.00E+00
1.72E+03	1.03E+03	6.01E+02	1.37E+02	0.00E+00	0.00E+00	0.00E+00	0.00E+00	0.00E+00	0.00E+00
2.01E+03	1.14E+03	6.03E+02	1.55E+02	0.00E+00	0.00E+00	0.00E+00	0.00E+00	0.00E+00	0.00E+00

1

time averaged (tav = 3600. s) volume concentration: maximum concentration (volume fraction) along centerline.

downwind distance x (m)	height z (m)	maximum concentration c(x,0,z)	time of max conc (s)	cloud duration (s)
-7.78E+00	0.00E+00	0.00E+00	3.04E+02	6.00E+02
-6.22E+00	0.00E+00	6.72E-03	3.03E+02	6.00E+02
-4.67E+00	0.00E+00	9.92E-03	3.02E+02	6.00E+02
-3.11E+00	0.00E+00	1.24E-02	3.02E+02	6.00E+02
-1.56E+00	0.00E+00	1.45E-02	3.01E+02	6.00E+02
6.66E-16	0.00E+00	1.16E-02	3.00E+02	6.00E+02
1.56E+00	0.00E+00	1.20E-02	3.01E+02	6.00E+02
3.11E+00	0.00E+00	6.63E-03	3.02E+02	6.00E+02
4.67E+00	0.00E+00	6.05E-03	3.02E+02	6.00E+02
6.22E+00	0.00E+00	5.95E-03	3.03E+02	6.00E+02
7.78E+00	0.00E+00	6.02E-03	3.04E+02	6.00E+02
7.91E+00	0.00E+00	5.98E-03	3.04E+02	6.00E+02
8.06E+00	0.00E+00	5.95E-03	3.04E+02	6.00E+02
8.24E+00	0.00E+00	5.91E-03	3.04E+02	6.00E+02
8.46E+00	0.00E+00	5.88E-03	3.04E+02	6.00E+02
8.70E+00	0.00E+00	5.86E-03	3.05E+02	6.00E+02
8.99E+00	0.00E+00	5.85E-03	3.05E+02	6.00E+02
9.33E+00	0.00E+00	5.86E-03	3.05E+02	6.00E+02
9.73E+00	0.00E+00	5.88E-03	3.05E+02	6.00E+02
1.02E+01	0.00E+00	5.93E-03	3.05E+02	6.00E+02
1.07E+01	0.00E+00	5.95E-03	3.06E+02	6.00E+02

1.14E+01	0.00E+00	5.87E-03	3.06E+02	6.00E+02
1.21E+01	0.00E+00	5.36E-03	3.06E+02	6.00E+02
1.30E+01	1.04E+00	4.44E-03	3.07E+02	6.00E+02
1.40E+01	1.56E+00	4.63E-03	3.07E+02	6.00E+02
1.52E+01	2.08E+00	4.36E-03	3.08E+02	6.00E+02
1.66E+01	2.70E+00	4.13E-03	3.09E+02	6.00E+02
1.82E+01	3.43E+00	3.93E-03	3.10E+02	6.00E+02
2.01E+01	4.29E+00	3.76E-03	3.11E+02	6.00E+02
2.24E+01	5.31E+00	3.60E-03	3.12E+02	6.00E+02
2.50E+01	6.50E+00	3.45E-03	3.13E+02	6.00E+02
2.80E+01	7.90E+00	3.31E-03	3.15E+02	6.00E+02
3.16E+01	9.54E+00	3.17E-03	3.16E+02	6.00E+02
3.58E+01	1.14E+01	3.03E-03	3.19E+02	6.00E+02
4.07E+01	1.37E+01	2.90E-03	3.21E+02	6.00E+02
4.64E+01	1.63E+01	2.76E-03	3.24E+02	6.00E+02
5.31E+01	1.93E+01	2.63E-03	3.28E+02	6.00E+02
6.09E+01	2.29E+01	2.50E-03	3.32E+02	6.00E+02
7.01E+01	2.70E+01	2.37E-03	3.37E+02	6.00E+02
8.08E+01	3.18E+01	2.23E-03	3.42E+02	6.00E+02
9.33E+01	3.74E+01	2.10E-03	3.49E+02	6.00E+02
1.08E+02	4.39E+01	1.97E-03	3.56E+02	6.00E+02
1.25E+02	5.15E+01	1.83E-03	3.65E+02	6.00E+02
1.45E+02	6.03E+01	1.70E-03	3.76E+02	6.00E+02
1.69E+02	7.05E+01	1.57E-03	3.88E+02	6.00E+02
1.96E+02	8.24E+01	1.44E-03	4.02E+02	6.00E+02
2.28E+02	9.62E+01	1.31E-03	4.19E+02	6.00E+02
2.66E+02	1.12E+02	1.19E-03	4.39E+02	6.00E+02
3.10E+02	1.31E+02	1.07E-03	4.62E+02	6.00E+02
3.62E+02	1.53E+02	9.67E-04	4.89E+02	6.00E+02
4.22E+02	1.78E+02	8.68E-04	5.20E+02	6.00E+02
4.92E+02	2.08E+02	7.80E-04	5.57E+02	6.00E+02
5.75E+02	2.44E+02	7.05E-04	6.00E+02	6.00E+02
6.72E+02	2.59E+02	6.38E-04	6.37E+02	6.00E+02
7.86E+02	2.59E+02	5.79E-04	6.80E+02	6.00E+02
9.19E+02	2.59E+02	5.23E-04	7.30E+02	6.00E+02
1.07E+03	2.59E+02	4.69E-04	7.88E+02	6.00E+02
1.26E+03	2.59E+02	4.19E-04	8.57E+02	6.00E+02
1.47E+03	2.59E+02	3.73E-04	9.37E+02	6.00E+02
1.72E+03	2.59E+02	3.31E-04	1.03E+03	6.01E+02
2.01E+03	2.59E+02	2.94E-04	1.14E+03	6.03E+02

```
INPUT DATA FILE NAME :  C:\CALPINE\IEEC\TEMP\TANK2.SLB
OUTPUT LIST FILE NAME : C:\CALPINE\IEEC\TEMP\TANK2.LST
```

problem input

```
idspl =         1
ncalc =         1
wms   =  0.017031
cps   =   2093.65
tbp   =    239.70
cmed0 =      0.97
dhe   =  1370837.
cpsl  =   4956.39
rhosl =    639.00
spb   =   2132.50
spc   =    -32.98
ts    =    310.72
qs    =      1.12
as    =    241.92
tsd   =      600.
qtis  =      0.00
hs    =      0.00
tav   =   3600.00
xffm  =   2000.00
zp(1) =      1.50
zp(2) =      0.00
zp(3) =      0.00
zp(4) =      0.00
z0    =  0.100000
za    =     10.00
ua    =      1.50
ta    =    310.72
rh    =     50.00
stab  =      6.00
```

release gas properties

```
molecular weight of source gas (kg)          - wms  =  1.7031E-02
vapor heat capacity, const. p.  (j/kg-k)     - cps  =  2.0937E+03
temperature of source gas (k)                - ts   =  2.3970E+02
density of source gas (kg/m3)                - rhos =  8.6589E-01
boiling point temperature                    - tbp  =  2.3970E+02
liquid mass fraction                         - cmed0=  0.0000E+00
liquid heat capacity (j/kg-k)                - cpsl =  4.9564E+03
heat of vaporization (j/kg)                  - dhe  =  1.3708E+06
liquid source density (kg/m3)                - rhosl=  6.3900E+02
saturation pressure constant                 - spa  =  1.0316E+01
saturation pressure constant (k)             - spb  =  2.1325E+03
```

saturation pressure constant (k)	- spc	= -3.2980E+01

spill characteristics

spill type	- idspl	= 1
mass source rate (kg/s)	- qs	= 1.1200E+00
continuous source duration (s)	- tsd	= 6.0000E+02
continuous source mass (kg)	- qtcs	= 6.7200E+02
instantaneous source mass (kg)	- qtis	= 0.0000E+00
source area (m2)	- as	= 2.4192E+02
vertical vapor velocity (m/s)	- ws	= 5.3467E-03
source half width (m)	- bs	= 7.7769E+00
source height (m)	- hs	= 0.0000E+00
horizontal vapor velocity (m/s)	- us	= 0.0000E+00

field parameters

concentration averaging time (s)	- tav	= 3.6000E+03
mixing layer height (m)	- hmx	= 2.6000E+02
maximum downwind distrace (m)	- xffm	= 2.0000E+03
concentration measurement height (m)	- zp(1)	= 1.5000E+00
	- zp(2)	= 0.0000E+00
	- zp(3)	= 0.0000E+00
	- zp(4)	= 0.0000E+00

ambient meteorological properties

molecular weight of ambient air (kg)	- wmae	= 2.8580E-02
heat capacity of ambient air at const p. (j/kg-k)	- cpaa	= 1.0243E+03
density of ambient air (kg/m3)	- rhoa	= 1.1209E+00
ambient measurement height (m)	- za	= 1.0000E+01
ambient atmospheric pressure (pa=n/m2=j/m3)	- pa	= 1.0133E+05
ambient wind speed (m/s)	- ua	= 1.5000E+00
ambient temperature (k)	- ta	= 3.1072E+02
relative humidity (percent)	- rh	= 5.0000E+01
ambient friction velocity (m/s)	- uastr	= 6.1310E-02
atmospheric stability class value	- stab	= 6.0000E+00
inverse monin-obukhov length (1/m)	- ala	= 5.7143E-02
surface roughness height (m)	- z0	= 1.0000E-01

additional parameters

sub-step multiplier	- ncalc	= 1
number of calculational sub-steps	- nssm	= 3
acceleration of gravity (m/s2)	- grav	= 9.8066E+00
gas constant (j/mol- k)	- rr	= 8.3143E+00
von karman constant	- xk	= 4.1000E-01

1

instantaneous spatially averaged cloud parameters

x	zc	h	bb	b	bbx	bx	cv	rho	t	u	ua
-7.78E+00	0.00E+00	0.00E+00	7.78E+00	7.78E+00	7.78E+00	7.78E+00	0.00E+00	1.12E+00	3.11E+02	0.00E+00	0.00E+00
-6.22E+00	0.00E+00	1.19E+00	7.84E+00	7.78E+00	8.83E+00	8.83E+00	2.89E-02	1.12E+00	3.08E+02	3.08E-01	3.30E-01
-4.67E+00	0.00E+00	1.57E+00	7.92E+00	7.78E+00	9.89E+00	9.89E+00	4.23E-02	1.11E+00	3.07E+02	3.16E-01	3.95E-01
-3.11E+00	0.00E+00	2.08E+00	8.06E+00	7.78E+00	1.10E+01	1.09E+01	5.19E-02	1.11E+00	3.06E+02	2.86E-01	4.69E-01
-1.56E+00	0.00E+00	3.17E+00	8.40E+00	7.78E+00	1.20E+01	1.20E+01	5.84E-02	1.11E+00	3.06E+02	2.13E-01	5.96E-01
6.66E-16	0.00E+00	3.20E+00	1.50E+01	7.78E+00	1.31E+01	1.31E+01	3.69E-02	1.12E+00	3.08E+02	2.35E-01	6.00E-01
1.56E+00	0.00E+00	1.31E+01	1.58E+01	7.78E+00	1.41E+01	1.41E+01	3.82E-02	1.12E+00	3.08E+02	6.33E-02	1.17E+00
3.11E+00	0.00E+00	1.33E+00	3.64E+01	7.77E+00	1.52E+01	1.52E+01	2.08E-02	1.12E+00	3.09E+02	5.78E-01	3.68E-01
4.67E+00	0.00E+00	1.71E+00	3.65E+01	7.78E+00	1.62E+01	1.62E+01	1.90E-02	1.12E+00	3.09E+02	5.62E-01	4.27E-01
6.22E+00	0.00E+00	2.00E+00	3.66E+01	7.78E+00	1.73E+01	1.73E+01	1.87E-02	1.12E+00	3.09E+02	5.49E-01	4.67E-01
7.78E+00	0.00E+00	2.25E+00	3.67E+01	7.79E+00	1.84E+01	1.84E+01	1.89E-02	1.12E+00	3.09E+02	5.34E-01	4.99E-01
7.91E+00	8.85E-04	2.30E+00	3.67E+01	7.79E+00	1.85E+01	1.85E+01	1.88E-02	1.12E+00	3.09E+02	5.26E-01	5.05E-01
8.06E+00	4.14E-03	2.31E+00	3.67E+01	7.79E+00	1.87E+01	1.87E+01	1.87E-02	1.12E+00	3.09E+02	5.27E-01	5.07E-01
8.24E+00	1.09E-02	2.33E+00	3.67E+01	7.79E+00	1.90E+01	1.90E+01	1.85E-02	1.12E+00	3.09E+02	5.28E-01	5.08E-01
8.46E+00	2.29E-02	2.34E+00	3.67E+01	7.79E+00	1.93E+01	1.93E+01	1.83E-02	1.12E+00	3.09E+02	5.30E-01	5.10E-01
8.70E+00	4.21E-02	2.36E+00	3.67E+01	7.79E+00	1.96E+01	1.96E+01	1.81E-02	1.12E+00	3.09E+02	5.32E-01	5.13E-01
8.99E+00	7.17E-02	2.38E+00	3.67E+01	7.79E+00	2.00E+01	2.00E+01	1.79E-02	1.12E+00	3.09E+02	5.34E-01	5.15E-01
9.33E+00	1.16E-01	2.41E+00	3.67E+01	7.79E+00	2.05E+01	2.05E+01	1.76E-02	1.12E+00	3.09E+02	5.37E-01	5.18E-01
9.73E+00	1.79E-01	2.44E+00	3.67E+01	7.78E+00	2.10E+01	2.10E+01	1.73E-02	1.12E+00	3.09E+02	5.40E-01	5.21E-01
1.02E+01	2.69E-01	2.47E+00	3.67E+01	7.78E+00	2.16E+01	2.16E+01	1.70E-02	1.12E+00	3.09E+02	5.43E-01	5.25E-01
1.07E+01	3.96E-01	2.50E+00	3.67E+01	7.78E+00	2.24E+01	2.24E+01	1.66E-02	1.12E+00	3.09E+02	5.47E-01	5.29E-01
1.14E+01	5.71E-01	2.54E+00	3.67E+01	7.78E+00	2.32E+01	2.32E+01	1.62E-02	1.12E+00	3.09E+02	5.51E-01	5.34E-01
1.21E+01	8.10E-01	2.59E+00	3.67E+01	7.78E+00	2.43E+01	2.43E+01	1.58E-02	1.12E+00	3.10E+02	5.55E-01	5.39E-01
1.30E+01	1.13E+00	2.64E+00	3.68E+01	7.77E+00	2.54E+01	2.54E+01	1.53E-02	1.12E+00	3.10E+02	5.61E-01	5.45E-01
1.40E+01	1.56E+00	2.66E+00	3.67E+01	7.76E+00	2.68E+01	2.68E+01	1.46E-02	1.12E+00	3.10E+02	5.87E-01	5.73E-01
1.52E+01	2.08E+00	2.62E+00	3.67E+01	7.74E+00	2.84E+01	2.84E+01	1.37E-02	1.12E+00	3.10E+02	6.36E-01	6.23E-01
1.66E+01	2.70E+00	2.55E+00	3.66E+01	7.72E+00	3.03E+01	3.03E+01	1.30E-02	1.12E+00	3.10E+02	6.89E-01	6.77E-01
1.82E+01	3.43E+00	2.48E+00	3.66E+01	7.70E+00	3.26E+01	3.26E+01	1.24E-02	1.12E+00	3.10E+02	7.45E-01	7.34E-01
2.01E+01	4.29E+00	2.40E+00	3.65E+01	7.68E+00	3.51E+01	3.51E+01	1.18E-02	1.12E+00	3.10E+02	8.05E-01	7.95E-01
2.24E+01	5.31E+00	2.32E+00	3.65E+01	7.66E+00	3.82E+01	3.82E+01	1.13E-02	1.12E+00	3.10E+02	8.69E-01	8.60E-01
2.50E+01	6.50E+00	2.25E+00	3.65E+01	7.64E+00	4.17E+01	4.17E+01	1.09E-02	1.12E+00	3.10E+02	9.37E-01	9.29E-01
2.80E+01	7.90E+00	2.18E+00	3.65E+01	7.63E+00	4.59E+01	4.59E+01	1.04E-02	1.12E+00	3.10E+02	1.01E+00	1.00E+00
3.16E+01	9.54E+00	2.12E+00	3.65E+01	7.61E+00	5.07E+01	5.07E+01	9.98E-03	1.12E+00	3.10E+02	1.08E+00	1.07E+00
3.58E+01	1.14E+01	2.07E+00	3.66E+01	7.60E+00	5.64E+01	5.64E+01	9.56E-03	1.12E+00	3.10E+02	1.16E+00	1.15E+00
4.07E+01	1.37E+01	2.02E+00	3.67E+01	7.59E+00	6.31E+01	6.31E+01	9.15E-03	1.12E+00	3.10E+02	1.23E+00	1.23E+00
4.64E+01	1.63E+01	1.98E+00	3.68E+01	7.57E+00	7.09E+01	7.09E+01	8.74E-03	1.12E+00	3.10E+02	1.31E+00	1.31E+00
5.31E+01	1.93E+01	1.95E+00	3.69E+01	7.56E+00	8.00E+01	8.00E+01	8.33E-03	1.12E+00	3.10E+02	1.39E+00	1.39E+00
6.09E+01	2.29E+01	1.93E+00	3.71E+01	7.55E+00	9.06E+01	9.06E+01	7.92E-03	1.12E+00	3.10E+02	1.48E+00	1.47E+00
7.01E+01	2.70E+01	1.91E+00	3.73E+01	7.54E+00	1.03E+02	1.03E+02	7.52E-03	1.12E+00	3.10E+02	1.56E+00	1.56E+00
8.08E+01	3.18E+01	1.90E+00	3.76E+01	7.53E+00	1.18E+02	1.18E+02	7.12E-03	1.12E+00	3.10E+02	1.64E+00	1.64E+00
9.33E+01	3.74E+01	1.90E+00	3.79E+01	7.52E+00	1.35E+02	1.35E+02	6.72E-03	1.12E+00	3.10E+02	1.73E+00	1.73E+00
1.08E+02	4.39E+01	1.91E+00	3.83E+01	7.51E+00	1.55E+02	1.55E+02	6.32E-03	1.12E+00	3.10E+02	1.81E+00	1.81E+00
1.25E+02	5.15E+01	1.92E+00	3.88E+01	7.50E+00	1.78E+02	1.78E+02	5.93E-03	1.12E+00	3.10E+02	1.90E+00	1.90E+00
1.45E+02	6.03E+01	1.94E+00	3.93E+01	7.50E+00	2.05E+02	2.05E+02	5.54E-03	1.12E+00	3.10E+02	1.98E+00	1.98E+00
1.69E+02	7.05E+01	1.96E+00	4.00E+01	7.49E+00	2.37E+02	2.37E+02	5.17E-03	1.12E+00	3.10E+02	2.06E+00	2.06E+00
1.96E+02	8.24E+01	2.00E+00	4.08E+01	7.48E+00	2.75E+02	2.75E+02	4.80E-03	1.12E+00	3.10E+02	2.14E+00	2.14E+00
2.28E+02	9.62E+01	2.03E+00	4.17E+01	7.48E+00	3.18E+02	3.18E+02	4.45E-03	1.12E+00	3.10E+02	2.22E+00	2.22E+00

2.66E+02	1.12E+02	2.07E+00	4.28E+01	7.48E+00	3.70E+02	3.70E+02	4.11E-03	1.12E+00	3.10E+02	2.30E+00	2.30E+00
3.10E+02	1.31E+02	2.11E+00	4.41E+01	7.48E+00	4.29E+02	4.29E+02	3.80E-03	1.12E+00	3.10E+02	2.37E+00	2.37E+00
3.62E+02	1.53E+02	2.15E+00	4.56E+01	7.48E+00	5.00E+02	4.99E+02	3.50E-03	1.12E+00	3.10E+02	2.44E+00	2.45E+00
4.22E+02	1.78E+02	2.18E+00	4.73E+01	7.48E+00	5.82E+02	5.81E+02	3.24E-03	1.12E+00	3.10E+02	2.51E+00	2.51E+00
4.92E+02	2.08E+02	2.20E+00	4.93E+01	7.48E+00	6.77E+02	6.77E+02	3.00E-03	1.12E+00	3.10E+02	2.57E+00	2.58E+00
5.75E+02	2.44E+02	2.19E+00	5.16E+01	7.48E+00	7.90E+02	7.90E+02	2.82E-03	1.12E+00	3.11E+02	2.63E+00	2.63E+00
6.72E+02	2.59E+02	2.20E+00	5.43E+01	7.48E+00	7.90E+02	7.90E+02	2.67E-03	1.12E+00	3.11E+02	2.65E+00	2.65E+00
7.86E+02	2.59E+02	2.20E+00	5.74E+01	7.48E+00	7.91E+02	7.90E+02	2.52E-03	1.12E+00	3.11E+02	2.65E+00	2.65E+00
9.19E+02	2.59E+02	2.20E+00	6.11E+01	7.48E+00	7.92E+02	7.90E+02	2.36E-03	1.12E+00	3.11E+02	2.65E+00	2.65E+00
1.07E+03	2.59E+02	2.20E+00	6.52E+01	7.48E+00	7.93E+02	7.90E+02	2.21E-03	1.12E+00	3.11E+02	2.65E+00	2.65E+00
1.26E+03	2.59E+02	2.20E+00	7.00E+01	7.48E+00	7.94E+02	7.90E+02	2.05E-03	1.12E+00	3.11E+02	2.65E+00	2.65E+00
1.47E+03	2.59E+02	2.21E+00	7.55E+01	7.48E+00	7.96E+02	7.90E+02	1.90E-03	1.12E+00	3.11E+02	2.65E+00	2.65E+00
1.72E+03	2.59E+02	2.21E+00	8.17E+01	7.48E+00	7.97E+02	7.90E+02	1.74E-03	1.12E+00	3.11E+02	2.65E+00	2.65E+00
2.01E+03	2.59E+02	2.22E+00	8.89E+01	7.48E+00	7.99E+02	7.90E+02	1.60E-03	1.12E+00	3.11E+02	2.65E+00	2.65E+00

1

x	cm	cmv	cmda	cmw	cmwv	wc	vg	ug	w	v	vx
-7.78E+00	0.00E+00	0.00E+00	9.78E-01	2.19E-02	2.19E-02	0.00E+00	0.00E+00	0.00E+00	9.92E-01	3.12E-02	0.00E+00
-6.22E+00	1.74E-02	1.74E-02	9.61E-01	2.15E-02	2.15E-02	0.00E+00	0.00E+00	0.00E+00	5.22E-02	6.83E-03	9.85E-02
-4.67E+00	2.56E-02	2.56E-02	9.53E-01	2.14E-02	2.14E-02	0.00E+00	0.00E+00	0.00E+00	4.05E-02	1.05E-02	1.12E-01
-3.11E+00	3.16E-02	3.16E-02	9.47E-01	2.12E-02	2.12E-02	0.00E+00	0.00E+00	0.00E+00	3.05E-02	1.86E-02	1.28E-01
-1.56E+00	3.56E-02	3.56E-02	9.43E-01	2.11E-02	2.11E-02	0.00E+00	0.00E+00	0.00E+00	2.66E-02	3.56E-02	1.56E-01
6.66E-16	2.23E-02	2.23E-02	9.56E-01	2.14E-02	2.14E-02	0.00E+00	0.00E+00	0.00E+00	2.27E-02	3.39E-02	1.57E-01
1.56E+00	2.31E-02	2.31E-02	9.55E-01	2.14E-02	2.14E-02	0.00E+00	0.00E+00	0.00E+00	4.36E-02	9.93E-02	2.70E-01
3.11E+00	1.25E-02	1.25E-02	9.66E-01	2.16E-02	2.16E-02	0.00E+00	0.00E+00	0.00E+00	9.10E-02	1.94E-02	1.04E-01
4.67E+00	1.14E-02	1.14E-02	9.67E-01	2.17E-02	2.17E-02	0.00E+00	0.00E+00	0.00E+00	5.84E-02	1.39E-02	1.17E-01
6.22E+00	1.12E-02	1.12E-02	9.67E-01	2.17E-02	2.17E-02	0.00E+00	0.00E+00	0.00E+00	4.40E-02	1.08E-02	1.26E-01
7.78E+00	1.14E-02	1.14E-02	9.67E-01	2.17E-02	2.17E-02	0.00E+00	0.00E+00	0.00E+00	3.52E-02	9.16E-03	1.33E-01
7.91E+00	1.13E-02	1.13E-02	9.67E-01	2.17E-02	2.17E-02	7.03E-03	0.00E+00	0.00E+00	3.45E-02	8.91E-03	1.35E-01
8.06E+00	1.12E-02	1.12E-02	9.67E-01	2.17E-02	2.17E-02	1.51E-02	0.00E+00	0.00E+00	3.42E-02	8.93E-03	1.35E-01
8.24E+00	1.11E-02	1.11E-02	9.67E-01	2.17E-02	2.17E-02	2.45E-02	0.00E+00	0.00E+00	3.39E-02	8.96E-03	1.36E-01
8.46E+00	1.10E-02	1.10E-02	9.67E-01	2.17E-02	2.17E-02	3.51E-02	0.00E+00	0.00E+00	3.35E-02	8.99E-03	1.37E-01
8.70E+00	1.09E-02	1.09E-02	9.67E-01	2.17E-02	2.17E-02	4.74E-02	0.00E+00	0.00E+00	3.31E-02	9.02E-03	1.39E-01
8.99E+00	1.07E-02	1.07E-02	9.68E-01	2.17E-02	2.17E-02	6.13E-02	0.00E+00	0.00E+00	3.25E-02	9.06E-03	1.42E-01
9.33E+00	1.06E-02	1.06E-02	9.68E-01	2.17E-02	2.17E-02	7.72E-02	0.00E+00	0.00E+00	3.20E-02	9.10E-03	1.45E-01
9.73E+00	1.04E-02	1.04E-02	9.68E-01	2.17E-02	2.17E-02	9.51E-02	0.00E+00	0.00E+00	3.13E-02	9.15E-03	1.49E-01
1.02E+01	1.02E-02	1.02E-02	9.68E-01	2.17E-02	2.17E-02	1.15E-01	0.00E+00	0.00E+00	3.06E-02	9.21E-03	1.55E-01
1.07E+01	9.97E-03	9.97E-03	9.68E-01	2.17E-02	2.17E-02	1.38E-01	0.00E+00	0.00E+00	2.99E-02	9.27E-03	1.63E-01
1.14E+01	9.73E-03	9.73E-03	9.69E-01	2.17E-02	2.17E-02	1.64E-01	0.00E+00	0.00E+00	2.91E-02	9.34E-03	1.72E-01
1.21E+01	9.48E-03	9.48E-03	9.69E-01	2.17E-02	2.17E-02	1.92E-01	0.00E+00	0.00E+00	2.84E-02	9.42E-03	1.84E-01
1.30E+01	9.20E-03	9.20E-03	9.69E-01	2.17E-02	2.17E-02	2.23E-01	0.00E+00	0.00E+00	2.76E-02	9.51E-03	1.97E-01
1.40E+01	8.74E-03	8.74E-03	9.70E-01	2.17E-02	2.17E-02	2.53E-01	0.00E+00	0.00E+00	5.49E-02	9.97E-03	2.15E-01
1.52E+01	8.21E-03	8.21E-03	9.70E-01	2.17E-02	2.17E-02	2.79E-01	0.00E+00	0.00E+00	4.18E-02	1.08E-02	2.35E-01
1.66E+01	7.78E-03	7.78E-03	9.70E-01	2.18E-02	2.18E-02	3.07E-01	0.00E+00	0.00E+00	3.32E-02	1.17E-02	2.53E-01
1.82E+01	7.42E-03	7.42E-03	9.71E-01	2.18E-02	2.18E-02	3.36E-01	0.00E+00	0.00E+00	2.73E-02	1.27E-02	2.70E-01
2.01E+01	7.09E-03	7.09E-03	9.71E-01	2.18E-02	2.18E-02	3.66E-01	0.00E+00	0.00E+00	2.30E-02	1.38E-02	2.85E-01
2.24E+01	6.79E-03	6.79E-03	9.71E-01	2.18E-02	2.18E-02	3.97E-01	0.00E+00	0.00E+00	1.98E-02	1.49E-02	2.99E-01
2.50E+01	6.50E-03	6.50E-03	9.72E-01	2.18E-02	2.18E-02	4.29E-01	0.00E+00	0.00E+00	1.73E-02	1.61E-02	3.11E-01
2.80E+01	6.23E-03	6.23E-03	9.72E-01	2.18E-02	2.18E-02	4.62E-01	0.00E+00	0.00E+00	1.53E-02	1.73E-02	3.21E-01
3.16E+01	5.97E-03	5.97E-03	9.72E-01	2.18E-02	2.18E-02	4.95E-01	0.00E+00	0.00E+00	1.36E-02	1.86E-02	3.29E-01
3.58E+01	5.72E-03	5.72E-03	9.72E-01	2.18E-02	2.18E-02	5.29E-01	0.00E+00	0.00E+00	1.23E-02	1.99E-02	3.35E-01
4.07E+01	5.47E-03	5.47E-03	9.73E-01	2.18E-02	2.18E-02	5.63E-01	0.00E+00	0.00E+00	1.11E-02	2.12E-02	3.40E-01

4.64E+01	5.22E-03	5.22E-03	9.73E-01	2.18E-02	2.18E-02	5.98E-01	0.00E+00	0.00E+00	1.02E-02	2.26E-02	3.43E-01
5.31E+01	4.98E-03	4.98E-03	9.73E-01	2.18E-02	2.18E-02	6.33E-01	0.00E+00	0.00E+00	9.35E-03	2.40E-02	3.45E-01
6.09E+01	4.74E-03	4.74E-03	9.73E-01	2.18E-02	2.18E-02	6.67E-01	0.00E+00	0.00E+00	8.61E-03	2.54E-02	3.45E-01
7.01E+01	4.49E-03	4.49E-03	9.74E-01	2.18E-02	2.18E-02	7.02E-01	0.00E+00	0.00E+00	7.96E-03	2.68E-02	3.43E-01
8.08E+01	4.25E-03	4.25E-03	9.74E-01	2.18E-02	2.18E-02	7.36E-01	0.00E+00	0.00E+00	7.37E-03	2.83E-02	3.40E-01
9.33E+01	4.01E-03	4.01E-03	9.74E-01	2.18E-02	2.18E-02	7.70E-01	0.00E+00	0.00E+00	6.83E-03	2.97E-02	3.34E-01
1.08E+02	3.78E-03	3.78E-03	9.74E-01	2.18E-02	2.18E-02	8.02E-01	0.00E+00	0.00E+00	6.32E-03	3.11E-02	3.27E-01
1.25E+02	3.54E-03	3.54E-03	9.75E-01	2.18E-02	2.18E-02	8.34E-01	0.00E+00	0.00E+00	5.84E-03	3.25E-02	3.18E-01
1.45E+02	3.31E-03	3.31E-03	9.75E-01	2.18E-02	2.18E-02	8.65E-01	0.00E+00	0.00E+00	5.37E-03	3.38E-02	3.06E-01
1.69E+02	3.09E-03	3.09E-03	9.75E-01	2.19E-02	2.19E-02	8.94E-01	0.00E+00	0.00E+00	4.92E-03	3.51E-02	2.92E-01
1.96E+02	2.87E-03	2.87E-03	9.75E-01	2.19E-02	2.19E-02	9.22E-01	0.00E+00	0.00E+00	4.46E-03	3.64E-02	2.74E-01
2.28E+02	2.66E-03	2.66E-03	9.75E-01	2.19E-02	2.19E-02	9.49E-01	0.00E+00	0.00E+00	3.99E-03	3.76E-02	2.54E-01
2.66E+02	2.45E-03	2.45E-03	9.76E-01	2.19E-02	2.19E-02	9.76E-01	0.00E+00	0.00E+00	3.51E-03	3.87E-02	2.30E-01
3.10E+02	2.27E-03	2.27E-03	9.76E-01	2.19E-02	2.19E-02	1.00E+00	0.00E+00	0.00E+00	3.00E-03	3.97E-02	2.01E-01
3.62E+02	2.09E-03	2.09E-03	9.76E-01	2.19E-02	2.19E-02	1.03E+00	0.00E+00	0.00E+00	2.45E-03	4.06E-02	1.68E-01
4.22E+02	1.93E-03	1.93E-03	9.76E-01	2.19E-02	2.19E-02	1.06E+00	0.00E+00	0.00E+00	1.84E-03	4.14E-02	1.28E-01
4.92E+02	1.79E-03	1.79E-03	9.76E-01	2.19E-02	2.19E-02	1.10E+00	0.00E+00	0.00E+00	1.15E-03	4.21E-02	8.13E-02
5.75E+02	1.68E-03	1.68E-03	9.76E-01	2.19E-02	2.19E-02	1.15E+00	0.00E+00	0.00E+00	3.61E-04	4.26E-02	2.53E-02
6.72E+02	1.59E-03	1.59E-03	9.77E-01	2.19E-02	2.19E-02	1.22E+00	0.00E+00	0.00E+00	2.42E-05	4.24E-02	1.03E-02
7.86E+02	1.50E-03	1.50E-03	9.77E-01	2.19E-02	2.19E-02	1.30E+00	0.00E+00	0.00E+00	2.43E-05	4.18E-02	1.03E-02
9.19E+02	1.41E-03	1.41E-03	9.77E-01	2.19E-02	2.19E-02	1.37E+00	0.00E+00	0.00E+00	2.43E-05	4.12E-02	1.03E-02
1.07E+03	1.32E-03	1.32E-03	9.77E-01	2.19E-02	2.19E-02	1.44E+00	0.00E+00	0.00E+00	2.43E-05	4.05E-02	1.03E-02
1.26E+03	1.22E-03	1.22E-03	9.77E-01	2.19E-02	2.19E-02	1.51E+00	0.00E+00	0.00E+00	2.43E-05	3.97E-02	1.03E-02
1.47E+03	1.13E-03	1.13E-03	9.77E-01	2.19E-02	2.19E-02	1.58E+00	0.00E+00	0.00E+00	2.44E-05	3.89E-02	1.03E-02
1.72E+03	1.04E-03	1.04E-03	9.77E-01	2.19E-02	2.19E-02	1.64E+00	0.00E+00	0.00E+00	2.44E-05	3.80E-02	1.02E-02
2.01E+03	9.52E-04	9.52E-04	9.77E-01	2.19E-02	2.19E-02	1.70E+00	0.00E+00	0.00E+00	2.45E-05	3.70E-02	1.02E-02

1

time averaged (tav = 3600. s) volume concentration: concentration contour parameters

c(x,y,z,t) = cc(x) * (erf(xa)-erf(xb)) * (erf(ya)-erf(yb)) * (exp(-za*za)+exp(-zb*zb))

```
c(x,y,z,t) = concentration (volume fraction) at (x,y,z,t)
         x = downwind distance (m)
         y = crosswind horizontal distance (m)
         z = height (m)
         t = time (s)

       erf = error functon
        xa = (x-xc+bx)/(sr2*betax)
        xb = (x-xc-bx)/(sr2*betax)
        ya = (y+b)/(sr2*betac)
        yb = (y-b)/(sr2*betac)
       exp = exponential function
        za = (z-zc)/(sr2*sig)
        zb = (z+zc)/(sr2*sig)
       sr2 = sqrt(2.0)
```

x	cc(x)	b(x)	betac(x)	zc(x)	sig(x)	t	xc(t)	bx(t)	betax(t)
-7.78E+00	0.00E+00	7.78E+00	6.35E-02	0.00E+00	0.00E+00	3.29E+01	0.00E+00	7.78E+00	6.35E-02
-6.22E+00	5.04E-03	7.78E+00	5.87E-01	0.00E+00	6.87E-01	3.78E+01	7.78E-01	8.83E+00	7.21E-02
-4.67E+00	7.44E-03	7.78E+00	8.73E-01	0.00E+00	9.05E-01	4.27E+01	1.56E+00	9.89E+00	8.08E-02

-3.11E+00	9.29E-03	7.78E+00	1.24E+00	0.00E+00	1.20E+00
-1.56E+00	1.09E-02	7.78E+00	1.84E+00	0.00E+00	1.83E+00
6.66E-16	1.23E-02	7.78E+00	7.40E+00	0.00E+00	1.85E+00
1.56E+00	1.34E-02	7.78E+00	7.93E+00	0.00E+00	7.55E+00
3.11E+00	1.69E-02	7.77E+00	2.05E+01	0.00E+00	7.69E-01
4.67E+00	1.54E-02	7.78E+00	2.06E+01	0.00E+00	9.89E-01
6.22E+00	1.52E-02	7.78E+00	2.06E+01	0.00E+00	1.15E+00
7.78E+00	1.54E-02	7.79E+00	2.07E+01	0.00E+00	1.30E+00
7.91E+00	1.53E-02	7.79E+00	2.07E+01	8.85E-04	1.33E+00
8.06E+00	1.52E-02	7.79E+00	2.07E+01	4.14E-03	1.33E+00
8.24E+00	1.51E-02	7.79E+00	2.07E+01	1.09E-02	1.34E+00
8.46E+00	1.51E-02	7.79E+00	2.07E+01	2.29E-02	1.34E+00
8.70E+00	1.50E-02	7.79E+00	2.07E+01	4.21E-02	1.34E+00
8.99E+00	1.50E-02	7.79E+00	2.07E+01	7.17E-02	1.33E+00
9.33E+00	1.51E-02	7.79E+00	2.07E+01	1.16E-01	1.32E+00
9.73E+00	1.52E-02	7.78E+00	2.07E+01	1.79E-01	1.30E+00
1.02E+01	1.55E-02	7.78E+00	2.07E+01	2.69E-01	1.27E+00
1.07E+01	1.61E-02	7.78E+00	2.07E+01	3.96E-01	1.22E+00
1.14E+01	1.71E-02	7.78E+00	2.07E+01	5.71E-01	1.14E+00
1.21E+01	1.88E-02	7.78E+00	2.07E+01	8.10E-01	1.03E+00
1.30E+01	2.20E-02	7.77E+00	2.08E+01	1.13E+00	8.71E-01
1.40E+01	2.38E-02	7.76E+00	2.07E+01	1.56E+00	7.68E-01
1.52E+01	2.24E-02	7.74E+00	2.07E+01	2.08E+00	7.55E-01
1.66E+01	2.13E-02	7.72E+00	2.07E+01	2.70E+00	7.37E-01
1.82E+01	2.03E-02	7.70E+00	2.07E+01	3.43E+00	7.15E-01
2.01E+01	1.95E-02	7.68E+00	2.06E+01	4.29E+00	6.93E-01
2.24E+01	1.87E-02	7.66E+00	2.06E+01	5.31E+00	6.71E-01
2.50E+01	1.80E-02	7.64E+00	2.06E+01	6.50E+00	6.50E-01
2.80E+01	1.73E-02	7.63E+00	2.07E+01	7.90E+00	6.30E-01
3.16E+01	1.66E-02	7.61E+00	2.07E+01	9.54E+00	6.12E-01
3.58E+01	1.60E-02	7.60E+00	2.07E+01	1.14E+01	5.97E-01
4.07E+01	1.54E-02	7.59E+00	2.08E+01	1.37E+01	5.83E-01
4.64E+01	1.47E-02	7.57E+00	2.09E+01	1.63E+01	5.72E-01
5.31E+01	1.42E-02	7.56E+00	2.10E+01	1.93E+01	5.63E-01
6.09E+01	1.36E-02	7.55E+00	2.12E+01	2.29E+01	5.56E-01
7.01E+01	1.30E-02	7.54E+00	2.14E+01	2.70E+01	5.51E-01
8.08E+01	1.25E-02	7.53E+00	2.16E+01	3.18E+01	5.49E-01
9.33E+01	1.19E-02	7.52E+00	2.19E+01	3.74E+01	5.48E-01
1.08E+02	1.14E-02	7.51E+00	2.22E+01	4.39E+01	5.50E-01
1.25E+02	1.09E-02	7.50E+00	2.27E+01	5.15E+01	5.54E-01
1.45E+02	1.04E-02	7.50E+00	2.32E+01	6.03E+01	5.59E-01
1.69E+02	1.00E-02	7.49E+00	2.38E+01	7.05E+01	5.67E-01
1.96E+02	9.61E-03	7.48E+00	2.46E+01	8.24E+01	5.76E-01
2.28E+02	9.25E-03	7.48E+00	2.56E+01	9.62E+01	5.86E-01
2.66E+02	8.94E-03	7.48E+00	2.68E+01	1.12E+02	5.97E-01
3.10E+02	8.69E-03	7.48E+00	2.83E+01	1.31E+02	6.09E-01
3.62E+02	8.50E-03	7.48E+00	3.00E+01	1.53E+02	6.20E-01
4.22E+02	8.40E-03	7.48E+00	3.21E+01	1.78E+02	6.29E-01
4.92E+02	8.39E-03	7.48E+00	3.46E+01	2.08E+02	6.34E-01
5.75E+02	8.54E-03	7.48E+00	3.76E+01	2.44E+02	6.32E-01
6.72E+02	8.85E-03	7.48E+00	4.12E+01	2.59E+02	6.34E-01
7.86E+02	9.20E-03	7.48E+00	4.54E+01	2.59E+02	6.34E-01

4.85E+01	2.33E+00	1.09E+01	8.94E-02
5.44E+01	3.11E+00	1.20E+01	9.80E-02
5.65E+01	3.89E+00	1.31E+01	1.07E-01
5.85E+01	4.67E+00	1.41E+01	1.15E-01
6.09E+01	5.44E+00	1.52E+01	1.24E-01
6.33E+01	6.22E+00	1.62E+01	1.33E-01
6.61E+01	7.00E+00	1.73E+01	1.41E-01
6.88E+01	7.78E+00	1.84E+01	1.50E-01
6.93E+01	7.91E+00	1.85E+01	1.51E-01
6.99E+01	8.06E+00	1.87E+01	1.53E-01
7.06E+01	8.24E+00	1.90E+01	1.55E-01
7.14E+01	8.46E+00	1.93E+01	1.57E-01
7.23E+01	8.70E+00	1.96E+01	1.60E-01
7.34E+01	8.99E+00	2.00E+01	1.63E-01
7.47E+01	9.33E+00	2.05E+01	1.67E-01
7.61E+01	9.73E+00	2.10E+01	1.72E-01
7.79E+01	1.02E+01	2.16E+01	1.77E-01
7.99E+01	1.07E+01	2.24E+01	1.83E-01
8.22E+01	1.14E+01	2.32E+01	1.90E-01
8.49E+01	1.21E+01	2.43E+01	1.98E-01
8.80E+01	1.30E+01	2.54E+01	2.08E-01
9.15E+01	1.40E+01	2.68E+01	2.19E-01
9.54E+01	1.52E+01	2.84E+01	2.32E-01
9.96E+01	1.66E+01	3.03E+01	2.48E-01
1.04E+02	1.82E+01	3.26E+01	2.66E-01
1.09E+02	2.01E+01	3.51E+01	2.87E-01
1.14E+02	2.24E+01	3.82E+01	3.12E-01
1.20E+02	2.50E+01	4.17E+01	3.41E-01
1.26E+02	2.80E+01	4.59E+01	3.75E-01
1.33E+02	3.16E+01	5.07E+01	4.14E-01
1.41E+02	3.58E+01	5.64E+01	4.61E-01
1.49E+02	4.07E+01	6.31E+01	5.15E-01
1.58E+02	4.64E+01	7.09E+01	5.79E-01
1.68E+02	5.31E+01	8.00E+01	6.53E-01
1.79E+02	6.09E+01	9.06E+01	7.40E-01
1.91E+02	7.01E+01	1.03E+02	8.42E-01
2.04E+02	8.08E+01	1.18E+02	9.61E-01
2.19E+02	9.33E+01	1.35E+02	1.10E+00
2.36E+02	1.08E+02	1.55E+02	1.26E+00
2.54E+02	1.25E+02	1.78E+02	1.45E+00
2.75E+02	1.45E+02	2.05E+02	1.68E+00
2.98E+02	1.69E+02	2.37E+02	1.94E+00
3.24E+02	1.96E+02	2.75E+02	2.24E+00
3.54E+02	2.28E+02	3.18E+02	2.60E+00
3.87E+02	2.66E+02	3.70E+02	3.02E+00
4.24E+02	3.10E+02	4.29E+02	3.51E+00
4.67E+02	3.62E+02	4.99E+02	4.08E+00
5.16E+02	4.22E+02	5.81E+02	4.75E+00
5.71E+02	4.92E+02	6.77E+02	5.53E+00
6.35E+02	5.75E+02	7.90E+02	6.45E+00
6.37E+02	6.72E+02	7.90E+02	2.17E+01
6.80E+02	7.86E+02	7.90E+02	2.96E+01

9.19E+02	9.58E-03	7.48E+00	5.03E+01	2.59E+02	6.35E-01	7.30E+02	9.19E+02	7.90E+02	3.67E+01
1.07E+03	9.97E-03	7.48E+00	5.60E+01	2.59E+02	6.36E-01	7.88E+02	1.07E+03	7.90E+02	4.36E+01
1.26E+03	1.04E-02	7.48E+00	6.27E+01	2.59E+02	6.36E-01	8.57E+02	1.26E+03	7.90E+02	5.05E+01
1.47E+03	1.08E-02	7.48E+00	7.03E+01	2.59E+02	6.37E-01	9.37E+02	1.47E+03	7.90E+02	5.75E+01
1.72E+03	1.12E-02	7.48E+00	7.91E+01	2.59E+02	6.39E-01	1.03E+03	1.72E+03	7.90E+02	6.47E+01
2.01E+03	1.15E-02	7.48E+00	8.91E+01	2.59E+02	6.40E-01	1.14E+03	2.01E+03	7.90E+02	7.23E+01

1

time averaged (tav = 3600. s) volume concentration: concentration in the z = 1.50 plane.

downwind distance x (m)	time of max conc (s)	cloud duration (s)	effective half width bbc (m)	average concentration (volume fraction) at (x,y,z) y/bbc= 0.0	y/bbc= 0.5	y/bbc= 1.0	y/bbc= 1.5	y/bbc= 2.0	y/bbc= 2.5
-7.78E+00	3.04E+02	6.00E+02	7.78E+00	0.00E+00	0.00E+00	0.00E+00	0.00E+00	0.00E+00	0.00E+00
-6.22E+00	3.03E+02	6.00E+02	7.84E+00	6.17E-04	6.17E-04	2.81E-04	3.25E-15	0.00E+00	0.00E+00
-4.67E+00	3.02E+02	6.00E+02	7.92E+00	2.51E-03	2.51E-03	1.09E-03	3.17E-09	0.00E+00	0.00E+00
-3.11E+00	3.02E+02	6.00E+02	8.07E+00	5.66E-03	5.65E-03	2.30E-03	1.35E-06	4.07E-14	0.00E+00
-1.56E+00	3.01E+02	6.00E+02	8.41E+00	1.04E-02	1.01E-02	3.80E-03	4.51E-05	4.82E-09	3.41E-15
6.66E-16	3.00E+02	6.00E+02	1.50E+01	8.32E-03	5.83E-03	1.93E-03	2.75E-04	1.58E-05	3.51E-07
1.56E+00	3.01E+02	6.00E+02	1.58E+01	1.18E-02	8.22E-03	2.71E-03	3.92E-04	2.36E-05	5.64E-07
3.11E+00	3.02E+02	6.00E+02	3.64E+01	9.90E-04	6.81E-04	2.21E-04	3.39E-05	2.44E-06	8.21E-08
4.67E+00	3.02E+02	6.00E+02	3.65E+01	1.91E-03	1.32E-03	4.28E-04	6.55E-05	4.71E-06	1.59E-07
6.22E+00	3.03E+02	6.00E+02	3.66E+01	2.56E-03	1.76E-03	5.71E-04	8.74E-05	6.29E-06	2.12E-07
7.78E+00	3.04E+02	6.00E+02	3.67E+01	3.09E-03	2.13E-03	6.90E-04	1.06E-04	7.61E-06	2.56E-07
7.91E+00	3.04E+02	6.00E+02	3.67E+01	3.16E-03	2.17E-03	7.06E-04	1.08E-04	7.78E-06	2.62E-07
8.06E+00	3.04E+02	6.00E+02	3.67E+01	3.16E-03	2.17E-03	7.05E-04	1.08E-04	7.77E-06	2.62E-07
8.24E+00	3.04E+02	6.00E+02	3.67E+01	3.15E-03	2.17E-03	7.04E-04	1.08E-04	7.76E-06	2.61E-07
8.46E+00	3.04E+02	6.00E+02	3.67E+01	3.14E-03	2.16E-03	7.02E-04	1.07E-04	7.73E-06	2.61E-07
8.70E+00	3.05E+02	6.00E+02	3.67E+01	3.13E-03	2.15E-03	6.99E-04	1.07E-04	7.71E-06	2.60E-07
8.99E+00	3.05E+02	6.00E+02	3.67E+01	3.12E-03	2.14E-03	6.96E-04	1.07E-04	7.67E-06	2.58E-07
9.33E+00	3.05E+02	6.00E+02	3.67E+01	3.10E-03	2.13E-03	6.91E-04	1.06E-04	7.62E-06	2.57E-07
9.73E+00	3.05E+02	6.00E+02	3.67E+01	3.07E-03	2.11E-03	6.86E-04	1.05E-04	7.56E-06	2.55E-07
1.02E+01	3.05E+02	6.00E+02	3.67E+01	3.04E-03	2.09E-03	6.79E-04	1.04E-04	7.48E-06	2.52E-07
1.07E+01	3.06E+02	6.00E+02	3.67E+01	3.01E-03	2.07E-03	6.73E-04	1.03E-04	7.41E-06	2.50E-07
1.14E+01	3.06E+02	6.00E+02	3.68E+01	3.02E-03	2.08E-03	6.75E-04	1.03E-04	7.44E-06	2.51E-07
1.21E+01	3.06E+02	6.00E+02	3.68E+01	3.21E-03	2.21E-03	7.17E-04	1.10E-04	7.90E-06	2.66E-07
1.30E+01	3.07E+02	6.00E+02	3.68E+01	3.96E-03	2.72E-03	8.83E-04	1.35E-04	9.74E-06	3.28E-07
1.40E+01	3.07E+02	6.00E+02	3.68E+01	4.62E-03	3.18E-03	1.03E-03	1.58E-04	1.14E-05	3.83E-07
1.52E+01	3.08E+02	6.00E+02	3.67E+01	3.24E-03	2.23E-03	7.25E-04	1.11E-04	7.99E-06	2.69E-07
1.66E+01	3.09E+02	6.00E+02	3.66E+01	1.11E-03	7.61E-04	2.47E-04	3.79E-05	2.73E-06	9.19E-08
1.82E+01	3.10E+02	6.00E+02	3.66E+01	1.05E-04	7.23E-05	2.35E-05	3.60E-06	2.59E-07	8.72E-09
2.01E+01	3.11E+02	6.00E+02	3.66E+01	1.15E-06	7.89E-07	2.56E-07	3.92E-08	2.82E-09	9.52E-11
2.24E+01	3.12E+02	6.00E+02	3.66E+01	3.72E-10	2.56E-10	8.32E-11	1.27E-11	9.17E-13	3.09E-14
2.50E+01	3.13E+02	6.00E+02	3.66E+01	4.83E-16	3.32E-16	1.08E-16	1.65E-17	1.19E-18	4.01E-20
2.80E+01	3.15E+02	6.00E+02	3.66E+01	1.36E-25	9.36E-26	3.04E-26	4.65E-27	3.35E-28	1.13E-29
3.16E+01	3.16E+02	6.00E+02	3.67E+01	1.32E-40	9.10E-41	2.95E-41	4.52E-42	3.26E-43	1.10E-44
3.58E+01	3.19E+02	6.00E+02	3.67E+01	1.37E-63	9.45E-64	3.07E-64	4.70E-65	3.38E-66	1.14E-67
4.07E+01	3.21E+02	6.00E+02	3.68E+01	5.51E-98	3.79E-98	1.23E-98	1.88E-99	1.36-100	4.58-102
4.64E+01	3.24E+02	6.00E+02	3.70E+01	1.93-148	1.33-148	4.31-149	6.61-150	4.76-151	1.61-152
5.31E+01	3.28E+02	6.00E+02	3.72E+01	3.97-221	2.73-221	8.87-222	1.36-222	9.79-224	3.31-225
6.09E+01	3.32E+02	6.00E+02	3.74E+01	4.94-324	4.94-324	0.00E+00	0.00E+00	0.00E+00	0.00E+00

7.01E+01	3.37E+02	6.00E+02	3.78E+01	0.00E+00	0.00E+00	0.00E+00	0.00E+00	0.00E+00	0.00E+00
8.08E+01	3.42E+02	6.00E+02	3.81E+01	0.00E+00	0.00E+00	0.00E+00	0.00E+00	0.00E+00	0.00E+00
9.33E+01	3.49E+02	6.00E+02	3.86E+01	0.00E+00	0.00E+00	0.00E+00	0.00E+00	0.00E+00	0.00E+00
1.08E+02	3.56E+02	6.00E+02	3.92E+01	0.00E+00	0.00E+00	0.00E+00	0.00E+00	0.00E+00	0.00E+00
1.25E+02	3.65E+02	6.00E+02	4.00E+01	0.00E+00	0.00E+00	0.00E+00	0.00E+00	0.00E+00	0.00E+00
1.45E+02	3.76E+02	6.00E+02	4.09E+01	0.00E+00	0.00E+00	0.00E+00	0.00E+00	0.00E+00	0.00E+00
1.69E+02	3.88E+02	6.00E+02	4.20E+01	0.00E+00	0.00E+00	0.00E+00	0.00E+00	0.00E+00	0.00E+00
1.96E+02	4.02E+02	6.00E+02	4.33E+01	0.00E+00	0.00E+00	0.00E+00	0.00E+00	0.00E+00	0.00E+00
2.28E+02	4.19E+02	6.00E+02	4.50E+01	0.00E+00	0.00E+00	0.00E+00	0.00E+00	0.00E+00	0.00E+00
2.66E+02	4.39E+02	6.00E+02	4.70E+01	0.00E+00	0.00E+00	0.00E+00	0.00E+00	0.00E+00	0.00E+00
3.10E+02	4.62E+02	6.00E+02	4.95E+01	0.00E+00	0.00E+00	0.00E+00	0.00E+00	0.00E+00	0.00E+00
3.62E+02	4.89E+02	6.00E+02	5.25E+01	0.00E+00	0.00E+00	0.00E+00	0.00E+00	0.00E+00	0.00E+00
4.22E+02	5.20E+02	6.00E+02	5.61E+01	0.00E+00	0.00E+00	0.00E+00	0.00E+00	0.00E+00	0.00E+00
4.92E+02	5.57E+02	6.00E+02	6.05E+01	0.00E+00	0.00E+00	0.00E+00	0.00E+00	0.00E+00	0.00E+00
5.75E+02	6.00E+02	6.00E+02	6.56E+01	0.00E+00	0.00E+00	0.00E+00	0.00E+00	0.00E+00	0.00E+00
6.72E+02	6.37E+02	6.00E+02	7.17E+01	0.00E+00	0.00E+00	0.00E+00	0.00E+00	0.00E+00	0.00E+00
7.86E+02	6.80E+02	6.00E+02	7.90E+01	0.00E+00	0.00E+00	0.00E+00	0.00E+00	0.00E+00	0.00E+00
9.19E+02	7.30E+02	6.00E+02	8.74E+01	0.00E+00	0.00E+00	0.00E+00	0.00E+00	0.00E+00	0.00E+00
1.07E+03	7.88E+02	6.00E+02	9.73E+01	0.00E+00	0.00E+00	0.00E+00	0.00E+00	0.00E+00	0.00E+00
1.26E+03	8.57E+02	6.00E+02	1.09E+02	0.00E+00	0.00E+00	0.00E+00	0.00E+00	0.00E+00	0.00E+00
1.47E+03	9.37E+02	6.00E+02	1.22E+02	0.00E+00	0.00E+00	0.00E+00	0.00E+00	0.00E+00	0.00E+00
1.72E+03	1.03E+03	6.01E+02	1.37E+02	0.00E+00	0.00E+00	0.00E+00	0.00E+00	0.00E+00	0.00E+00
2.01E+03	1.14E+03	6.03E+02	1.55E+02	0.00E+00	0.00E+00	0.00E+00	0.00E+00	0.00E+00	0.00E+00

1

time averaged (tav = 3600. s) volume concentration: maximum concentration (volume fraction) along centerline.

downwind distance x (m)	height z (m)	maximum concentration c(x,0,z)	time of max conc (s)	cloud duration (s)
-7.78E+00	0.00E+00	0.00E+00	3.04E+02	6.00E+02
-6.22E+00	0.00E+00	6.72E-03	3.03E+02	6.00E+02
-4.67E+00	0.00E+00	9.92E-03	3.02E+02	6.00E+02
-3.11E+00	0.00E+00	1.24E-02	3.02E+02	6.00E+02
-1.56E+00	0.00E+00	1.45E-02	3.01E+02	6.00E+02
6.66E-16	0.00E+00	1.16E-02	3.00E+02	6.00E+02
1.56E+00	0.00E+00	1.20E-02	3.01E+02	6.00E+02
3.11E+00	0.00E+00	6.63E-03	3.02E+02	6.00E+02
4.67E+00	0.00E+00	6.05E-03	3.02E+02	6.00E+02
6.22E+00	0.00E+00	5.95E-03	3.03E+02	6.00E+02
7.78E+00	0.00E+00	6.02E-03	3.04E+02	6.00E+02
7.91E+00	0.00E+00	5.98E-03	3.04E+02	6.00E+02
8.06E+00	0.00E+00	5.95E-03	3.04E+02	6.00E+02
8.24E+00	0.00E+00	5.91E-03	3.04E+02	6.00E+02
8.46E+00	0.00E+00	5.88E-03	3.04E+02	6.00E+02
8.70E+00	0.00E+00	5.86E-03	3.05E+02	6.00E+02
8.99E+00	0.00E+00	5.85E-03	3.05E+02	6.00E+02
9.33E+00	0.00E+00	5.86E-03	3.05E+02	6.00E+02
9.73E+00	0.00E+00	5.88E-03	3.05E+02	6.00E+02
1.02E+01	0.00E+00	5.93E-03	3.05E+02	6.00E+02
1.07E+01	0.00E+00	5.95E-03	3.06E+02	6.00E+02

1.14E+01	0.00E+00	5.87E-03	3.06E+02	6.00E+02
1.21E+01	0.00E+00	5.36E-03	3.06E+02	6.00E+02
1.30E+01	1.04E+00	4.44E-03	3.07E+02	6.00E+02
1.40E+01	1.56E+00	4.63E-03	3.07E+02	6.00E+02
1.52E+01	2.08E+00	4.36E-03	3.08E+02	6.00E+02
1.66E+01	2.70E+00	4.13E-03	3.09E+02	6.00E+02
1.82E+01	3.43E+00	3.93E-03	3.10E+02	6.00E+02
2.01E+01	4.29E+00	3.76E-03	3.11E+02	6.00E+02
2.24E+01	5.31E+00	3.60E-03	3.12E+02	6.00E+02
2.50E+01	6.50E+00	3.45E-03	3.13E+02	6.00E+02
2.80E+01	7.90E+00	3.31E-03	3.15E+02	6.00E+02
3.16E+01	9.54E+00	3.17E-03	3.16E+02	6.00E+02
3.58E+01	1.14E+01	3.03E-03	3.19E+02	6.00E+02
4.07E+01	1.37E+01	2.90E-03	3.21E+02	6.00E+02
4.64E+01	1.63E+01	2.76E-03	3.24E+02	6.00E+02
5.31E+01	1.93E+01	2.63E-03	3.28E+02	6.00E+02
6.09E+01	2.29E+01	2.50E-03	3.32E+02	6.00E+02
7.01E+01	2.70E+01	2.37E-03	3.37E+02	6.00E+02
8.08E+01	3.18E+01	2.23E-03	3.42E+02	6.00E+02
9.33E+01	3.74E+01	2.10E-03	3.49E+02	6.00E+02
1.08E+02	4.39E+01	1.97E-03	3.56E+02	6.00E+02
1.25E+02	5.15E+01	1.83E-03	3.65E+02	6.00E+02
1.45E+02	6.03E+01	1.70E-03	3.76E+02	6.00E+02
1.69E+02	7.05E+01	1.57E-03	3.88E+02	6.00E+02
1.96E+02	8.24E+01	1.44E-03	4.02E+02	6.00E+02
2.28E+02	9.62E+01	1.31E-03	4.19E+02	6.00E+02
2.66E+02	1.12E+02	1.19E-03	4.39E+02	6.00E+02
3.10E+02	1.31E+02	1.07E-03	4.62E+02	6.00E+02
3.62E+02	1.53E+02	9.67E-04	4.89E+02	6.00E+02
4.22E+02	1.78E+02	8.68E-04	5.20E+02	6.00E+02
4.92E+02	2.08E+02	7.80E-04	5.57E+02	6.00E+02
5.75E+02	2.44E+02	7.05E-04	6.00E+02	6.00E+02
6.72E+02	2.59E+02	6.38E-04	6.37E+02	6.00E+02
7.86E+02	2.59E+02	5.79E-04	6.80E+02	6.00E+02
9.19E+02	2.59E+02	5.23E-04	7.30E+02	6.00E+02
1.07E+03	2.59E+02	4.69E-04	7.88E+02	6.00E+02
1.26E+03	2.59E+02	4.19E-04	8.57E+02	6.00E+02
1.47E+03	2.59E+02	3.73E-04	9.37E+02	6.00E+02
1.72E+03	2.59E+02	3.31E-04	1.03E+03	6.01E+02
2.01E+03	2.59E+02	2.94E-04	1.14E+03	6.03E+02

INPUT DATA FILE NAME : C:\CALPINE\IEEC\TEMP\TANK3.SLB
OUTPUT LIST FILE NAME : C:\CALPINE\IEEC\TEMP\TANK3.LST

problem input

idspl	=	1
ncalc	=	1
wms	=	0.017031
cps	=	2093.65
tbp	=	239.70
cmed0	=	0.97
dhe	=	1370837.
cpsl	=	4956.39
rhosl	=	639.00
spb	=	2132.50
spc	=	-32.98
ts	=	310.72
qs	=	1.12
as	=	241.92
tsd	=	600.
qtis	=	0.00
hs	=	0.00
tav	=	1800.00
xffm	=	2000.00
zp(1)	=	1.50
zp(2)	=	0.00
zp(3)	=	0.00
zp(4)	=	0.00
z0	=	0.100000
za	=	10.00
ua	=	1.50
ta	=	310.72
rh	=	50.00
stab	=	6.00

release gas properties

molecular weight of source gas (kg)	- wms	=	1.7031E-02
vapor heat capacity, const. p. (j/kg-k)	- cps	=	2.0937E+03
temperature of source gas (k)	- ts	=	2.3970E+02
density of source gas (kg/m3)	- rhos	=	8.6589E-01
boiling point temperature	- tbp	=	2.3970E+02
liquid mass fraction	- cmed0	=	0.0000E+00
liquid heat capacity (j/kg-k)	- cpsl	=	4.9564E+03
heat of vaporization (j/kg)	- dhe	=	1.3708E+06
liquid source density (kg/m3)	- rhosl	=	6.3900E+02
saturation pressure constant	- spa	=	1.0316E+01
saturation pressure constant (k)	- spb	=	2.1325E+03

```
 saturation pressure constant (k)                    - spc   = -3.2980E+01


spill characteristics

 spill type                                          - idspl=           1
 mass source rate (kg/s)                             - qs    =  1.1200E+00
 continuous source duration (s)                      - tsd   =  6.0000E+02
 continuous source mass (kg)                         - qtcs  =  6.7200E+02
 instantaneous source mass (kg)                      - qtis  =  0.0000E+00
 source area (m2)                                    - as    =  2.4192E+02
 vertical vapor velocity (m/s)                       - ws    =  5.3467E-03
 source half width (m)                               - bs    =  7.7769E+00
 source height (m)                                   - hs    =  0.0000E+00
 horizontal vapor velocity (m/s)                     - us    =  0.0000E+00


field parameters

 concentration averaging time (s)                    - tav   =  1.8000E+03
 mixing layer height (m)                             - hmx   =  2.6000E+02
 maximum downwind distrace (m)                       - xffm  =  2.0000E+03
 concentration measurement height (m)                - zp(1)=  1.5000E+00
                                                     - zp(2)=  0.0000E+00
                                                     - zp(3)=  0.0000E+00
                                                     - zp(4)=  0.0000E+00


ambient meteorological properties

 molecular weight of ambient air (kg)               - wmae  =  2.8580E-02
 heat capacity of ambient air at const p. (j/kg-k)- cpaa  =  1.0243E+03
 density of ambient air (kg/m3)                     - rhoa  =  1.1209E+00
 ambient measurement height (m)                     - za    =  1.0000E+01
 ambient atmospheric pressure (pa=n/m2=j/m3)        - pa    =  1.0133E+05
 ambient wind speed (m/s)                           - ua    =  1.5000E+00
 ambient temperature (k)                            - ta    =  3.1072E+02
 relative humidity (percent)                        - rh    =  5.0000E+01
 ambient friction velocity (m/s)                    - uastr =  6.1310E-02
 atmospheric stability class value                  - stab  =  6.0000E+00
 inverse monin-obukhov length (1/m)                 - ala   =  5.7143E-02
 surface roughness height (m)                       - z0    =  1.0000E-01


additional parameters

 sub-step multiplier                                - ncalc =           1
 number of calculational sub-steps                  - nssm  =           3
 acceleration of gravity (m/s2)                     - grav  =  9.8066E+00
 gas constant (j/mol- k)                            - rr    =  8.3143E+00
 von karman constant                                - xk    =  4.1000E-01
1
```

instantaneous spatially averaged cloud parameters

x	zc	h	bb	b	bbx	bx	cv	rho	t	u	ua
-7.78E+00	0.00E+00	0.00E+00	7.78E+00	7.78E+00	7.78E+00	7.78E+00	0.00E+00	1.12E+00	3.11E+02	0.00E+00	0.00E+00
-6.22E+00	0.00E+00	1.19E+00	7.84E+00	7.78E+00	8.83E+00	8.83E+00	2.89E-02	1.12E+00	3.08E+02	3.08E-01	3.30E-01
-4.67E+00	0.00E+00	1.57E+00	7.92E+00	7.78E+00	9.89E+00	9.89E+00	4.23E-02	1.11E+00	3.07E+02	3.16E-01	3.95E-01
-3.11E+00	0.00E+00	2.08E+00	8.06E+00	7.78E+00	1.10E+01	1.09E+01	5.19E-02	1.11E+00	3.06E+02	2.86E-01	4.69E-01
-1.56E+00	0.00E+00	3.17E+00	8.40E+00	7.78E+00	1.20E+01	1.20E+01	5.84E-02	1.11E+00	3.06E+02	2.13E-01	5.96E-01
6.66E-16	0.00E+00	3.20E+00	1.50E+01	7.78E+00	1.31E+01	1.31E+01	3.69E-02	1.12E+00	3.08E+02	2.35E-01	6.00E-01
1.56E+00	0.00E+00	1.31E+01	1.58E+01	7.78E+00	1.41E+01	1.41E+01	3.82E-02	1.12E+00	3.08E+02	6.33E-02	1.17E+00
3.11E+00	0.00E+00	1.33E+00	3.64E+01	7.77E+00	1.52E+01	1.52E+01	2.08E-02	1.12E+00	3.09E+02	5.78E-01	3.68E-01
4.67E+00	0.00E+00	1.71E+00	3.65E+01	7.78E+00	1.62E+01	1.62E+01	1.90E-02	1.12E+00	3.09E+02	5.62E-01	4.27E-01
6.22E+00	0.00E+00	2.00E+00	3.66E+01	7.78E+00	1.73E+01	1.73E+01	1.87E-02	1.12E+00	3.09E+02	5.49E-01	4.67E-01
7.78E+00	0.00E+00	2.25E+00	3.67E+01	7.79E+00	1.84E+01	1.84E+01	1.89E-02	1.12E+00	3.09E+02	5.34E-01	4.99E-01
7.91E+00	8.85E-04	2.30E+00	3.67E+01	7.79E+00	1.85E+01	1.85E+01	1.88E-02	1.12E+00	3.09E+02	5.26E-01	5.05E-01
8.06E+00	4.14E-03	2.31E+00	3.67E+01	7.79E+00	1.87E+01	1.87E+01	1.87E-02	1.12E+00	3.09E+02	5.27E-01	5.07E-01
8.24E+00	1.09E-02	2.33E+00	3.67E+01	7.79E+00	1.90E+01	1.90E+01	1.85E-02	1.12E+00	3.09E+02	5.28E-01	5.08E-01
8.46E+00	2.29E-02	2.34E+00	3.67E+01	7.79E+00	1.93E+01	1.93E+01	1.83E-02	1.12E+00	3.09E+02	5.30E-01	5.10E-01
8.70E+00	4.21E-02	2.36E+00	3.67E+01	7.79E+00	1.96E+01	1.96E+01	1.81E-02	1.12E+00	3.09E+02	5.32E-01	5.13E-01
8.99E+00	7.17E-02	2.38E+00	3.67E+01	7.79E+00	2.00E+01	2.00E+01	1.79E-02	1.12E+00	3.09E+02	5.34E-01	5.15E-01
9.33E+00	1.16E-01	2.41E+00	3.67E+01	7.79E+00	2.05E+01	2.05E+01	1.76E-02	1.12E+00	3.09E+02	5.37E-01	5.18E-01
9.73E+00	1.79E-01	2.44E+00	3.67E+01	7.78E+00	2.10E+01	2.10E+01	1.73E-02	1.12E+00	3.09E+02	5.40E-01	5.21E-01
1.02E+01	2.69E-01	2.47E+00	3.67E+01	7.78E+00	2.16E+01	2.16E+01	1.70E-02	1.12E+00	3.09E+02	5.43E-01	5.25E-01
1.07E+01	3.96E-01	2.50E+00	3.67E+01	7.78E+00	2.24E+01	2.24E+01	1.66E-02	1.12E+00	3.09E+02	5.47E-01	5.29E-01
1.14E+01	5.71E-01	2.54E+00	3.67E+01	7.78E+00	2.32E+01	2.32E+01	1.62E-02	1.12E+00	3.09E+02	5.51E-01	5.34E-01
1.21E+01	8.10E-01	2.59E+00	3.67E+01	7.78E+00	2.43E+01	2.43E+01	1.58E-02	1.12E+00	3.10E+02	5.55E-01	5.39E-01
1.30E+01	1.13E+00	2.64E+00	3.68E+01	7.77E+00	2.54E+01	2.54E+01	1.53E-02	1.12E+00	3.10E+02	5.61E-01	5.45E-01
1.40E+01	1.56E+00	2.66E+00	3.67E+01	7.76E+00	2.68E+01	2.68E+01	1.46E-02	1.12E+00	3.10E+02	5.87E-01	5.73E-01
1.52E+01	2.08E+00	2.62E+00	3.67E+01	7.74E+00	2.84E+01	2.84E+01	1.37E-02	1.12E+00	3.10E+02	6.36E-01	6.23E-01
1.66E+01	2.70E+00	2.55E+00	3.66E+01	7.72E+00	3.03E+01	3.03E+01	1.30E-02	1.12E+00	3.10E+02	6.89E-01	6.77E-01
1.82E+01	3.43E+00	2.48E+00	3.66E+01	7.70E+00	3.26E+01	3.26E+01	1.24E-02	1.12E+00	3.10E+02	7.45E-01	7.34E-01
2.01E+01	4.29E+00	2.40E+00	3.65E+01	7.68E+00	3.51E+01	3.51E+01	1.18E-02	1.12E+00	3.10E+02	8.05E-01	7.95E-01
2.24E+01	5.31E+00	2.32E+00	3.65E+01	7.66E+00	3.82E+01	3.82E+01	1.13E-02	1.12E+00	3.10E+02	8.69E-01	8.60E-01
2.50E+01	6.50E+00	2.25E+00	3.65E+01	7.64E+00	4.17E+01	4.17E+01	1.09E-02	1.12E+00	3.10E+02	9.37E-01	9.29E-01
2.80E+01	7.90E+00	2.18E+00	3.65E+01	7.63E+00	4.59E+01	4.59E+01	1.04E-02	1.12E+00	3.10E+02	1.01E+00	1.00E+00
3.16E+01	9.54E+00	2.12E+00	3.65E+01	7.61E+00	5.07E+01	5.07E+01	9.98E-03	1.12E+00	3.10E+02	1.08E+00	1.07E+00
3.58E+01	1.14E+01	2.07E+00	3.66E+01	7.60E+00	5.64E+01	5.64E+01	9.56E-03	1.12E+00	3.10E+02	1.16E+00	1.15E+00
4.07E+01	1.37E+01	2.02E+00	3.67E+01	7.59E+00	6.31E+01	6.31E+01	9.15E-03	1.12E+00	3.10E+02	1.23E+00	1.23E+00
4.64E+01	1.63E+01	1.98E+00	3.68E+01	7.57E+00	7.09E+01	7.09E+01	8.74E-03	1.12E+00	3.10E+02	1.31E+00	1.31E+00
5.31E+01	1.93E+01	1.95E+00	3.69E+01	7.56E+00	8.00E+01	8.00E+01	8.33E-03	1.12E+00	3.10E+02	1.39E+00	1.39E+00
6.09E+01	2.29E+01	1.93E+00	3.71E+01	7.55E+00	9.06E+01	9.06E+01	7.92E-03	1.12E+00	3.10E+02	1.48E+00	1.47E+00
7.01E+01	2.70E+01	1.91E+00	3.73E+01	7.54E+00	1.03E+02	1.03E+02	7.52E-03	1.12E+00	3.10E+02	1.56E+00	1.56E+00
8.08E+01	3.18E+01	1.90E+00	3.76E+01	7.53E+00	1.18E+02	1.18E+02	7.12E-03	1.12E+00	3.10E+02	1.64E+00	1.64E+00
9.33E+01	3.74E+01	1.90E+00	3.79E+01	7.52E+00	1.35E+02	1.35E+02	6.72E-03	1.12E+00	3.10E+02	1.73E+00	1.73E+00
1.08E+02	4.39E+01	1.91E+00	3.83E+01	7.51E+00	1.55E+02	1.55E+02	6.32E-03	1.12E+00	3.10E+02	1.81E+00	1.81E+00
1.25E+02	5.15E+01	1.92E+00	3.88E+01	7.50E+00	1.78E+02	1.78E+02	5.93E-03	1.12E+00	3.10E+02	1.90E+00	1.90E+00
1.45E+02	6.03E+01	1.94E+00	3.93E+01	7.50E+00	2.05E+02	2.05E+02	5.54E-03	1.12E+00	3.10E+02	1.98E+00	1.98E+00
1.69E+02	7.05E+01	1.96E+00	4.00E+01	7.49E+00	2.37E+02	2.37E+02	5.17E-03	1.12E+00	3.10E+02	2.06E+00	2.06E+00
1.96E+02	8.24E+01	2.00E+00	4.08E+01	7.48E+00	2.75E+02	2.75E+02	4.80E-03	1.12E+00	3.10E+02	2.14E+00	2.14E+00
2.28E+02	9.62E+01	2.03E+00	4.17E+01	7.48E+00	3.18E+02	3.18E+02	4.45E-03	1.12E+00	3.10E+02	2.22E+00	2.22E+00

2.66E+02	1.12E+02	2.07E+00	4.28E+01	7.48E+00	3.70E+02	3.70E+02	4.11E-03	1.12E+00	3.10E+02	2.30E+00	2.30E+00
3.10E+02	1.31E+02	2.11E+00	4.41E+01	7.48E+00	4.29E+02	4.29E+02	3.80E-03	1.12E+00	3.10E+02	2.37E+00	2.37E+00
3.62E+02	1.53E+02	2.15E+00	4.56E+01	7.48E+00	5.00E+02	4.99E+02	3.50E-03	1.12E+00	3.10E+02	2.44E+00	2.45E+00
4.22E+02	1.78E+02	2.18E+00	4.73E+01	7.48E+00	5.82E+02	5.81E+02	3.24E-03	1.12E+00	3.10E+02	2.51E+00	2.51E+00
4.92E+02	2.08E+02	2.20E+00	4.93E+01	7.48E+00	6.77E+02	6.77E+02	3.00E-03	1.12E+00	3.10E+02	2.57E+00	2.58E+00
5.75E+02	2.44E+02	2.19E+00	5.16E+01	7.48E+00	7.90E+02	7.90E+02	2.82E-03	1.12E+00	3.11E+02	2.63E+00	2.63E+00
6.72E+02	2.59E+02	2.20E+00	5.43E+01	7.48E+00	7.90E+02	7.90E+02	2.67E-03	1.12E+00	3.11E+02	2.65E+00	2.65E+00
7.86E+02	2.59E+02	2.20E+00	5.74E+01	7.48E+00	7.91E+02	7.90E+02	2.52E-03	1.12E+00	3.11E+02	2.65E+00	2.65E+00
9.19E+02	2.59E+02	2.20E+00	6.11E+01	7.48E+00	7.92E+02	7.90E+02	2.36E-03	1.12E+00	3.11E+02	2.65E+00	2.65E+00
1.07E+03	2.59E+02	2.20E+00	6.52E+01	7.48E+00	7.93E+02	7.90E+02	2.21E-03	1.12E+00	3.11E+02	2.65E+00	2.65E+00
1.26E+03	2.59E+02	2.20E+00	7.00E+01	7.48E+00	7.94E+02	7.90E+02	2.05E-03	1.12E+00	3.11E+02	2.65E+00	2.65E+00
1.47E+03	2.59E+02	2.21E+00	7.55E+01	7.48E+00	7.96E+02	7.90E+02	1.90E-03	1.12E+00	3.11E+02	2.65E+00	2.65E+00
1.72E+03	2.59E+02	2.21E+00	8.17E+01	7.48E+00	7.97E+02	7.90E+02	1.74E-03	1.12E+00	3.11E+02	2.65E+00	2.65E+00
2.01E+03	2.59E+02	2.22E+00	8.89E+01	7.48E+00	7.99E+02	7.90E+02	1.60E-03	1.12E+00	3.11E+02	2.65E+00	2.65E+00

1

x	cm	cmv	cmda	cmw	cmwv	wc	vg	ug	w	v	vx
-7.78E+00	0.00E+00	0.00E+00	9.78E-01	2.19E-02	2.19E-02	0.00E+00	0.00E+00	0.00E+00	9.92E-01	3.12E-02	0.00E+00
-6.22E+00	1.74E-02	1.74E-02	9.61E-01	2.15E-02	2.15E-02	0.00E+00	0.00E+00	0.00E+00	5.22E-02	6.83E-03	9.85E-02
-4.67E+00	2.56E-02	2.56E-02	9.53E-01	2.14E-02	2.14E-02	0.00E+00	0.00E+00	0.00E+00	4.05E-02	1.05E-02	1.12E-01
-3.11E+00	3.16E-02	3.16E-02	9.47E-01	2.12E-02	2.12E-02	0.00E+00	0.00E+00	0.00E+00	3.05E-02	1.86E-02	1.28E-01
-1.56E+00	3.56E-02	3.56E-02	9.43E-01	2.11E-02	2.11E-02	0.00E+00	0.00E+00	0.00E+00	2.66E-02	3.56E-02	1.56E-01
6.66E-16	2.23E-02	2.23E-02	9.56E-01	2.14E-02	2.14E-02	0.00E+00	0.00E+00	0.00E+00	2.27E-02	3.39E-02	1.57E-01
1.56E+00	2.31E-02	2.31E-02	9.55E-01	2.14E-02	2.14E-02	0.00E+00	0.00E+00	0.00E+00	4.36E-02	9.93E-02	2.70E-01
3.11E+00	1.25E-02	1.25E-02	9.66E-01	2.16E-02	2.16E-02	0.00E+00	0.00E+00	0.00E+00	9.10E-02	1.94E-02	1.04E-01
4.67E+00	1.14E-02	1.14E-02	9.67E-01	2.17E-02	2.17E-02	0.00E+00	0.00E+00	0.00E+00	5.84E-02	1.39E-02	1.17E-01
6.22E+00	1.12E-02	1.12E-02	9.67E-01	2.17E-02	2.17E-02	0.00E+00	0.00E+00	0.00E+00	4.40E-02	1.08E-02	1.26E-01
7.78E+00	1.14E-02	1.14E-02	9.67E-01	2.17E-02	2.17E-02	0.00E+00	0.00E+00	0.00E+00	3.52E-02	9.16E-03	1.33E-01
7.91E+00	1.13E-02	1.13E-02	9.67E-01	2.17E-02	2.17E-02	7.03E-03	0.00E+00	0.00E+00	3.45E-02	8.91E-03	1.35E-01
8.06E+00	1.12E-02	1.12E-02	9.67E-01	2.17E-02	2.17E-02	1.51E-02	0.00E+00	0.00E+00	3.42E-02	8.93E-03	1.35E-01
8.24E+00	1.11E-02	1.11E-02	9.67E-01	2.17E-02	2.17E-02	2.45E-02	0.00E+00	0.00E+00	3.39E-02	8.96E-03	1.36E-01
8.46E+00	1.10E-02	1.10E-02	9.67E-01	2.17E-02	2.17E-02	3.51E-02	0.00E+00	0.00E+00	3.35E-02	8.99E-03	1.37E-01
8.70E+00	1.09E-02	1.09E-02	9.67E-01	2.17E-02	2.17E-02	4.74E-02	0.00E+00	0.00E+00	3.31E-02	9.02E-03	1.39E-01
8.99E+00	1.07E-02	1.07E-02	9.68E-01	2.17E-02	2.17E-02	6.13E-02	0.00E+00	0.00E+00	3.25E-02	9.06E-03	1.42E-01
9.33E+00	1.06E-02	1.06E-02	9.68E-01	2.17E-02	2.17E-02	7.72E-02	0.00E+00	0.00E+00	3.20E-02	9.10E-03	1.45E-01
9.73E+00	1.04E-02	1.04E-02	9.68E-01	2.17E-02	2.17E-02	9.51E-02	0.00E+00	0.00E+00	3.13E-02	9.15E-03	1.49E-01
1.02E+01	1.02E-02	1.02E-02	9.68E-01	2.17E-02	2.17E-02	1.15E-01	0.00E+00	0.00E+00	3.06E-02	9.21E-03	1.55E-01
1.07E+01	9.97E-03	9.97E-03	9.68E-01	2.17E-02	2.17E-02	1.38E-01	0.00E+00	0.00E+00	2.99E-02	9.27E-03	1.63E-01
1.14E+01	9.73E-03	9.73E-03	9.69E-01	2.17E-02	2.17E-02	1.64E-01	0.00E+00	0.00E+00	2.91E-02	9.34E-03	1.72E-01
1.21E+01	9.48E-03	9.48E-03	9.69E-01	2.17E-02	2.17E-02	1.92E-01	0.00E+00	0.00E+00	2.84E-02	9.42E-03	1.84E-01
1.30E+01	9.20E-03	9.20E-03	9.69E-01	2.17E-02	2.17E-02	2.23E-01	0.00E+00	0.00E+00	2.76E-02	9.51E-03	1.97E-01
1.40E+01	8.74E-03	8.74E-03	9.70E-01	2.17E-02	2.17E-02	2.53E-01	0.00E+00	0.00E+00	5.49E-02	9.97E-03	2.15E-01
1.52E+01	8.21E-03	8.21E-03	9.70E-01	2.17E-02	2.17E-02	2.79E-01	0.00E+00	0.00E+00	4.18E-02	1.08E-02	2.35E-01
1.66E+01	7.78E-03	7.78E-03	9.70E-01	2.18E-02	2.18E-02	3.07E-01	0.00E+00	0.00E+00	3.32E-02	1.17E-02	2.53E-01
1.82E+01	7.42E-03	7.42E-03	9.71E-01	2.18E-02	2.18E-02	3.36E-01	0.00E+00	0.00E+00	2.73E-02	1.27E-02	2.70E-01
2.01E+01	7.09E-03	7.09E-03	9.71E-01	2.18E-02	2.18E-02	3.66E-01	0.00E+00	0.00E+00	2.30E-02	1.38E-02	2.85E-01
2.24E+01	6.79E-03	6.79E-03	9.71E-01	2.18E-02	2.18E-02	3.97E-01	0.00E+00	0.00E+00	1.98E-02	1.49E-02	2.99E-01
2.50E+01	6.50E-03	6.50E-03	9.72E-01	2.18E-02	2.18E-02	4.29E-01	0.00E+00	0.00E+00	1.73E-02	1.61E-02	3.11E-01
2.80E+01	6.23E-03	6.23E-03	9.72E-01	2.18E-02	2.18E-02	4.62E-01	0.00E+00	0.00E+00	1.53E-02	1.73E-02	3.21E-01
3.16E+01	5.97E-03	5.97E-03	9.72E-01	2.18E-02	2.18E-02	4.95E-01	0.00E+00	0.00E+00	1.36E-02	1.86E-02	3.29E-01
3.58E+01	5.72E-03	5.72E-03	9.72E-01	2.18E-02	2.18E-02	5.29E-01	0.00E+00	0.00E+00	1.23E-02	1.99E-02	3.35E-01
4.07E+01	5.47E-03	5.47E-03	9.73E-01	2.18E-02	2.18E-02	5.63E-01	0.00E+00	0.00E+00	1.11E-02	2.12E-02	3.40E-01

4.64E+01	5.22E-03	5.22E-03	9.73E-01	2.18E-02	2.18E-02	5.98E-01	0.00E+00	0.00E+00	1.02E-02	2.26E-02	3.43E-01
5.31E+01	4.98E-03	4.98E-03	9.73E-01	2.18E-02	2.18E-02	6.33E-01	0.00E+00	0.00E+00	9.35E-03	2.40E-02	3.45E-01
6.09E+01	4.74E-03	4.74E-03	9.73E-01	2.18E-02	2.18E-02	6.67E-01	0.00E+00	0.00E+00	8.61E-03	2.54E-02	3.45E-01
7.01E+01	4.49E-03	4.49E-03	9.74E-01	2.18E-02	2.18E-02	7.02E-01	0.00E+00	0.00E+00	7.96E-03	2.68E-02	3.43E-01
8.08E+01	4.25E-03	4.25E-03	9.74E-01	2.18E-02	2.18E-02	7.36E-01	0.00E+00	0.00E+00	7.37E-03	2.83E-02	3.40E-01
9.33E+01	4.01E-03	4.01E-03	9.74E-01	2.18E-02	2.18E-02	7.70E-01	0.00E+00	0.00E+00	6.83E-03	2.97E-02	3.34E-01
1.08E+02	3.78E-03	3.78E-03	9.74E-01	2.18E-02	2.18E-02	8.02E-01	0.00E+00	0.00E+00	6.32E-03	3.11E-02	3.27E-01
1.25E+02	3.54E-03	3.54E-03	9.75E-01	2.18E-02	2.18E-02	8.34E-01	0.00E+00	0.00E+00	5.84E-03	3.25E-02	3.18E-01
1.45E+02	3.31E-03	3.31E-03	9.75E-01	2.18E-02	2.18E-02	8.65E-01	0.00E+00	0.00E+00	5.37E-03	3.38E-02	3.06E-01
1.69E+02	3.09E-03	3.09E-03	9.75E-01	2.19E-02	2.19E-02	8.94E-01	0.00E+00	0.00E+00	4.92E-03	3.51E-02	2.92E-01
1.96E+02	2.87E-03	2.87E-03	9.75E-01	2.19E-02	2.19E-02	9.22E-01	0.00E+00	0.00E+00	4.46E-03	3.64E-02	2.74E-01
2.28E+02	2.66E-03	2.66E-03	9.75E-01	2.19E-02	2.19E-02	9.49E-01	0.00E+00	0.00E+00	3.99E-03	3.76E-02	2.54E-01
2.66E+02	2.45E-03	2.45E-03	9.76E-01	2.19E-02	2.19E-02	9.76E-01	0.00E+00	0.00E+00	3.51E-03	3.87E-02	2.30E-01
3.10E+02	2.27E-03	2.27E-03	9.76E-01	2.19E-02	2.19E-02	1.00E+00	0.00E+00	0.00E+00	3.00E-03	3.97E-02	2.01E-01
3.62E+02	2.09E-03	2.09E-03	9.76E-01	2.19E-02	2.19E-02	1.03E+00	0.00E+00	0.00E+00	2.45E-03	4.06E-02	1.68E-01
4.22E+02	1.93E-03	1.93E-03	9.76E-01	2.19E-02	2.19E-02	1.06E+00	0.00E+00	0.00E+00	1.84E-03	4.14E-02	1.28E-01
4.92E+02	1.79E-03	1.79E-03	9.76E-01	2.19E-02	2.19E-02	1.10E+00	0.00E+00	0.00E+00	1.15E-03	4.21E-02	8.13E-02
5.75E+02	1.68E-03	1.68E-03	9.76E-01	2.19E-02	2.19E-02	1.15E+00	0.00E+00	0.00E+00	3.61E-04	4.26E-02	2.53E-02
6.72E+02	1.59E-03	1.59E-03	9.77E-01	2.19E-02	2.19E-02	1.22E+00	0.00E+00	0.00E+00	2.42E-05	4.24E-02	1.03E-02
7.86E+02	1.50E-03	1.50E-03	9.77E-01	2.19E-02	2.19E-02	1.30E+00	0.00E+00	0.00E+00	2.43E-05	4.18E-02	1.03E-02
9.19E+02	1.41E-03	1.41E-03	9.77E-01	2.19E-02	2.19E-02	1.37E+00	0.00E+00	0.00E+00	2.43E-05	4.12E-02	1.03E-02
1.07E+03	1.32E-03	1.32E-03	9.77E-01	2.19E-02	2.19E-02	1.44E+00	0.00E+00	0.00E+00	2.43E-05	4.05E-02	1.03E-02
1.26E+03	1.22E-03	1.22E-03	9.77E-01	2.19E-02	2.19E-02	1.51E+00	0.00E+00	0.00E+00	2.43E-05	3.97E-02	1.03E-02
1.47E+03	1.13E-03	1.13E-03	9.77E-01	2.19E-02	2.19E-02	1.58E+00	0.00E+00	0.00E+00	2.44E-05	3.89E-02	1.03E-02
1.72E+03	1.04E-03	1.04E-03	9.77E-01	2.19E-02	2.19E-02	1.64E+00	0.00E+00	0.00E+00	2.44E-05	3.80E-02	1.02E-02
2.01E+03	9.52E-04	9.52E-04	9.77E-01	2.19E-02	2.19E-02	1.70E+00	0.00E+00	0.00E+00	2.45E-05	3.70E-02	1.02E-02

1

time averaged (tav = 1800. s) volume concentration: concentration contour parameters

c(x,y,z,t) = cc(x) * (erf(xa)-erf(xb)) * (erf(ya)-erf(yb)) * (exp(-za*za)+exp(-zb*zb))

```
c(x,y,z,t) = concentration (volume fraction) at (x,y,z,t)
         x = downwind distance (m)
         y = crosswind horizontal distance (m)
         z = height (m)
         t = time (s)

       erf = error functon
        xa = (x-xc+bx)/(sr2*betax)
        xb = (x-xc-bx)/(sr2*betax)
        ya = (y+b)/(sr2*betac)
        yb = (y-b)/(sr2*betac)
       exp = exponential function
        za = (z-zc)/(sr2*sig)
        zb = (z+zc)/(sr2*sig)
       sr2 = sqrt(2.0)
```

x	cc(x)	b(x)	betac(x)	zc(x)	sig(x)	t	xc(t)	bx(t)	betax(t)
-7.78E+00	0.00E+00	7.78E+00	6.35E-02	0.00E+00	0.00E+00	3.29E+01	0.00E+00	7.78E+00	6.35E-02
-6.22E+00	5.04E-03	7.78E+00	5.87E-01	0.00E+00	6.87E-01	3.78E+01	7.78E-01	8.83E+00	7.21E-02
-4.67E+00	7.44E-03	7.78E+00	8.73E-01	0.00E+00	9.05E-01	4.27E+01	1.56E+00	9.89E+00	8.08E-02

-3.11E+00	9.29E-03	7.78E+00	1.24E+00	0.00E+00	1.20E+00
-1.56E+00	1.09E-02	7.78E+00	1.84E+00	0.00E+00	1.83E+00
6.66E-16	1.23E-02	7.78E+00	7.40E+00	0.00E+00	1.85E+00
1.56E+00	1.34E-02	7.78E+00	7.93E+00	0.00E+00	7.55E+00
3.11E+00	1.69E-02	7.77E+00	2.05E+01	0.00E+00	7.69E-01
4.67E+00	1.54E-02	7.78E+00	2.06E+01	0.00E+00	9.89E-01
6.22E+00	1.52E-02	7.78E+00	2.06E+01	0.00E+00	1.15E+00
7.78E+00	1.54E-02	7.79E+00	2.07E+01	0.00E+00	1.30E+00
7.91E+00	1.53E-02	7.79E+00	2.07E+01	8.85E-04	1.33E+00
8.06E+00	1.52E-02	7.79E+00	2.07E+01	4.14E-03	1.33E+00
8.24E+00	1.51E-02	7.79E+00	2.07E+01	1.09E-02	1.34E+00
8.46E+00	1.51E-02	7.79E+00	2.07E+01	2.29E-02	1.34E+00
8.70E+00	1.50E-02	7.79E+00	2.07E+01	4.21E-02	1.34E+00
8.99E+00	1.50E-02	7.79E+00	2.07E+01	7.17E-02	1.33E+00
9.33E+00	1.51E-02	7.79E+00	2.07E+01	1.16E-01	1.32E+00
9.73E+00	1.52E-02	7.78E+00	2.07E+01	1.79E-01	1.30E+00
1.02E+01	1.55E-02	7.78E+00	2.07E+01	2.69E-01	1.27E+00
1.07E+01	1.61E-02	7.78E+00	2.07E+01	3.96E-01	1.22E+00
1.14E+01	1.71E-02	7.78E+00	2.07E+01	5.71E-01	1.14E+00
1.21E+01	1.88E-02	7.78E+00	2.07E+01	8.10E-01	1.03E+00
1.30E+01	2.20E-02	7.77E+00	2.08E+01	1.13E+00	8.71E-01
1.40E+01	2.38E-02	7.76E+00	2.07E+01	1.56E+00	7.68E-01
1.52E+01	2.24E-02	7.74E+00	2.07E+01	2.08E+00	7.55E-01
1.66E+01	2.13E-02	7.72E+00	2.07E+01	2.70E+00	7.37E-01
1.82E+01	2.03E-02	7.70E+00	2.07E+01	3.43E+00	7.15E-01
2.01E+01	1.95E-02	7.68E+00	2.06E+01	4.29E+00	6.93E-01
2.24E+01	1.87E-02	7.66E+00	2.06E+01	5.31E+00	6.71E-01
2.50E+01	1.80E-02	7.64E+00	2.06E+01	6.50E+00	6.50E-01
2.80E+01	1.73E-02	7.63E+00	2.07E+01	7.90E+00	6.30E-01
3.16E+01	1.66E-02	7.61E+00	2.07E+01	9.54E+00	6.12E-01
3.58E+01	1.60E-02	7.60E+00	2.07E+01	1.14E+01	5.97E-01
4.07E+01	1.54E-02	7.59E+00	2.08E+01	1.37E+01	5.83E-01
4.64E+01	1.47E-02	7.57E+00	2.09E+01	1.63E+01	5.72E-01
5.31E+01	1.42E-02	7.56E+00	2.10E+01	1.93E+01	5.63E-01
6.09E+01	1.36E-02	7.55E+00	2.12E+01	2.29E+01	5.56E-01
7.01E+01	1.30E-02	7.54E+00	2.14E+01	2.70E+01	5.51E-01
8.08E+01	1.25E-02	7.53E+00	2.16E+01	3.18E+01	5.49E-01
9.33E+01	1.19E-02	7.52E+00	2.19E+01	3.74E+01	5.48E-01
1.08E+02	1.14E-02	7.51E+00	2.22E+01	4.39E+01	5.50E-01
1.25E+02	1.09E-02	7.50E+00	2.27E+01	5.15E+01	5.54E-01
1.45E+02	1.04E-02	7.50E+00	2.32E+01	6.03E+01	5.59E-01
1.69E+02	1.00E-02	7.49E+00	2.38E+01	7.05E+01	5.67E-01
1.96E+02	9.61E-03	7.48E+00	2.46E+01	8.24E+01	5.76E-01
2.28E+02	9.25E-03	7.48E+00	2.56E+01	9.62E+01	5.86E-01
2.66E+02	8.94E-03	7.48E+00	2.68E+01	1.12E+02	5.97E-01
3.10E+02	8.69E-03	7.48E+00	2.83E+01	1.31E+02	6.09E-01
3.62E+02	8.50E-03	7.48E+00	3.00E+01	1.53E+02	6.20E-01
4.22E+02	8.40E-03	7.48E+00	3.21E+01	1.78E+02	6.29E-01
4.92E+02	8.39E-03	7.48E+00	3.46E+01	2.08E+02	6.34E-01
5.75E+02	8.54E-03	7.48E+00	3.76E+01	2.44E+02	6.32E-01
6.72E+02	8.85E-03	7.48E+00	4.12E+01	2.59E+02	6.34E-01
7.86E+02	9.20E-03	7.48E+00	4.54E+01	2.59E+02	6.34E-01

4.85E+01	2.33E+00	1.09E+01	8.94E-02
5.44E+01	3.11E+00	1.20E+01	9.80E-02
5.65E+01	3.89E+00	1.31E+01	1.07E-01
5.85E+01	4.67E+00	1.41E+01	1.15E-01
6.09E+01	5.44E+00	1.52E+01	1.24E-01
6.33E+01	6.22E+00	1.62E+01	1.33E-01
6.61E+01	7.00E+00	1.73E+01	1.41E-01
6.88E+01	7.78E+00	1.84E+01	1.50E-01
6.93E+01	7.91E+00	1.85E+01	1.51E-01
6.99E+01	8.06E+00	1.87E+01	1.53E-01
7.06E+01	8.24E+00	1.90E+01	1.55E-01
7.14E+01	8.46E+00	1.93E+01	1.57E-01
7.23E+01	8.70E+00	1.96E+01	1.60E-01
7.34E+01	8.99E+00	2.00E+01	1.63E-01
7.47E+01	9.33E+00	2.05E+01	1.67E-01
7.61E+01	9.73E+00	2.10E+01	1.72E-01
7.79E+01	1.02E+01	2.16E+01	1.77E-01
7.99E+01	1.07E+01	2.24E+01	1.83E-01
8.22E+01	1.14E+01	2.32E+01	1.90E-01
8.49E+01	1.21E+01	2.43E+01	1.98E-01
8.80E+01	1.30E+01	2.54E+01	2.08E-01
9.15E+01	1.40E+01	2.68E+01	2.19E-01
9.54E+01	1.52E+01	2.84E+01	2.32E-01
9.96E+01	1.66E+01	3.03E+01	2.48E-01
1.04E+02	1.82E+01	3.26E+01	2.66E-01
1.09E+02	2.01E+01	3.51E+01	2.87E-01
1.14E+02	2.24E+01	3.82E+01	3.12E-01
1.20E+02	2.50E+01	4.17E+01	3.41E-01
1.26E+02	2.80E+01	4.59E+01	3.75E-01
1.33E+02	3.16E+01	5.07E+01	4.14E-01
1.41E+02	3.58E+01	5.64E+01	4.61E-01
1.49E+02	4.07E+01	6.31E+01	5.15E-01
1.58E+02	4.64E+01	7.09E+01	5.79E-01
1.68E+02	5.31E+01	8.00E+01	6.53E-01
1.79E+02	6.09E+01	9.06E+01	7.40E-01
1.91E+02	7.01E+01	1.03E+02	8.42E-01
2.04E+02	8.08E+01	1.18E+02	9.61E-01
2.19E+02	9.33E+01	1.35E+02	1.10E+00
2.36E+02	1.08E+02	1.55E+02	1.26E+00
2.54E+02	1.25E+02	1.78E+02	1.45E+00
2.75E+02	1.45E+02	2.05E+02	1.68E+00
2.98E+02	1.69E+02	2.37E+02	1.94E+00
3.24E+02	1.96E+02	2.75E+02	2.24E+00
3.54E+02	2.28E+02	3.18E+02	2.60E+00
3.87E+02	2.66E+02	3.70E+02	3.02E+00
4.24E+02	3.10E+02	4.29E+02	3.51E+00
4.67E+02	3.62E+02	4.99E+02	4.08E+00
5.16E+02	4.22E+02	5.81E+02	4.75E+00
5.71E+02	4.92E+02	6.77E+02	5.53E+00
6.35E+02	5.75E+02	7.90E+02	6.45E+00
6.37E+02	6.72E+02	7.90E+02	2.17E+01
6.80E+02	7.86E+02	7.90E+02	2.96E+01

9.19E+02	9.58E-03	7.48E+00	5.03E+01	2.59E+02	6.35E-01	7.30E+02	9.19E+02	7.90E+02	3.67E+01
1.07E+03	9.97E-03	7.48E+00	5.60E+01	2.59E+02	6.36E-01	7.88E+02	1.07E+03	7.90E+02	4.36E+01
1.26E+03	1.04E-02	7.48E+00	6.27E+01	2.59E+02	6.36E-01	8.57E+02	1.26E+03	7.90E+02	5.05E+01
1.47E+03	1.08E-02	7.48E+00	7.03E+01	2.59E+02	6.37E-01	9.37E+02	1.47E+03	7.90E+02	5.75E+01
1.72E+03	1.12E-02	7.48E+00	7.91E+01	2.59E+02	6.39E-01	1.03E+03	1.72E+03	7.90E+02	6.47E+01
2.01E+03	1.15E-02	7.48E+00	8.91E+01	2.59E+02	6.40E-01	1.14E+03	2.01E+03	7.90E+02	7.23E+01

1

time averaged (tav = 1800. s) volume concentration: concentration in the z = 1.50 plane.

downwind distance x (m)	time of max conc (s)	cloud duration (s)	effective half width bbc (m)	average concentration (volume fraction) at (x,y,z) y/bbc= 0.0	y/bbc= 0.5	y/bbc= 1.0	y/bbc= 1.5	y/bbc= 2.0	y/bbc= 2.5
-7.78E+00	3.04E+02	6.00E+02	7.78E+00	0.00E+00	0.00E+00	0.00E+00	0.00E+00	0.00E+00	0.00E+00
-6.22E+00	3.03E+02	6.00E+02	7.84E+00	1.23E-03	1.23E-03	5.62E-04	6.50E-15	0.00E+00	0.00E+00
-4.67E+00	3.02E+02	6.00E+02	7.92E+00	5.02E-03	5.02E-03	2.18E-03	6.35E-09	0.00E+00	0.00E+00
-3.11E+00	3.02E+02	6.00E+02	8.07E+00	1.13E-02	1.13E-02	4.61E-03	2.69E-06	8.14E-14	0.00E+00
-1.56E+00	3.01E+02	6.00E+02	8.41E+00	2.07E-02	2.02E-02	7.59E-03	9.02E-05	9.65E-09	6.82E-15
6.66E-16	3.00E+02	6.00E+02	1.50E+01	1.66E-02	1.17E-02	3.85E-03	5.50E-04	3.16E-05	7.01E-07
1.56E+00	3.01E+02	6.00E+02	1.58E+01	2.35E-02	1.64E-02	5.41E-03	7.85E-04	4.71E-05	1.13E-06
3.11E+00	3.02E+02	6.00E+02	3.64E+01	1.98E-03	1.36E-03	4.42E-04	6.77E-05	4.87E-06	1.64E-07
4.67E+00	3.02E+02	6.00E+02	3.65E+01	3.83E-03	2.63E-03	8.55E-04	1.31E-04	9.42E-06	3.17E-07
6.22E+00	3.03E+02	6.00E+02	3.66E+01	5.11E-03	3.51E-03	1.14E-03	1.75E-04	1.26E-05	4.24E-07
7.78E+00	3.04E+02	6.00E+02	3.67E+01	6.18E-03	4.25E-03	1.38E-03	2.11E-04	1.52E-05	5.13E-07
7.91E+00	3.04E+02	6.00E+02	3.67E+01	6.32E-03	4.35E-03	1.41E-03	2.16E-04	1.56E-05	5.24E-07
8.06E+00	3.04E+02	6.00E+02	3.67E+01	6.32E-03	4.34E-03	1.41E-03	2.16E-04	1.55E-05	5.24E-07
8.24E+00	3.04E+02	6.00E+02	3.67E+01	6.30E-03	4.33E-03	1.41E-03	2.16E-04	1.55E-05	5.23E-07
8.46E+00	3.04E+02	6.00E+02	3.67E+01	6.29E-03	4.32E-03	1.40E-03	2.15E-04	1.55E-05	5.21E-07
8.70E+00	3.05E+02	6.00E+02	3.67E+01	6.26E-03	4.31E-03	1.40E-03	2.14E-04	1.54E-05	5.19E-07
8.99E+00	3.05E+02	6.00E+02	3.67E+01	6.23E-03	4.28E-03	1.39E-03	2.13E-04	1.53E-05	5.17E-07
9.33E+00	3.05E+02	6.00E+02	3.67E+01	6.19E-03	4.26E-03	1.38E-03	2.12E-04	1.52E-05	5.13E-07
9.73E+00	3.05E+02	6.00E+02	3.67E+01	6.14E-03	4.22E-03	1.37E-03	2.10E-04	1.51E-05	5.09E-07
1.02E+01	3.05E+02	6.00E+02	3.67E+01	6.08E-03	4.18E-03	1.36E-03	2.08E-04	1.50E-05	5.04E-07
1.07E+01	3.06E+02	6.00E+02	3.67E+01	6.02E-03	4.14E-03	1.35E-03	2.06E-04	1.48E-05	5.00E-07
1.14E+01	3.06E+02	6.00E+02	3.68E+01	6.04E-03	4.16E-03	1.35E-03	2.07E-04	1.49E-05	5.01E-07
1.21E+01	3.06E+02	6.00E+02	3.68E+01	6.42E-03	4.41E-03	1.43E-03	2.20E-04	1.58E-05	5.32E-07
1.30E+01	3.07E+02	6.00E+02	3.68E+01	7.91E-03	5.44E-03	1.77E-03	2.71E-04	1.95E-05	6.56E-07
1.40E+01	3.07E+02	6.00E+02	3.68E+01	9.24E-03	6.35E-03	2.06E-03	3.16E-04	2.27E-05	7.67E-07
1.52E+01	3.08E+02	6.00E+02	3.67E+01	6.49E-03	4.46E-03	1.45E-03	2.22E-04	1.60E-05	5.38E-07
1.66E+01	3.09E+02	6.00E+02	3.66E+01	2.21E-03	1.52E-03	4.95E-04	7.57E-05	5.45E-06	1.84E-07
1.82E+01	3.10E+02	6.00E+02	3.66E+01	2.10E-04	1.45E-04	4.70E-05	7.19E-06	5.18E-07	1.74E-08
2.01E+01	3.11E+02	6.00E+02	3.66E+01	2.29E-06	1.58E-06	5.12E-07	7.84E-08	5.65E-09	1.90E-10
2.24E+01	3.12E+02	6.00E+02	3.66E+01	7.45E-10	5.12E-10	1.66E-10	2.55E-11	1.83E-12	6.18E-14
2.50E+01	3.13E+02	6.00E+02	3.66E+01	9.66E-16	6.64E-16	2.16E-16	3.30E-17	2.38E-18	8.02E-20
2.80E+01	3.15E+02	6.00E+02	3.66E+01	2.72E-25	1.87E-25	6.08E-26	9.31E-27	6.70E-28	2.26E-29
3.16E+01	3.16E+02	6.00E+02	3.67E+01	2.65E-40	1.82E-40	5.91E-41	9.05E-42	6.52E-43	2.20E-44
3.58E+01	3.19E+02	6.00E+02	3.67E+01	2.75E-63	1.89E-63	6.14E-64	9.40E-65	6.77E-66	2.28E-67
4.07E+01	3.21E+02	6.00E+02	3.68E+01	1.10E-97	7.58E-98	2.46E-98	3.77E-99	2.71-100	9.16-102
4.64E+01	3.24E+02	6.00E+02	3.70E+01	3.86-148	2.66-148	8.63-149	1.32-149	9.52-151	3.21-152
5.31E+01	3.28E+02	6.00E+02	3.72E+01	7.94-221	5.46-221	1.77-221	2.72-222	1.96-223	6.61-225
6.09E+01	3.32E+02	6.00E+02	3.74E+01	9.88-324	4.94-324	0.00E+00	0.00E+00	0.00E+00	0.00E+00

7.01E+01	3.37E+02	6.00E+02	3.78E+01	0.00E+00	0.00E+00	0.00E+00	0.00E+00	0.00E+00	0.00E+00
8.08E+01	3.42E+02	6.00E+02	3.81E+01	0.00E+00	0.00E+00	0.00E+00	0.00E+00	0.00E+00	0.00E+00
9.33E+01	3.49E+02	6.00E+02	3.86E+01	0.00E+00	0.00E+00	0.00E+00	0.00E+00	0.00E+00	0.00E+00
1.08E+02	3.56E+02	6.00E+02	3.92E+01	0.00E+00	0.00E+00	0.00E+00	0.00E+00	0.00E+00	0.00E+00
1.25E+02	3.65E+02	6.00E+02	4.00E+01	0.00E+00	0.00E+00	0.00E+00	0.00E+00	0.00E+00	0.00E+00
1.45E+02	3.76E+02	6.00E+02	4.09E+01	0.00E+00	0.00E+00	0.00E+00	0.00E+00	0.00E+00	0.00E+00
1.69E+02	3.88E+02	6.00E+02	4.20E+01	0.00E+00	0.00E+00	0.00E+00	0.00E+00	0.00E+00	0.00E+00
1.96E+02	4.02E+02	6.00E+02	4.33E+01	0.00E+00	0.00E+00	0.00E+00	0.00E+00	0.00E+00	0.00E+00
2.28E+02	4.19E+02	6.00E+02	4.50E+01	0.00E+00	0.00E+00	0.00E+00	0.00E+00	0.00E+00	0.00E+00
2.66E+02	4.39E+02	6.00E+02	4.70E+01	0.00E+00	0.00E+00	0.00E+00	0.00E+00	0.00E+00	0.00E+00
3.10E+02	4.62E+02	6.00E+02	4.95E+01	0.00E+00	0.00E+00	0.00E+00	0.00E+00	0.00E+00	0.00E+00
3.62E+02	4.89E+02	6.00E+02	5.25E+01	0.00E+00	0.00E+00	0.00E+00	0.00E+00	0.00E+00	0.00E+00
4.22E+02	5.20E+02	6.00E+02	5.61E+01	0.00E+00	0.00E+00	0.00E+00	0.00E+00	0.00E+00	0.00E+00
4.92E+02	5.57E+02	6.00E+02	6.05E+01	0.00E+00	0.00E+00	0.00E+00	0.00E+00	0.00E+00	0.00E+00
5.75E+02	6.00E+02	6.00E+02	6.56E+01	0.00E+00	0.00E+00	0.00E+00	0.00E+00	0.00E+00	0.00E+00
6.72E+02	6.37E+02	6.00E+02	7.17E+01	0.00E+00	0.00E+00	0.00E+00	0.00E+00	0.00E+00	0.00E+00
7.86E+02	6.80E+02	6.00E+02	7.90E+01	0.00E+00	0.00E+00	0.00E+00	0.00E+00	0.00E+00	0.00E+00
9.19E+02	7.30E+02	6.00E+02	8.74E+01	0.00E+00	0.00E+00	0.00E+00	0.00E+00	0.00E+00	0.00E+00
1.07E+03	7.88E+02	6.00E+02	9.73E+01	0.00E+00	0.00E+00	0.00E+00	0.00E+00	0.00E+00	0.00E+00
1.26E+03	8.57E+02	6.00E+02	1.09E+02	0.00E+00	0.00E+00	0.00E+00	0.00E+00	0.00E+00	0.00E+00
1.47E+03	9.37E+02	6.00E+02	1.22E+02	0.00E+00	0.00E+00	0.00E+00	0.00E+00	0.00E+00	0.00E+00
1.72E+03	1.03E+03	6.01E+02	1.37E+02	0.00E+00	0.00E+00	0.00E+00	0.00E+00	0.00E+00	0.00E+00
2.01E+03	1.14E+03	6.03E+02	1.55E+02	0.00E+00	0.00E+00	0.00E+00	0.00E+00	0.00E+00	0.00E+00

1

time averaged (tav = 1800. s) volume concentration: maximum concentration (volume fraction) along centerline.

downwind distance x (m)	height z (m)	maximum concentration c(x,0,z)	time of max conc (s)	cloud duration (s)
-7.78E+00	0.00E+00	0.00E+00	3.04E+02	6.00E+02
-6.22E+00	0.00E+00	1.34E-02	3.03E+02	6.00E+02
-4.67E+00	0.00E+00	1.98E-02	3.02E+02	6.00E+02
-3.11E+00	0.00E+00	2.48E-02	3.02E+02	6.00E+02
-1.56E+00	0.00E+00	2.90E-02	3.01E+02	6.00E+02
6.66E-16	0.00E+00	2.31E-02	3.00E+02	6.00E+02
1.56E+00	0.00E+00	2.40E-02	3.01E+02	6.00E+02
3.11E+00	0.00E+00	1.33E-02	3.02E+02	6.00E+02
4.67E+00	0.00E+00	1.21E-02	3.02E+02	6.00E+02
6.22E+00	0.00E+00	1.19E-02	3.03E+02	6.00E+02
7.78E+00	0.00E+00	1.20E-02	3.04E+02	6.00E+02
7.91E+00	0.00E+00	1.20E-02	3.04E+02	6.00E+02
8.06E+00	0.00E+00	1.19E-02	3.04E+02	6.00E+02
8.24E+00	0.00E+00	1.18E-02	3.04E+02	6.00E+02
8.46E+00	0.00E+00	1.18E-02	3.04E+02	6.00E+02
8.70E+00	0.00E+00	1.17E-02	3.05E+02	6.00E+02
8.99E+00	0.00E+00	1.17E-02	3.05E+02	6.00E+02
9.33E+00	0.00E+00	1.17E-02	3.05E+02	6.00E+02
9.73E+00	0.00E+00	1.18E-02	3.05E+02	6.00E+02
1.02E+01	0.00E+00	1.19E-02	3.05E+02	6.00E+02
1.07E+01	0.00E+00	1.19E-02	3.06E+02	6.00E+02

1.14E+01	0.00E+00	1.17E-02	3.06E+02	6.00E+02
1.21E+01	0.00E+00	1.07E-02	3.06E+02	6.00E+02
1.30E+01	1.04E+00	8.88E-03	3.07E+02	6.00E+02
1.40E+01	1.56E+00	9.27E-03	3.07E+02	6.00E+02
1.52E+01	2.08E+00	8.71E-03	3.08E+02	6.00E+02
1.66E+01	2.70E+00	8.26E-03	3.09E+02	6.00E+02
1.82E+01	3.43E+00	7.87E-03	3.10E+02	6.00E+02
2.01E+01	4.29E+00	7.52E-03	3.11E+02	6.00E+02
2.24E+01	5.31E+00	7.20E-03	3.12E+02	6.00E+02
2.50E+01	6.50E+00	6.90E-03	3.13E+02	6.00E+02
2.80E+01	7.90E+00	6.61E-03	3.15E+02	6.00E+02
3.16E+01	9.54E+00	6.33E-03	3.16E+02	6.00E+02
3.58E+01	1.14E+01	6.06E-03	3.19E+02	6.00E+02
4.07E+01	1.37E+01	5.79E-03	3.21E+02	6.00E+02
4.64E+01	1.63E+01	5.53E-03	3.24E+02	6.00E+02
5.31E+01	1.93E+01	5.26E-03	3.28E+02	6.00E+02
6.09E+01	2.29E+01	5.00E-03	3.32E+02	6.00E+02
7.01E+01	2.70E+01	4.73E-03	3.37E+02	6.00E+02
8.08E+01	3.18E+01	4.46E-03	3.42E+02	6.00E+02
9.33E+01	3.74E+01	4.20E-03	3.49E+02	6.00E+02
1.08E+02	4.39E+01	3.93E-03	3.56E+02	6.00E+02
1.25E+02	5.15E+01	3.66E-03	3.65E+02	6.00E+02
1.45E+02	6.03E+01	3.40E-03	3.76E+02	6.00E+02
1.69E+02	7.05E+01	3.13E-03	3.88E+02	6.00E+02
1.96E+02	8.24E+01	2.88E-03	4.02E+02	6.00E+02
2.28E+02	9.62E+01	2.62E-03	4.19E+02	6.00E+02
2.66E+02	1.12E+02	2.38E-03	4.39E+02	6.00E+02
3.10E+02	1.31E+02	2.15E-03	4.62E+02	6.00E+02
3.62E+02	1.53E+02	1.93E-03	4.89E+02	6.00E+02
4.22E+02	1.78E+02	1.74E-03	5.20E+02	6.00E+02
4.92E+02	2.08E+02	1.56E-03	5.57E+02	6.00E+02
5.75E+02	2.44E+02	1.41E-03	6.00E+02	6.00E+02
6.72E+02	2.59E+02	1.28E-03	6.37E+02	6.00E+02
7.86E+02	2.59E+02	1.16E-03	6.80E+02	6.00E+02
9.19E+02	2.59E+02	1.05E-03	7.30E+02	6.00E+02
1.07E+03	2.59E+02	9.38E-04	7.88E+02	6.00E+02
1.26E+03	2.59E+02	8.39E-04	8.57E+02	6.00E+02
1.47E+03	2.59E+02	7.47E-04	9.37E+02	6.00E+02
1.72E+03	2.59E+02	6.63E-04	1.03E+03	6.01E+02
2.01E+03	2.59E+02	5.87E-04	1.14E+03	6.03E+02

```
INPUT DATA FILE NAME :  C:\CALPINE\IEEC\TEMP\HOSE1.SLB
OUTPUT LIST FILE NAME : C:\CALPINE\IEEC\TEMP\HOSE1.LST
```

problem input

```
idspl =         1
ncalc =         1
wms   =  0.017031
cps   =   2093.65
tbp   =    239.70
cmed0 =      1.00
dhe   =  1370837.
cpsl  =   4956.39
rhosl =    639.00
spb   =   2132.50
spc   =    -32.98
ts    =    298.16
qs    =      0.00
as    =      0.37
tsd   =      600.
qtis  =      0.00
hs    =      0.00
tav   =   3600.00
xffm  =   2000.00
zp(1) =      1.50
zp(2) =      0.00
zp(3) =      0.00
zp(4) =      0.00
z0    =  0.100000
za    =     10.00
ua    =      3.00
ta    =    298.16
rh    =     50.00
stab  =      4.00
```

release gas properties

```
molecular weight of source gas (kg)          - wms  =  1.7031E-02
vapor heat capacity, const. p.  (j/kg-k)     - cps  =  2.0937E+03
temperature of source gas (k)                - ts   =  2.3970E+02
density of source gas (kg/m3)                - rhos =  8.6589E-01
boiling point temperature                    - tbp  =  2.3970E+02
liquid mass fraction                         - cmed0=  0.0000E+00
liquid heat capacity (j/kg-k)                - cpsl =  4.9564E+03
heat of vaporization (j/kg)                  - dhe  =  1.3708E+06
liquid source density (kg/m3)                - rhosl=  6.3900E+02
saturation pressure constant                 - spa  =  1.0316E+01
saturation pressure constant (k)             - spb  =  2.1325E+03
```

```
 saturation pressure constant (k)                    - spc   = -3.2980E+01

spill characteristics

 spill type                                          - idspl=           1
 mass source rate (kg/s)                             - qs    =  3.4800E-03
 continuous source duration (s)                      - tsd   =  6.0000E+02
 continuous source mass (kg)                         - qtcs  =  2.0880E+00
 instantaneous source mass (kg)                      - qtis  =  0.0000E+00
 source area (m2)                                    - as    =  3.7200E-01
 vertical vapor velocity (m/s)                       - ws    =  1.0804E-02
 source half width (m)                               - bs    =  3.0496E-01
 source height (m)                                   - hs    =  0.0000E+00
 horizontal vapor velocity (m/s)                     - us    =  0.0000E+00

field parameters

 concentration averaging time (s)                    - tav   =  3.6000E+03
 mixing layer height (m)                             - hmx   =  1.0400E+03
 maximum downwind distrace (m)                       - xffm  =  2.0000E+03
 concentration measurement height (m)                - zp(1) =  1.5000E+00
                                                     - zp(2) =  0.0000E+00
                                                     - zp(3) =  0.0000E+00
                                                     - zp(4) =  0.0000E+00

ambient meteorological properties

 molecular weight of ambient air (kg)                - wmae  =  2.8780E-02
 heat capacity of ambient air at const p. (j/kg-k)   - cpaa  =  1.0145E+03
 density of ambient air (kg/m3)                      - rhoa  =  1.1763E+00
 ambient measurement height (m)                      - za    =  1.0000E+01
 ambient atmospheric pressure (pa=n/m2=j/m3)         - pa    =  1.0133E+05
 ambient wind speed (m/s)                            - ua    =  3.0000E+00
 ambient temperature (k)                             - ta    =  2.9816E+02
 relative humidity (percent)                         - rh    =  5.0000E+01
 ambient friction velocity (m/s)                     - uastr =  2.6764E-01
 atmospheric stability class value                   - stab  =  4.0000E+00
 inverse monin-obukhov length (1/m)                  - ala   =  0.0000E+00
 surface roughness height (m)                        - z0    =  1.0000E-01

additional parameters

 sub-step multiplier                                 - ncalc =           1
 number of calculational sub-steps                   - nssm  =           3
 acceleration of gravity (m/s2)                      - grav  =  9.8066E+00
 gas constant (j/mol- k)                             - rr    =  8.3143E+00
 von karman constant                                 - xk    =  4.1000E-01
1
```

instantaneous spatially averaged cloud parameters

x	zc	h	bb	b	bbx	bx	cv	rho	t	u	ua
-3.05E-01	0.00E+00	0.00E+00	3.05E-01	3.05E-01	3.05E-01	3.05E-01	0.00E+00	1.18E+00	2.98E+02	0.00E+00	0.00E+00
-2.44E-01	0.00E+00	2.78E-01	3.12E-01	3.05E-01	3.36E-01	3.36E-01	8.70E-03	1.17E+00	2.98E+02	3.31E-01	3.34E-01
-1.83E-01	0.00E+00	3.56E-01	3.15E-01	3.05E-01	3.66E-01	3.66E-01	1.07E-02	1.17E+00	2.97E+02	4.18E-01	4.25E-01
-1.22E-01	0.00E+00	4.13E-01	3.19E-01	3.05E-01	3.97E-01	3.97E-01	1.19E-02	1.17E+00	2.97E+02	4.77E-01	4.88E-01
-6.10E-02	0.00E+00	4.62E-01	3.22E-01	3.05E-01	4.28E-01	4.28E-01	1.28E-02	1.17E+00	2.97E+02	5.22E-01	5.38E-01
7.63E-17	0.00E+00	5.05E-01	3.26E-01	3.05E-01	4.59E-01	4.59E-01	1.36E-02	1.17E+00	2.97E+02	5.58E-01	5.80E-01
6.10E-02	0.00E+00	5.44E-01	3.29E-01	3.05E-01	4.89E-01	4.89E-01	1.42E-02	1.17E+00	2.97E+02	5.89E-01	6.16E-01
1.22E-01	0.00E+00	5.81E-01	3.33E-01	3.05E-01	5.20E-01	5.20E-01	1.46E-02	1.17E+00	2.97E+02	6.16E-01	6.48E-01
1.83E-01	0.00E+00	6.16E-01	3.37E-01	3.05E-01	5.51E-01	5.51E-01	1.51E-02	1.17E+00	2.97E+02	6.39E-01	6.78E-01
2.44E-01	0.00E+00	6.48E-01	3.41E-01	3.05E-01	5.81E-01	5.81E-01	1.54E-02	1.17E+00	2.97E+02	6.59E-01	7.04E-01
3.05E-01	0.00E+00	6.80E-01	3.44E-01	3.05E-01	6.12E-01	6.12E-01	1.57E-02	1.17E+00	2.97E+02	6.77E-01	7.29E-01
3.13E-01	1.89E-06	6.85E-01	3.45E-01	3.05E-01	6.20E-01	6.20E-01	1.56E-02	1.17E+00	2.97E+02	6.78E-01	7.33E-01
3.22E-01	9.43E-06	6.89E-01	3.45E-01	3.05E-01	6.29E-01	6.29E-01	1.54E-02	1.17E+00	2.97E+02	6.82E-01	7.36E-01
3.34E-01	2.66E-05	6.93E-01	3.46E-01	3.05E-01	6.41E-01	6.41E-01	1.51E-02	1.17E+00	2.97E+02	6.86E-01	7.39E-01
3.49E-01	5.96E-05	6.97E-01	3.49E-01	3.05E-01	6.56E-01	6.56E-01	1.49E-02	1.17E+00	2.97E+02	6.90E-01	7.42E-01
3.67E-01	1.18E-04	7.02E-01	3.51E-01	3.05E-01	6.75E-01	6.75E-01	1.45E-02	1.17E+00	2.97E+02	6.96E-01	7.46E-01
3.90E-01	2.15E-04	7.09E-01	3.54E-01	3.05E-01	6.98E-01	6.98E-01	1.41E-02	1.17E+00	2.97E+02	7.03E-01	7.51E-01
4.19E-01	3.73E-04	7.17E-01	3.59E-01	3.05E-01	7.27E-01	7.27E-01	1.36E-02	1.17E+00	2.97E+02	7.11E-01	7.57E-01
4.54E-01	6.19E-04	7.27E-01	3.64E-01	3.05E-01	7.63E-01	7.63E-01	1.31E-02	1.17E+00	2.97E+02	7.20E-01	7.64E-01
4.99E-01	9.96E-04	7.40E-01	3.70E-01	3.05E-01	8.08E-01	8.08E-01	1.25E-02	1.17E+00	2.97E+02	7.32E-01	7.73E-01
5.55E-01	1.56E-03	7.55E-01	3.77E-01	3.05E-01	8.64E-01	8.64E-01	1.17E-02	1.17E+00	2.97E+02	7.46E-01	7.84E-01
6.24E-01	2.38E-03	7.74E-01	3.87E-01	3.05E-01	9.34E-01	9.34E-01	1.09E-02	1.17E+00	2.98E+02	7.62E-01	7.97E-01
7.11E-01	3.55E-03	7.97E-01	3.98E-01	3.05E-01	1.02E+00	1.02E+00	1.01E-02	1.17E+00	2.98E+02	7.82E-01	8.13E-01
8.20E-01	5.19E-03	8.25E-01	4.12E-01	3.05E-01	1.13E+00	1.13E+00	9.12E-03	1.17E+00	2.98E+02	8.04E-01	8.32E-01
9.55E-01	7.42E-03	8.59E-01	4.30E-01	3.05E-01	1.27E+00	1.27E+00	8.15E-03	1.17E+00	2.98E+02	8.30E-01	8.54E-01
1.12E+00	1.04E-02	9.01E-01	4.50E-01	3.05E-01	1.44E+00	1.44E+00	7.16E-03	1.17E+00	2.98E+02	8.60E-01	8.80E-01
1.34E+00	1.43E-02	9.51E-01	4.76E-01	3.05E-01	1.65E+00	1.65E+00	6.18E-03	1.17E+00	2.98E+02	8.94E-01	9.11E-01
1.60E+00	1.92E-02	1.01E+00	5.06E-01	3.05E-01	1.92E+00	1.92E+00	5.24E-03	1.17E+00	2.98E+02	9.31E-01	9.45E-01
1.93E+00	2.53E-02	1.08E+00	5.42E-01	3.05E-01	2.25E+00	2.25E+00	4.37E-03	1.18E+00	2.98E+02	9.73E-01	9.85E-01
2.34E+00	3.27E-02	1.17E+00	5.85E-01	3.05E-01	2.66E+00	2.66E+00	3.58E-03	1.18E+00	2.98E+02	1.02E+00	1.03E+00
2.85E+00	4.14E-02	1.27E+00	6.36E-01	3.05E-01	3.18E+00	3.18E+00	2.88E-03	1.18E+00	2.98E+02	1.07E+00	1.08E+00
3.49E+00	5.17E-02	1.39E+00	6.97E-01	3.05E-01	3.82E+00	3.82E+00	2.29E-03	1.18E+00	2.98E+02	1.13E+00	1.13E+00
4.29E+00	6.33E-02	1.54E+00	7.69E-01	3.05E-01	4.63E+00	4.63E+00	1.79E-03	1.18E+00	2.98E+02	1.18E+00	1.19E+00
5.29E+00	7.64E-02	1.71E+00	8.53E-01	3.05E-01	5.63E+00	5.63E+00	1.38E-03	1.18E+00	2.98E+02	1.25E+00	1.25E+00
6.53E+00	9.08E-02	1.91E+00	9.53E-01	3.05E-01	6.88E+00	6.88E+00	1.05E-03	1.18E+00	2.98E+02	1.32E+00	1.32E+00
8.08E+00	1.07E-01	2.14E+00	1.07E+00	3.05E-01	8.45E+00	8.45E+00	7.87E-04	1.18E+00	2.98E+02	1.39E+00	1.39E+00
1.00E+01	1.23E-01	2.42E+00	1.21E+00	3.05E-01	1.04E+01	1.04E+01	5.84E-04	1.18E+00	2.98E+02	1.46E+00	1.46E+00
1.24E+01	1.41E-01	2.75E+00	1.37E+00	3.05E-01	1.28E+01	1.28E+01	4.30E-04	1.18E+00	2.98E+02	1.54E+00	1.54E+00
1.55E+01	1.60E-01	3.14E+00	1.57E+00	3.05E-01	1.59E+01	1.59E+01	3.13E-04	1.18E+00	2.98E+02	1.62E+00	1.62E+00
1.92E+01	1.79E-01	3.60E+00	1.80E+00	3.05E-01	1.97E+01	1.97E+01	2.26E-04	1.18E+00	2.98E+02	1.71E+00	1.71E+00
2.39E+01	1.99E-01	4.15E+00	2.07E+00	3.05E-01	2.44E+01	2.44E+01	1.61E-04	1.18E+00	2.98E+02	1.80E+00	1.80E+00
2.98E+01	2.20E-01	4.80E+00	2.40E+00	3.05E-01	3.04E+01	3.04E+01	1.14E-04	1.18E+00	2.98E+02	1.89E+00	1.89E+00
3.72E+01	2.41E-01	5.56E+00	2.81E+00	3.05E-01	3.78E+01	3.77E+01	8.05E-05	1.18E+00	2.98E+02	1.98E+00	1.98E+00
4.63E+01	2.61E-01	6.44E+00	3.33E+00	3.05E-01	4.70E+01	4.70E+01	5.62E-05	1.18E+00	2.98E+02	2.08E+00	2.08E+00
5.78E+01	2.82E-01	7.46E+00	3.96E+00	3.05E-01	5.85E+01	5.85E+01	3.90E-05	1.18E+00	2.98E+02	2.17E+00	2.17E+00
7.20E+01	3.03E-01	8.65E+00	4.75E+00	3.05E-01	7.29E+01	7.29E+01	2.68E-05	1.18E+00	2.98E+02	2.27E+00	2.27E+00
8.99E+01	3.23E-01	1.00E+01	5.74E+00	3.05E-01	9.08E+01	9.08E+01	1.84E-05	1.18E+00	2.98E+02	2.36E+00	2.36E+00

1.12E+02	3.44E-01	1.17E+01	6.97E+00	3.05E-01	1.13E+02	1.13E+02	1.25E-05	1.18E+00	2.98E+02	2.46E+00	2.46E+00
1.40E+02	3.64E-01	1.36E+01	8.49E+00	3.05E-01	1.41E+02	1.41E+02	8.50E-06	1.18E+00	2.98E+02	2.55E+00	2.55E+00
1.75E+02	3.83E-01	1.58E+01	1.04E+01	3.05E-01	1.76E+02	1.76E+02	5.75E-06	1.18E+00	2.98E+02	2.65E+00	2.65E+00
2.18E+02	4.03E-01	1.84E+01	1.27E+01	3.05E-01	2.20E+02	2.20E+02	3.88E-06	1.18E+00	2.98E+02	2.75E+00	2.75E+00
2.72E+02	4.22E-01	2.15E+01	1.56E+01	3.05E-01	2.74E+02	2.74E+02	2.62E-06	1.18E+00	2.98E+02	2.85E+00	2.85E+00
3.39E+02	4.38E-01	2.51E+01	1.92E+01	3.05E-01	3.42E+02	3.42E+02	1.76E-06	1.18E+00	2.98E+02	2.95E+00	2.95E+00
4.24E+02	4.52E-01	2.93E+01	2.36E+01	3.05E-01	4.27E+02	4.27E+02	1.18E-06	1.18E+00	2.98E+02	3.05E+00	3.05E+00
5.29E+02	4.63E-01	3.43E+01	2.90E+01	3.05E-01	5.33E+02	5.33E+02	7.97E-07	1.18E+00	2.98E+02	3.15E+00	3.15E+00
6.60E+02	4.72E-01	4.02E+01	3.57E+01	3.05E-01	6.65E+02	6.65E+02	5.37E-07	1.18E+00	2.98E+02	3.25E+00	3.25E+00
8.24E+02	4.79E-01	4.71E+01	4.37E+01	3.05E-01	8.30E+02	8.30E+02	3.62E-07	1.18E+00	2.98E+02	3.35E+00	3.35E+00
1.03E+03	4.85E-01	5.53E+01	5.36E+01	3.05E-01	1.04E+03	1.04E+03	2.44E-07	1.18E+00	2.98E+02	3.45E+00	3.45E+00
1.29E+03	4.90E-01	6.68E+01	6.57E+01	3.05E-01	1.09E+03	1.04E+03	1.58E-07	1.18E+00	2.98E+02	3.57E+00	3.57E+00
1.62E+03	4.94E-01	8.06E+01	8.07E+01	3.05E-01	1.15E+03	1.04E+03	1.01E-07	1.18E+00	2.98E+02	3.69E+00	3.69E+00
2.06E+03	4.97E-01	9.71E+01	9.91E+01	3.05E-01	1.22E+03	1.04E+03	6.37E-08	1.18E+00	2.98E+02	3.81E+00	3.81E+00

1

x	cm	cmv	cmda	cmw	cmwv	wc	vg	ug	w	v	vx
-3.05E-01	0.00E+00	0.00E+00	9.90E-01	1.03E-02	1.03E-02	0.00E+00	0.00E+00	0.00E+00	7.47E-01	9.76E-02	0.00E+00
-2.44E-01	5.16E-03	5.16E-03	9.85E-01	1.03E-02	1.03E-02	0.00E+00	0.00E+00	0.00E+00	6.00E-01	1.09E-02	1.74E-01
-1.83E-01	6.33E-03	6.33E-03	9.83E-01	1.02E-02	1.02E-02	0.00E+00	0.00E+00	0.00E+00	4.82E-01	1.38E-02	1.98E-01
-1.22E-01	7.09E-03	7.09E-03	9.83E-01	1.02E-02	1.02E-02	0.00E+00	0.00E+00	0.00E+00	4.29E-01	1.59E-02	2.13E-01
-6.10E-02	7.64E-03	7.64E-03	9.82E-01	1.02E-02	1.02E-02	0.00E+00	0.00E+00	0.00E+00	3.96E-01	1.75E-02	2.24E-01
7.63E-17	8.07E-03	8.07E-03	9.82E-01	1.02E-02	1.02E-02	0.00E+00	0.00E+00	0.00E+00	3.72E-01	1.89E-02	2.32E-01
6.10E-02	8.43E-03	8.43E-03	9.81E-01	1.02E-02	1.02E-02	0.00E+00	0.00E+00	0.00E+00	3.53E-01	2.02E-02	2.39E-01
1.22E-01	8.72E-03	8.72E-03	9.81E-01	1.02E-02	1.02E-02	0.00E+00	0.00E+00	0.00E+00	3.38E-01	2.13E-02	2.45E-01
1.83E-01	8.96E-03	8.96E-03	9.81E-01	1.02E-02	1.02E-02	0.00E+00	0.00E+00	0.00E+00	3.26E-01	2.23E-02	2.51E-01
2.44E-01	9.17E-03	9.17E-03	9.81E-01	1.02E-02	1.02E-02	0.00E+00	0.00E+00	0.00E+00	3.15E-01	2.32E-02	2.55E-01
3.05E-01	9.35E-03	9.35E-03	9.80E-01	1.02E-02	1.02E-02	0.00E+00	0.00E+00	0.00E+00	3.05E-01	2.41E-02	2.59E-01
3.13E-01	9.26E-03	9.26E-03	9.81E-01	1.02E-02	1.02E-02	3.37E-04	0.00E+00	0.00E+00	3.04E-01	2.43E-02	2.60E-01
3.22E-01	9.15E-03	9.15E-03	9.81E-01	1.02E-02	1.02E-02	7.47E-04	0.00E+00	0.00E+00	3.03E-01	2.44E-02	2.61E-01
3.34E-01	9.01E-03	9.01E-03	9.81E-01	1.02E-02	1.02E-02	1.24E-03	0.00E+00	0.00E+00	3.02E-01	2.44E-02	2.61E-01
3.49E-01	8.84E-03	8.84E-03	9.81E-01	1.02E-02	1.02E-02	1.84E-03	0.00E+00	0.00E+00	3.01E-01	2.45E-02	2.62E-01
3.67E-01	8.64E-03	8.64E-03	9.81E-01	1.02E-02	1.02E-02	2.55E-03	0.00E+00	0.00E+00	2.99E-01	2.46E-02	2.62E-01
3.90E-01	8.40E-03	8.40E-03	9.81E-01	1.02E-02	1.02E-02	3.39E-03	0.00E+00	0.00E+00	2.98E-01	2.48E-02	2.63E-01
4.19E-01	8.12E-03	8.12E-03	9.82E-01	1.02E-02	1.02E-02	4.36E-03	0.00E+00	0.00E+00	2.96E-01	2.49E-02	2.64E-01
4.54E-01	7.79E-03	7.79E-03	9.82E-01	1.02E-02	1.02E-02	5.48E-03	0.00E+00	0.00E+00	2.94E-01	2.51E-02	2.65E-01
4.99E-01	7.41E-03	7.41E-03	9.82E-01	1.02E-02	1.02E-02	6.74E-03	0.00E+00	0.00E+00	2.92E-01	2.54E-02	2.67E-01
5.55E-01	6.98E-03	6.98E-03	9.83E-01	1.02E-02	1.02E-02	8.13E-03	0.00E+00	0.00E+00	2.89E-01	2.57E-02	2.69E-01
6.24E-01	6.50E-03	6.50E-03	9.83E-01	1.02E-02	1.02E-02	9.61E-03	0.00E+00	0.00E+00	2.86E-01	2.61E-02	2.71E-01
7.11E-01	5.98E-03	5.98E-03	9.84E-01	1.02E-02	1.02E-02	1.12E-02	0.00E+00	0.00E+00	2.83E-01	2.65E-02	2.74E-01
8.20E-01	5.42E-03	5.42E-03	9.84E-01	1.03E-02	1.03E-02	1.27E-02	0.00E+00	0.00E+00	2.79E-01	2.71E-02	2.77E-01
9.55E-01	4.84E-03	4.84E-03	9.85E-01	1.03E-02	1.03E-02	1.42E-02	0.00E+00	0.00E+00	2.75E-01	2.78E-02	2.81E-01
1.12E+00	4.25E-03	4.25E-03	9.85E-01	1.03E-02	1.03E-02	1.55E-02	0.00E+00	0.00E+00	2.71E-01	2.86E-02	2.85E-01
1.34E+00	3.67E-03	3.67E-03	9.86E-01	1.03E-02	1.03E-02	1.66E-02	0.00E+00	0.00E+00	2.66E-01	2.96E-02	2.90E-01
1.60E+00	3.11E-03	3.11E-03	9.87E-01	1.03E-02	1.03E-02	1.74E-02	0.00E+00	0.00E+00	2.60E-01	3.07E-02	2.95E-01
1.93E+00	2.59E-03	2.59E-03	9.87E-01	1.03E-02	1.03E-02	1.79E-02	0.00E+00	0.00E+00	2.54E-01	3.20E-02	3.01E-01
2.34E+00	2.12E-03	2.12E-03	9.88E-01	1.03E-02	1.03E-02	1.80E-02	0.00E+00	0.00E+00	2.47E-01	3.34E-02	3.07E-01
2.85E+00	1.71E-03	1.71E-03	9.88E-01	1.03E-02	1.03E-02	1.78E-02	0.00E+00	0.00E+00	2.39E-01	3.50E-02	3.13E-01
3.49E+00	1.35E-03	1.35E-03	9.88E-01	1.03E-02	1.03E-02	1.73E-02	0.00E+00	0.00E+00	2.31E-01	3.67E-02	3.19E-01
4.29E+00	1.06E-03	1.06E-03	9.89E-01	1.03E-02	1.03E-02	1.65E-02	0.00E+00	0.00E+00	2.23E-01	3.85E-02	3.25E-01
5.29E+00	8.15E-04	8.15E-04	9.89E-01	1.03E-02	1.03E-02	1.55E-02	0.00E+00	0.00E+00	2.14E-01	4.06E-02	3.31E-01
6.53E+00	6.20E-04	6.20E-04	9.89E-01	1.03E-02	1.03E-02	1.43E-02	0.00E+00	0.00E+00	2.06E-01	4.27E-02	3.37E-01

8.08E+00	4.66E-04	4.66E-04	9.89E-01	1.03E-02	1.03E-02	1.31E-02	0.00E+00	0.00E+00	1.98E-01	4.50E-02	3.42E-01
1.00E+01	3.46E-04	3.46E-04	9.89E-01	1.03E-02	1.03E-02	1.18E-02	0.00E+00	0.00E+00	1.91E-01	4.74E-02	3.47E-01
1.24E+01	2.54E-04	2.54E-04	9.89E-01	1.03E-02	1.03E-02	1.05E-02	0.00E+00	0.00E+00	1.83E-01	4.99E-02	3.52E-01
1.55E+01	1.85E-04	1.85E-04	9.90E-01	1.03E-02	1.03E-02	9.22E-03	0.00E+00	0.00E+00	1.76E-01	5.25E-02	3.56E-01
1.92E+01	1.34E-04	1.34E-04	9.90E-01	1.03E-02	1.03E-02	8.03E-03	0.00E+00	0.00E+00	1.69E-01	5.53E-02	3.60E-01
2.39E+01	9.55E-05	9.55E-05	9.90E-01	1.03E-02	1.03E-02	6.93E-03	0.00E+00	0.00E+00	1.63E-01	5.81E-02	3.64E-01
2.98E+01	6.77E-05	6.77E-05	9.90E-01	1.03E-02	1.03E-02	5.93E-03	0.00E+00	0.00E+00	1.56E-01	6.10E-02	3.67E-01
3.72E+01	4.76E-05	4.76E-05	9.90E-01	1.03E-02	1.03E-02	5.03E-03	0.00E+00	0.00E+00	1.51E-01	6.39E-02	3.70E-01
4.63E+01	3.33E-05	3.33E-05	9.90E-01	1.03E-02	1.03E-02	4.23E-03	0.00E+00	0.00E+00	1.45E-01	6.68E-02	3.73E-01
5.78E+01	2.31E-05	2.31E-05	9.90E-01	1.03E-02	1.03E-02	3.53E-03	0.00E+00	0.00E+00	1.40E-01	6.97E-02	3.75E-01
7.20E+01	1.59E-05	1.59E-05	9.90E-01	1.03E-02	1.03E-02	2.94E-03	0.00E+00	0.00E+00	1.35E-01	7.25E-02	3.77E-01
8.99E+01	1.09E-05	1.09E-05	9.90E-01	1.03E-02	1.03E-02	2.43E-03	0.00E+00	0.00E+00	1.31E-01	7.53E-02	3.78E-01
1.12E+02	7.41E-06	7.41E-06	9.90E-01	1.03E-02	1.03E-02	1.99E-03	0.00E+00	0.00E+00	1.26E-01	7.80E-02	3.80E-01
1.40E+02	5.03E-06	5.03E-06	9.90E-01	1.03E-02	1.03E-02	1.64E-03	0.00E+00	0.00E+00	1.22E-01	8.07E-02	3.81E-01
1.75E+02	3.41E-06	3.41E-06	9.90E-01	1.03E-02	1.03E-02	1.34E-03	0.00E+00	0.00E+00	1.18E-01	8.32E-02	3.82E-01
2.18E+02	2.30E-06	2.30E-06	9.90E-01	1.03E-02	1.03E-02	1.09E-03	0.00E+00	0.00E+00	1.15E-01	8.56E-02	3.83E-01
2.72E+02	1.55E-06	1.55E-06	9.90E-01	1.03E-02	1.03E-02	8.80E-04	0.00E+00	0.00E+00	1.11E-01	8.78E-02	3.83E-01
3.39E+02	1.04E-06	1.04E-06	9.90E-01	1.03E-02	1.03E-02	5.93E-04	0.00E+00	0.00E+00	1.08E-01	8.98E-02	3.84E-01
4.24E+02	7.01E-07	7.01E-07	9.90E-01	1.03E-02	1.03E-02	3.99E-04	0.00E+00	0.00E+00	1.04E-01	9.15E-02	3.84E-01
5.29E+02	4.72E-07	4.72E-07	9.90E-01	1.03E-02	1.03E-02	2.68E-04	0.00E+00	0.00E+00	1.01E-01	9.29E-02	3.84E-01
6.60E+02	3.18E-07	3.18E-07	9.90E-01	1.03E-02	1.03E-02	1.81E-04	0.00E+00	0.00E+00	9.79E-02	9.39E-02	3.84E-01
8.24E+02	2.14E-07	2.14E-07	9.90E-01	1.03E-02	1.03E-02	1.22E-04	0.00E+00	0.00E+00	9.48E-02	9.44E-02	3.84E-01
1.03E+03	1.45E-07	1.45E-07	9.90E-01	1.03E-02	1.03E-02	8.22E-05	0.00E+00	0.00E+00	9.17E-02	9.44E-02	3.83E-01
1.29E+03	9.32E-08	9.32E-08	9.90E-01	1.03E-02	1.03E-02	5.30E-05	0.00E+00	0.00E+00	8.81E-02	9.43E-02	3.83E-01
1.62E+03	5.96E-08	5.96E-08	9.90E-01	1.03E-02	1.03E-02	3.39E-05	0.00E+00	0.00E+00	8.46E-02	9.33E-02	3.82E-01
2.06E+03	3.77E-08	3.77E-08	9.90E-01	1.03E-02	1.03E-02	2.14E-05	0.00E+00	0.00E+00	8.11E-02	9.16E-02	3.80E-01

1

time averaged (tav = 3600. s) volume concentration: concentration contour parameters

c(x,y,z,t) = cc(x) * (erf(xa)-erf(xb)) * (erf(ya)-erf(yb)) * (exp(-za*za)+exp(-zb*zb))

```
c(x,y,z,t) = concentration (volume fraction) at (x,y,z,t)
         x = downwind distance (m)
         y = crosswind horizontal distance (m)
         z = height (m)
         t = time (s)

       erf = error functon
        xa = (x-xc+bx)/(sr2*betax)
        xb = (x-xc-bx)/(sr2*betax)
        ya = (y+b)/(sr2*betac)
        yb = (y-b)/(sr2*betac)
       exp = exponential function
        za = (z-zc)/(sr2*sig)
        zb = (z+zc)/(sr2*sig)
       sr2 = sqrt(2.0)
```

x	cc(x)	b(x)	betac(x)	zc(x)	sig(x)	t	xc(t)	bx(t)	betax(t)
-3.05E-01	0.00E+00	3.05E-01	2.49E-03	0.00E+00	0.00E+00	3.26E-01	0.00E+00	3.05E-01	2.49E-03
-2.44E-01	1.53E-03	3.05E-01	3.68E-02	0.00E+00	1.61E-01	3.84E-01	3.05E-02	3.36E-01	2.74E-03
-1.83E-01	1.90E-03	3.05E-01	4.62E-02	0.00E+00	2.05E-01	4.42E-01	6.10E-02	3.66E-01	2.99E-03

-1.22E-01	2.15E-03	3.05E-01	5.44E-02	0.00E+00	2.39E-01
-6.10E-02	2.35E-03	3.05E-01	6.19E-02	0.00E+00	2.67E-01
7.63E-17	2.52E-03	3.05E-01	6.90E-02	0.00E+00	2.91E-01
6.10E-02	2.66E-03	3.05E-01	7.57E-02	0.00E+00	3.14E-01
1.22E-01	2.79E-03	3.05E-01	8.21E-02	0.00E+00	3.35E-01
1.83E-01	2.91E-03	3.05E-01	8.84E-02	0.00E+00	3.55E-01
2.44E-01	3.02E-03	3.05E-01	9.45E-02	0.00E+00	3.74E-01
3.05E-01	3.12E-03	3.05E-01	1.01E-01	0.00E+00	3.93E-01
3.13E-01	3.10E-03	3.05E-01	1.01E-01	1.89E-06	3.96E-01
3.22E-01	3.07E-03	3.05E-01	1.02E-01	9.43E-06	3.98E-01
3.34E-01	3.03E-03	3.05E-01	1.04E-01	2.66E-05	4.00E-01
3.49E-01	3.00E-03	3.05E-01	1.06E-01	5.96E-05	4.02E-01
3.67E-01	2.95E-03	3.05E-01	1.10E-01	1.18E-04	4.05E-01
3.90E-01	2.90E-03	3.05E-01	1.14E-01	2.15E-04	4.09E-01
4.19E-01	2.84E-03	3.05E-01	1.19E-01	3.73E-04	4.14E-01
4.54E-01	2.77E-03	3.05E-01	1.25E-01	6.19E-04	4.19E-01
4.99E-01	2.69E-03	3.05E-01	1.32E-01	9.96E-04	4.26E-01
5.55E-01	2.60E-03	3.05E-01	1.40E-01	1.56E-03	4.35E-01
6.24E-01	2.49E-03	3.05E-01	1.50E-01	2.38E-03	4.45E-01
7.11E-01	2.37E-03	3.05E-01	1.62E-01	3.55E-03	4.58E-01
8.20E-01	2.25E-03	3.05E-01	1.77E-01	5.19E-03	4.73E-01
9.55E-01	2.11E-03	3.05E-01	1.94E-01	7.42E-03	4.92E-01
1.12E+00	1.97E-03	3.05E-01	2.13E-01	1.04E-02	5.14E-01
1.34E+00	1.82E-03	3.05E-01	2.37E-01	1.43E-02	5.41E-01
1.60E+00	1.67E-03	3.05E-01	2.65E-01	1.92E-02	5.73E-01
1.93E+00	1.52E-03	3.05E-01	2.98E-01	2.53E-02	6.11E-01
2.34E+00	1.37E-03	3.05E-01	3.37E-01	3.27E-02	6.57E-01
2.85E+00	1.24E-03	3.05E-01	3.84E-01	4.14E-02	7.11E-01
3.49E+00	1.10E-03	3.05E-01	4.41E-01	5.17E-02	7.75E-01
4.29E+00	9.83E-04	3.05E-01	5.08E-01	6.33E-02	8.51E-01
5.29E+00	8.71E-04	3.05E-01	5.90E-01	7.64E-02	9.41E-01
6.53E+00	7.68E-04	3.05E-01	6.90E-01	9.08E-02	1.05E+00
8.08E+00	6.75E-04	3.05E-01	8.12E-01	1.07E-01	1.17E+00
1.00E+01	5.91E-04	3.05E-01	9.61E-01	1.23E-01	1.33E+00
1.24E+01	5.15E-04	3.05E-01	1.14E+00	1.41E-01	1.50E+00
1.55E+01	4.47E-04	3.05E-01	1.37E+00	1.60E-01	1.72E+00
1.92E+01	3.87E-04	3.05E-01	1.65E+00	1.79E-01	1.97E+00
2.39E+01	3.33E-04	3.05E-01	1.99E+00	1.99E-01	2.28E+00
2.98E+01	2.86E-04	3.05E-01	2.42E+00	2.20E-01	2.65E+00
3.72E+01	2.44E-04	3.05E-01	2.95E+00	2.41E-01	3.07E+00
4.63E+01	2.08E-04	3.05E-01	3.62E+00	2.61E-01	3.57E+00
5.78E+01	1.77E-04	3.05E-01	4.45E+00	2.82E-01	4.14E+00
7.20E+01	1.50E-04	3.05E-01	5.49E+00	3.03E-01	4.82E+00
8.99E+01	1.26E-04	3.05E-01	6.78E+00	3.23E-01	5.61E+00
1.12E+02	1.06E-04	3.05E-01	8.39E+00	3.44E-01	6.53E+00
1.40E+02	8.91E-05	3.05E-01	1.04E+01	3.64E-01	7.62E+00
1.75E+02	7.45E-05	3.05E-01	1.29E+01	3.83E-01	8.89E+00
2.18E+02	6.21E-05	3.05E-01	1.59E+01	4.03E-01	1.04E+01
2.72E+02	5.17E-05	3.05E-01	1.97E+01	4.22E-01	1.21E+01
3.39E+02	4.30E-05	3.05E-01	2.44E+01	4.38E-01	1.42E+01
4.24E+02	3.57E-05	3.05E-01	3.02E+01	4.52E-01	1.67E+01
5.29E+02	2.96E-05	3.05E-01	3.73E+01	4.63E-01	1.95E+01

5.08E-01	9.15E-02	3.97E-01	3.24E-03
5.74E-01	1.22E-01	4.28E-01	3.49E-03
6.47E-01	1.52E-01	4.59E-01	3.74E-03
7.20E-01	1.83E-01	4.89E-01	4.00E-03
8.00E-01	2.13E-01	5.20E-01	4.25E-03
8.80E-01	2.44E-01	5.51E-01	4.50E-03
9.67E-01	2.74E-01	5.81E-01	4.75E-03
1.05E+00	3.05E-01	6.12E-01	5.00E-03
1.08E+00	3.13E-01	6.20E-01	5.06E-03
1.10E+00	3.22E-01	6.29E-01	5.14E-03
1.14E+00	3.34E-01	6.41E-01	5.24E-03
1.18E+00	3.49E-01	6.56E-01	5.36E-03
1.23E+00	3.67E-01	6.75E-01	5.51E-03
1.30E+00	3.90E-01	6.98E-01	5.70E-03
1.38E+00	4.19E-01	7.27E-01	5.93E-03
1.48E+00	4.54E-01	7.63E-01	6.23E-03
1.60E+00	4.99E-01	8.08E-01	6.59E-03
1.75E+00	5.55E-01	8.64E-01	7.05E-03
1.94E+00	6.24E-01	9.34E-01	7.63E-03
2.16E+00	7.11E-01	1.02E+00	8.34E-03
2.44E+00	8.20E-01	1.13E+00	9.23E-03
2.77E+00	9.55E-01	1.27E+00	1.03E-02
3.17E+00	1.12E+00	1.44E+00	1.17E-02
3.65E+00	1.34E+00	1.65E+00	1.35E-02
4.23E+00	1.60E+00	1.92E+00	1.56E-02
4.92E+00	1.93E+00	2.25E+00	1.83E-02
5.74E+00	2.34E+00	2.66E+00	2.17E-02
6.72E+00	2.85E+00	3.18E+00	2.59E-02
7.89E+00	3.49E+00	3.82E+00	3.12E-02
9.27E+00	4.29E+00	4.63E+00	3.78E-02
1.09E+01	5.29E+00	5.63E+00	4.60E-02
1.28E+01	6.53E+00	6.88E+00	5.62E-02
1.51E+01	8.08E+00	8.45E+00	6.90E-02
1.79E+01	1.00E+01	1.04E+01	8.49E-02
2.11E+01	1.24E+01	1.28E+01	1.05E-01
2.49E+01	1.55E+01	1.59E+01	1.30E-01
2.94E+01	1.92E+01	1.97E+01	1.61E-01
3.48E+01	2.39E+01	2.44E+01	1.99E-01
4.12E+01	2.98E+01	3.04E+01	2.48E-01
4.87E+01	3.72E+01	3.77E+01	3.08E-01
5.78E+01	4.63E+01	4.70E+01	3.84E-01
6.85E+01	5.78E+01	5.85E+01	4.78E-01
8.14E+01	7.20E+01	7.29E+01	5.95E-01
9.68E+01	8.99E+01	9.08E+01	7.42E-01
1.15E+02	1.12E+02	1.13E+02	9.25E-01
1.37E+02	1.40E+02	1.41E+02	1.15E+00
1.64E+02	1.75E+02	1.76E+02	1.44E+00
1.96E+02	2.18E+02	2.20E+02	1.79E+00
2.35E+02	2.72E+02	2.74E+02	2.24E+00
2.81E+02	3.39E+02	3.42E+02	2.79E+00
3.37E+02	4.24E+02	4.27E+02	3.49E+00
4.05E+02	5.29E+02	5.33E+02	4.35E+00

6.60E+02	2.45E-05	3.05E-01	4.60E+01	4.72E-01	2.29E+01	4.87E+02	6.60E+02	6.65E+02	5.43E+00
8.24E+02	2.03E-05	3.05E-01	5.66E+01	4.79E-01	2.69E+01	5.86E+02	8.24E+02	8.30E+02	6.78E+00
1.03E+03	1.68E-05	3.05E-01	6.95E+01	4.85E-01	3.16E+01	7.06E+02	1.03E+03	1.04E+03	8.46E+00
1.29E+03	1.40E-05	3.05E-01	8.56E+01	4.90E-01	3.83E+01	6.74E+02	1.29E+03	1.04E+03	1.87E+02
1.62E+03	1.16E-05	3.05E-01	1.06E+02	4.94E-01	4.62E+01	7.66E+02	1.62E+03	1.04E+03	2.83E+02
2.06E+03	9.72E-06	3.05E-01	1.31E+02	4.97E-01	5.58E+01	8.81E+02	2.06E+03	1.04E+03	3.75E+02

1

time averaged (tav = 3600. s) volume concentration: concentration in the z = 1.50 plane.

downwind distance x (m)	time of max conc (s)	cloud duration (s)	effective half width bbc (m)	average concentration (volume fraction) at (x,y,z) y/bbc= 0.0	y/bbc= 0.5	y/bbc= 1.0	y/bbc= 1.5	y/bbc= 2.0	y/bbc= 2.5
-3.05E-01	3.00E+02	6.00E+02	3.05E-01	0.00E+00	0.00E+00	0.00E+00	0.00E+00	0.00E+00	0.00E+00
-2.44E-01	3.00E+02	6.00E+02	3.12E-01	2.33E-22	2.33E-22	1.00E-22	1.21E-27	0.00E+00	0.00E+00
-1.83E-01	3.00E+02	6.00E+02	3.15E-01	6.51E-15	6.51E-15	2.68E-15	9.02E-19	5.88E-27	0.00E+00
-1.22E-01	3.00E+02	6.00E+02	3.19E-01	7.47E-12	7.45E-12	2.97E-12	5.22E-15	3.29E-21	0.00E+00
-6.10E-02	3.00E+02	6.00E+02	3.23E-01	4.18E-10	4.13E-10	1.60E-10	7.62E-13	7.14E-18	9.27E-26
7.63E-17	3.00E+02	6.00E+02	3.28E-01	5.93E-09	5.81E-09	2.20E-09	2.04E-11	1.13E-15	2.67E-22
6.10E-02	3.00E+02	6.00E+02	3.32E-01	3.97E-08	3.84E-08	1.43E-08	2.13E-10	4.13E-14	7.78E-20
1.22E-01	3.00E+02	6.00E+02	3.37E-01	1.67E-07	1.59E-07	5.86E-08	1.25E-09	6.13E-13	5.36E-18
1.83E-01	3.00E+02	6.00E+02	3.41E-01	5.17E-07	4.85E-07	1.76E-07	4.97E-09	4.99E-12	1.42E-16
2.44E-01	3.00E+02	6.00E+02	3.46E-01	1.29E-06	1.19E-06	4.29E-07	1.51E-08	2.67E-11	1.93E-15
3.05E-01	3.00E+02	6.00E+02	3.51E-01	2.76E-06	2.49E-06	8.92E-07	3.77E-08	1.05E-10	1.62E-14
3.13E-01	3.00E+02	6.00E+02	3.52E-01	3.04E-06	2.74E-06	9.83E-07	4.24E-08	1.25E-10	2.08E-14
3.22E-01	3.00E+02	6.00E+02	3.53E-01	3.25E-06	2.92E-06	1.04E-06	4.62E-08	1.45E-10	2.67E-14
3.34E-01	3.00E+02	6.00E+02	3.54E-01	3.49E-06	3.12E-06	1.12E-06	5.13E-08	1.77E-10	3.86E-14
3.49E-01	3.00E+02	6.00E+02	3.57E-01	3.75E-06	3.33E-06	1.18E-06	5.83E-08	2.38E-10	6.83E-14
3.67E-01	3.00E+02	6.00E+02	3.60E-01	4.09E-06	3.59E-06	1.27E-06	6.76E-08	3.34E-10	1.30E-13
3.90E-01	3.00E+02	6.00E+02	3.63E-01	4.53E-06	3.93E-06	1.39E-06	8.02E-08	4.87E-10	2.66E-13
4.19E-01	3.00E+02	6.00E+02	3.68E-01	5.12E-06	4.38E-06	1.54E-06	9.74E-08	7.39E-10	5.81E-13
4.54E-01	3.00E+02	6.00E+02	3.74E-01	5.92E-06	4.98E-06	1.75E-06	1.21E-07	1.16E-09	1.34E-12
4.99E-01	3.00E+02	6.00E+02	3.81E-01	7.00E-06	5.78E-06	2.02E-06	1.54E-07	1.88E-09	3.20E-12
5.55E-01	3.00E+02	6.00E+02	3.90E-01	8.48E-06	6.85E-06	2.38E-06	2.01E-07	3.10E-09	7.82E-12
6.24E-01	3.00E+02	6.00E+02	4.01E-01	1.05E-05	8.31E-06	2.87E-06	2.67E-07	5.20E-09	1.92E-11
7.11E-01	3.00E+02	6.00E+02	4.15E-01	1.33E-05	1.03E-05	3.54E-06	3.60E-07	8.73E-09	4.62E-11
8.20E-01	3.00E+02	6.00E+02	4.32E-01	1.72E-05	1.30E-05	4.44E-06	4.90E-07	1.46E-08	1.08E-10
9.55E-01	3.00E+02	6.00E+02	4.53E-01	2.25E-05	1.66E-05	5.64E-06	6.71E-07	2.40E-08	2.39E-10
1.12E+00	3.00E+02	6.00E+02	4.79E-01	2.96E-05	2.15E-05	7.23E-06	9.16E-07	3.84E-08	4.98E-10
1.34E+00	3.00E+02	6.00E+02	5.11E-01	3.87E-05	2.77E-05	9.24E-06	1.23E-06	5.92E-08	9.64E-10
1.60E+00	3.00E+02	6.00E+02	5.51E-01	4.99E-05	3.53E-05	1.17E-05	1.63E-06	8.74E-08	1.72E-09
1.93E+00	3.01E+02	6.00E+02	5.99E-01	6.28E-05	4.40E-05	1.45E-05	2.09E-06	1.22E-07	2.79E-09
2.34E+00	3.01E+02	6.00E+02	6.59E-01	7.64E-05	5.31E-05	1.75E-05	2.57E-06	1.61E-07	4.15E-09
2.85E+00	3.01E+02	6.00E+02	7.32E-01	8.90E-05	6.17E-05	2.02E-05	3.01E-06	1.98E-07	5.60E-09
3.49E+00	3.01E+02	6.00E+02	8.22E-01	9.88E-05	6.82E-05	2.22E-05	3.36E-06	2.29E-07	6.91E-09
4.29E+00	3.01E+02	6.00E+02	9.32E-01	1.04E-04	7.16E-05	2.33E-05	3.54E-06	2.47E-07	7.82E-09
5.29E+00	3.02E+02	6.00E+02	1.07E+00	1.03E-04	7.11E-05	2.31E-05	3.53E-06	2.50E-07	8.16E-09
6.53E+00	3.02E+02	6.00E+02	1.23E+00	9.73E-05	6.69E-05	2.17E-05	3.33E-06	2.38E-07	7.92E-09
8.08E+00	3.02E+02	6.00E+02	1.44E+00	8.69E-05	5.98E-05	1.94E-05	2.97E-06	2.14E-07	7.21E-09
1.00E+01	3.03E+02	6.00E+02	1.69E+00	7.39E-05	5.08E-05	1.65E-05	2.53E-06	1.83E-07	6.20E-09
1.24E+01	3.04E+02	6.00E+02	2.00E+00	6.01E-05	4.13E-05	1.34E-05	2.06E-06	1.49E-07	5.07E-09

1.55E+01	3.05E+02	6.00E+02	2.39E+00	4.70E-05	3.23E-05	1.05E-05	1.61E-06	1.16E-07	3.97E-09
1.92E+01	3.06E+02	6.00E+02	2.87E+00	3.55E-05	2.44E-05	7.91E-06	1.21E-06	8.78E-08	3.00E-09
2.39E+01	3.07E+02	6.00E+02	3.46E+00	2.60E-05	1.78E-05	5.79E-06	8.89E-07	6.44E-08	2.20E-09
2.98E+01	3.09E+02	6.00E+02	4.20E+00	1.86E-05	1.28E-05	4.14E-06	6.35E-07	4.60E-08	1.57E-09
3.72E+01	3.11E+02	6.00E+02	5.12E+00	1.30E-05	8.95E-06	2.91E-06	4.46E-07	3.23E-08	1.10E-09
4.63E+01	3.14E+02	6.00E+02	6.28E+00	9.02E-06	6.20E-06	2.01E-06	3.09E-07	2.24E-08	7.65E-10
5.78E+01	3.17E+02	6.00E+02	7.72E+00	6.18E-06	4.25E-06	1.38E-06	2.12E-07	1.53E-08	5.24E-10
7.20E+01	3.21E+02	6.00E+02	9.51E+00	4.21E-06	2.89E-06	9.39E-07	1.44E-07	1.04E-08	3.57E-10
8.99E+01	3.26E+02	6.00E+02	1.17E+01	2.84E-06	1.96E-06	6.35E-07	9.73E-08	7.05E-09	2.41E-10
1.12E+02	3.33E+02	6.00E+02	1.45E+01	1.92E-06	1.32E-06	4.27E-07	6.55E-08	4.75E-09	1.62E-10
1.40E+02	3.41E+02	6.00E+02	1.80E+01	1.29E-06	8.84E-07	2.87E-07	4.40E-08	3.19E-09	1.09E-10
1.75E+02	3.51E+02	6.00E+02	2.23E+01	8.61E-07	5.92E-07	1.92E-07	2.95E-08	2.13E-09	7.31E-11
2.18E+02	3.64E+02	6.00E+02	2.76E+01	5.76E-07	3.96E-07	1.29E-07	1.97E-08	1.43E-09	4.89E-11
2.72E+02	3.79E+02	6.00E+02	3.42E+01	3.85E-07	2.65E-07	8.59E-08	1.32E-08	9.55E-10	3.27E-11
3.39E+02	3.99E+02	6.00E+02	4.23E+01	2.57E-07	1.77E-07	5.74E-08	8.81E-09	6.38E-10	2.18E-11
4.24E+02	4.24E+02	6.00E+02	5.23E+01	1.72E-07	1.18E-07	3.84E-08	5.89E-09	4.26E-10	1.46E-11
5.29E+02	4.54E+02	6.00E+02	6.46E+01	1.15E-07	7.91E-08	2.57E-08	3.94E-09	2.85E-10	9.76E-12
6.60E+02	4.93E+02	6.00E+02	7.97E+01	7.71E-08	5.30E-08	1.72E-08	2.64E-09	1.91E-10	6.54E-12
8.24E+02	5.40E+02	6.00E+02	9.81E+01	5.18E-08	3.56E-08	1.16E-08	1.77E-09	1.28E-10	4.39E-12
1.03E+03	6.00E+02	6.00E+02	1.20E+02	3.49E-08	2.40E-08	7.78E-09	1.19E-09	8.64E-11	2.96E-12
1.29E+03	6.74E+02	6.07E+02	1.48E+02	2.26E-08	1.56E-08	5.05E-09	7.75E-10	5.61E-11	1.92E-12
1.62E+03	7.66E+02	6.21E+02	1.83E+02	1.47E-08	1.01E-08	3.28E-09	5.02E-10	3.64E-11	1.25E-12
2.06E+03	8.81E+02	6.42E+02	2.27E+02	9.53E-09	6.55E-09	2.13E-09	3.26E-10	2.36E-11	8.08E-13

1

time averaged (tav = 3600. s) volume concentration: maximum concentration (volume fraction) along centerline.

downwind distance x (m)	height z (m)	maximum concentration c(x,0,z)	time of max conc (s)	cloud duration (s)
-3.05E-01	0.00E+00	0.00E+00	3.00E+02	6.00E+02
-2.44E-01	0.00E+00	2.05E-03	3.00E+02	6.00E+02
-1.83E-01	0.00E+00	2.53E-03	3.00E+02	6.00E+02
-1.22E-01	0.00E+00	2.87E-03	3.00E+02	6.00E+02
-6.10E-02	0.00E+00	3.12E-03	3.00E+02	6.00E+02
7.63E-17	0.00E+00	3.34E-03	3.00E+02	6.00E+02
6.10E-02	0.00E+00	3.52E-03	3.00E+02	6.00E+02
1.22E-01	0.00E+00	3.68E-03	3.00E+02	6.00E+02
1.83E-01	0.00E+00	3.82E-03	3.00E+02	6.00E+02
2.44E-01	0.00E+00	3.95E-03	3.00E+02	6.00E+02
3.05E-01	0.00E+00	4.07E-03	3.00E+02	6.00E+02
3.13E-01	0.00E+00	4.04E-03	3.00E+02	6.00E+02
3.22E-01	0.00E+00	3.99E-03	3.00E+02	6.00E+02
3.34E-01	0.00E+00	3.94E-03	3.00E+02	6.00E+02
3.49E-01	0.00E+00	3.89E-03	3.00E+02	6.00E+02
3.67E-01	0.00E+00	3.83E-03	3.00E+02	6.00E+02
3.90E-01	0.00E+00	3.75E-03	3.00E+02	6.00E+02
4.19E-01	0.00E+00	3.66E-03	3.00E+02	6.00E+02
4.54E-01	0.00E+00	3.54E-03	3.00E+02	6.00E+02
4.99E-01	0.00E+00	3.41E-03	3.00E+02	6.00E+02
5.55E-01	0.00E+00	3.25E-03	3.00E+02	6.00E+02

6.24E-01	0.00E+00	3.07E-03	3.00E+02	6.00E+02
7.11E-01	0.00E+00	2.85E-03	3.00E+02	6.00E+02
8.20E-01	0.00E+00	2.62E-03	3.00E+02	6.00E+02
9.55E-01	0.00E+00	2.36E-03	3.00E+02	6.00E+02
1.12E+00	0.00E+00	2.09E-03	3.00E+02	6.00E+02
1.34E+00	0.00E+00	1.81E-03	3.00E+02	6.00E+02
1.60E+00	0.00E+00	1.53E-03	3.00E+02	6.00E+02
1.93E+00	0.00E+00	1.27E-03	3.01E+02	6.00E+02
2.34E+00	0.00E+00	1.03E-03	3.01E+02	6.00E+02
2.85E+00	0.00E+00	8.18E-04	3.01E+02	6.00E+02
3.49E+00	0.00E+00	6.37E-04	3.01E+02	6.00E+02
4.29E+00	0.00E+00	4.87E-04	3.01E+02	6.00E+02
5.29E+00	0.00E+00	3.65E-04	3.02E+02	6.00E+02
6.53E+00	0.00E+00	2.69E-04	3.02E+02	6.00E+02
8.08E+00	0.00E+00	1.95E-04	3.02E+02	6.00E+02
1.00E+01	0.00E+00	1.40E-04	3.03E+02	6.00E+02
1.24E+01	0.00E+00	9.84E-05	3.04E+02	6.00E+02
1.55E+01	0.00E+00	6.85E-05	3.05E+02	6.00E+02
1.92E+01	0.00E+00	4.72E-05	3.06E+02	6.00E+02
2.39E+01	0.00E+00	3.22E-05	3.07E+02	6.00E+02
2.98E+01	0.00E+00	2.18E-05	3.09E+02	6.00E+02
3.72E+01	0.00E+00	1.47E-05	3.11E+02	6.00E+02
4.63E+01	0.00E+00	9.85E-06	3.14E+02	6.00E+02
5.78E+01	0.00E+00	6.60E-06	3.17E+02	6.00E+02
7.20E+01	0.00E+00	4.41E-06	3.21E+02	6.00E+02
8.99E+01	0.00E+00	2.95E-06	3.26E+02	6.00E+02
1.12E+02	0.00E+00	1.97E-06	3.33E+02	6.00E+02
1.40E+02	0.00E+00	1.31E-06	3.41E+02	6.00E+02
1.75E+02	0.00E+00	8.74E-07	3.51E+02	6.00E+02
2.18E+02	0.00E+00	5.82E-07	3.64E+02	6.00E+02
2.72E+02	0.00E+00	3.88E-07	3.79E+02	6.00E+02
3.39E+02	0.00E+00	2.59E-07	3.99E+02	6.00E+02
4.24E+02	0.00E+00	1.73E-07	4.24E+02	6.00E+02
5.29E+02	0.00E+00	1.15E-07	4.54E+02	6.00E+02
6.60E+02	0.00E+00	7.73E-08	4.93E+02	6.00E+02
8.24E+02	0.00E+00	5.19E-08	5.40E+02	6.00E+02
1.03E+03	0.00E+00	3.49E-08	6.00E+02	6.00E+02
1.29E+03	0.00E+00	2.27E-08	6.74E+02	6.07E+02
1.62E+03	0.00E+00	1.47E-08	7.66E+02	6.21E+02
2.06E+03	0.00E+00	9.54E-09	8.81E+02	6.42E+02

INPUT DATA FILE NAME : C:\CALPINE\IEEC\TEMP\HOSE2.SLB
OUTPUT LIST FILE NAME : C:\CALPINE\IEEC\TEMP\HOSE2.LST

problem input

idspl	=	1
ncalc	=	1
wms	=	0.017031
cps	=	2093.65
tbp	=	239.70
cmed0	=	1.00
dhe	=	1370837.
cpsl	=	4956.39
rhosl	=	639.00
spb	=	2132.50
spc	=	-32.98
ts	=	298.16
qs	=	0.00
as	=	0.37
tsd	=	600.
qtis	=	0.00
hs	=	0.00
tav	=	3600.00
xffm	=	2000.00
zp(1)	=	1.50
zp(2)	=	0.00
zp(3)	=	0.00
zp(4)	=	0.00
z0	=	0.100000
za	=	10.00
ua	=	3.00
ta	=	298.16
rh	=	50.00
stab	=	4.00

release gas properties

molecular weight of source gas (kg)	- wms	=	1.7031E-02
vapor heat capacity, const. p. (j/kg-k)	- cps	=	2.0937E+03
temperature of source gas (k)	- ts	=	2.3970E+02
density of source gas (kg/m3)	- rhos	=	8.6589E-01
boiling point temperature	- tbp	=	2.3970E+02
liquid mass fraction	- cmed0	=	0.0000E+00
liquid heat capacity (j/kg-k)	- cpsl	=	4.9564E+03
heat of vaporization (j/kg)	- dhe	=	1.3708E+06
liquid source density (kg/m3)	- rhosl	=	6.3900E+02
saturation pressure constant	- spa	=	1.0316E+01
saturation pressure constant (k)	- spb	=	2.1325E+03

```
 saturation pressure constant (k)                    - spc   = -3.2980E+01

spill characteristics

 spill type                                          - idspl=           1
 mass source rate (kg/s)                             - qs    =  3.4800E-03
 continuous source duration (s)                      - tsd   =  6.0000E+02
 continuous source mass (kg)                         - qtcs  =  2.0880E+00
 instantaneous source mass (kg)                      - qtis  =  0.0000E+00
 source area (m2)                                    - as    =  3.7200E-01
 vertical vapor velocity (m/s)                       - ws    =  1.0804E-02
 source half width (m)                               - bs    =  3.0496E-01
 source height (m)                                   - hs    =  0.0000E+00
 horizontal vapor velocity (m/s)                     - us    =  0.0000E+00

field parameters

 concentration averaging time (s)                    - tav   =  3.6000E+03
 mixing layer height (m)                             - hmx   =  1.0400E+03
 maximum downwind distrace (m)                       - xffm  =  2.0000E+03
 concentration measurement height (m)                - zp(1) =  1.5000E+00
                                                     - zp(2) =  0.0000E+00
                                                     - zp(3) =  0.0000E+00
                                                     - zp(4) =  0.0000E+00

ambient meteorological properties

 molecular weight of ambient air (kg)                - wmae  =  2.8780E-02
 heat capacity of ambient air at const p. (j/kg-k)   - cpaa  =  1.0145E+03
 density of ambient air (kg/m3)                      - rhoa  =  1.1763E+00
 ambient measurement height (m)                      - za    =  1.0000E+01
 ambient atmospheric pressure (pa=n/m2=j/m3)         - pa    =  1.0133E+05
 ambient wind speed (m/s)                            - ua    =  3.0000E+00
 ambient temperature (k)                             - ta    =  2.9816E+02
 relative humidity (percent)                         - rh    =  5.0000E+01
 ambient friction velocity (m/s)                     - uastr =  2.6764E-01
 atmospheric stability class value                   - stab  =  4.0000E+00
 inverse monin-obukhov length (1/m)                  - ala   =  0.0000E+00
 surface roughness height (m)                        - z0    =  1.0000E-01

additional parameters

 sub-step multiplier                                 - ncalc =           1
 number of calculational sub-steps                   - nssm  =           3
 acceleration of gravity (m/s2)                      - grav  =  9.8066E+00
 gas constant (j/mol- k)                             - rr    =  8.3143E+00
 von karman constant                                 - xk    =  4.1000E-01
1
```

instantaneous spatially averaged cloud parameters

x	zc	h	bb	b	bbx	bx	cv	rho	t	u	ua
-3.05E-01	0.00E+00	0.00E+00	3.05E-01	3.05E-01	3.05E-01	3.05E-01	0.00E+00	1.18E+00	2.98E+02	0.00E+00	0.00E+00
-2.44E-01	0.00E+00	2.78E-01	3.12E-01	3.05E-01	3.36E-01	3.36E-01	8.70E-03	1.17E+00	2.98E+02	3.31E-01	3.34E-01
-1.83E-01	0.00E+00	3.56E-01	3.15E-01	3.05E-01	3.66E-01	3.66E-01	1.07E-02	1.17E+00	2.97E+02	4.18E-01	4.25E-01
-1.22E-01	0.00E+00	4.13E-01	3.19E-01	3.05E-01	3.97E-01	3.97E-01	1.19E-02	1.17E+00	2.97E+02	4.77E-01	4.88E-01
-6.10E-02	0.00E+00	4.62E-01	3.22E-01	3.05E-01	4.28E-01	4.28E-01	1.28E-02	1.17E+00	2.97E+02	5.22E-01	5.38E-01
7.63E-17	0.00E+00	5.05E-01	3.26E-01	3.05E-01	4.59E-01	4.59E-01	1.36E-02	1.17E+00	2.97E+02	5.58E-01	5.80E-01
6.10E-02	0.00E+00	5.44E-01	3.29E-01	3.05E-01	4.89E-01	4.89E-01	1.42E-02	1.17E+00	2.97E+02	5.89E-01	6.16E-01
1.22E-01	0.00E+00	5.81E-01	3.33E-01	3.05E-01	5.20E-01	5.20E-01	1.46E-02	1.17E+00	2.97E+02	6.16E-01	6.48E-01
1.83E-01	0.00E+00	6.16E-01	3.37E-01	3.05E-01	5.51E-01	5.51E-01	1.51E-02	1.17E+00	2.97E+02	6.39E-01	6.78E-01
2.44E-01	0.00E+00	6.48E-01	3.41E-01	3.05E-01	5.81E-01	5.81E-01	1.54E-02	1.17E+00	2.97E+02	6.59E-01	7.04E-01
3.05E-01	0.00E+00	6.80E-01	3.44E-01	3.05E-01	6.12E-01	6.12E-01	1.57E-02	1.17E+00	2.97E+02	6.77E-01	7.29E-01
3.13E-01	1.89E-06	6.85E-01	3.45E-01	3.05E-01	6.20E-01	6.20E-01	1.56E-02	1.17E+00	2.97E+02	6.78E-01	7.33E-01
3.22E-01	9.43E-06	6.89E-01	3.45E-01	3.05E-01	6.29E-01	6.29E-01	1.54E-02	1.17E+00	2.97E+02	6.82E-01	7.36E-01
3.34E-01	2.66E-05	6.93E-01	3.46E-01	3.05E-01	6.41E-01	6.41E-01	1.51E-02	1.17E+00	2.97E+02	6.86E-01	7.39E-01
3.49E-01	5.96E-05	6.97E-01	3.49E-01	3.05E-01	6.56E-01	6.56E-01	1.49E-02	1.17E+00	2.97E+02	6.90E-01	7.42E-01
3.67E-01	1.18E-04	7.02E-01	3.51E-01	3.05E-01	6.75E-01	6.75E-01	1.45E-02	1.17E+00	2.97E+02	6.96E-01	7.46E-01
3.90E-01	2.15E-04	7.09E-01	3.54E-01	3.05E-01	6.98E-01	6.98E-01	1.41E-02	1.17E+00	2.97E+02	7.03E-01	7.51E-01
4.19E-01	3.73E-04	7.17E-01	3.59E-01	3.05E-01	7.27E-01	7.27E-01	1.36E-02	1.17E+00	2.97E+02	7.11E-01	7.57E-01
4.54E-01	6.19E-04	7.27E-01	3.64E-01	3.05E-01	7.63E-01	7.63E-01	1.31E-02	1.17E+00	2.97E+02	7.20E-01	7.64E-01
4.99E-01	9.96E-04	7.40E-01	3.70E-01	3.05E-01	8.08E-01	8.08E-01	1.25E-02	1.17E+00	2.97E+02	7.32E-01	7.73E-01
5.55E-01	1.56E-03	7.55E-01	3.77E-01	3.05E-01	8.64E-01	8.64E-01	1.17E-02	1.17E+00	2.97E+02	7.46E-01	7.84E-01
6.24E-01	2.38E-03	7.74E-01	3.87E-01	3.05E-01	9.34E-01	9.34E-01	1.09E-02	1.17E+00	2.98E+02	7.62E-01	7.97E-01
7.11E-01	3.55E-03	7.97E-01	3.98E-01	3.05E-01	1.02E+00	1.02E+00	1.01E-02	1.17E+00	2.98E+02	7.82E-01	8.13E-01
8.20E-01	5.19E-03	8.25E-01	4.12E-01	3.05E-01	1.13E+00	1.13E+00	9.12E-03	1.17E+00	2.98E+02	8.04E-01	8.32E-01
9.55E-01	7.42E-03	8.59E-01	4.30E-01	3.05E-01	1.27E+00	1.27E+00	8.15E-03	1.17E+00	2.98E+02	8.30E-01	8.54E-01
1.12E+00	1.04E-02	9.01E-01	4.50E-01	3.05E-01	1.44E+00	1.44E+00	7.16E-03	1.17E+00	2.98E+02	8.60E-01	8.80E-01
1.34E+00	1.43E-02	9.51E-01	4.76E-01	3.05E-01	1.65E+00	1.65E+00	6.18E-03	1.17E+00	2.98E+02	8.94E-01	9.11E-01
1.60E+00	1.92E-02	1.01E+00	5.06E-01	3.05E-01	1.92E+00	1.92E+00	5.24E-03	1.17E+00	2.98E+02	9.31E-01	9.45E-01
1.93E+00	2.53E-02	1.08E+00	5.42E-01	3.05E-01	2.25E+00	2.25E+00	4.37E-03	1.18E+00	2.98E+02	9.73E-01	9.85E-01
2.34E+00	3.27E-02	1.17E+00	5.85E-01	3.05E-01	2.66E+00	2.66E+00	3.58E-03	1.18E+00	2.98E+02	1.02E+00	1.03E+00
2.85E+00	4.14E-02	1.27E+00	6.36E-01	3.05E-01	3.18E+00	3.18E+00	2.88E-03	1.18E+00	2.98E+02	1.07E+00	1.08E+00
3.49E+00	5.17E-02	1.39E+00	6.97E-01	3.05E-01	3.82E+00	3.82E+00	2.29E-03	1.18E+00	2.98E+02	1.13E+00	1.13E+00
4.29E+00	6.33E-02	1.54E+00	7.69E-01	3.05E-01	4.63E+00	4.63E+00	1.79E-03	1.18E+00	2.98E+02	1.18E+00	1.19E+00
5.29E+00	7.64E-02	1.71E+00	8.53E-01	3.05E-01	5.63E+00	5.63E+00	1.38E-03	1.18E+00	2.98E+02	1.25E+00	1.25E+00
6.53E+00	9.08E-02	1.91E+00	9.53E-01	3.05E-01	6.88E+00	6.88E+00	1.05E-03	1.18E+00	2.98E+02	1.32E+00	1.32E+00
8.08E+00	1.07E-01	2.14E+00	1.07E+00	3.05E-01	8.45E+00	8.45E+00	7.87E-04	1.18E+00	2.98E+02	1.39E+00	1.39E+00
1.00E+01	1.23E-01	2.42E+00	1.21E+00	3.05E-01	1.04E+01	1.04E+01	5.84E-04	1.18E+00	2.98E+02	1.46E+00	1.46E+00
1.24E+01	1.41E-01	2.75E+00	1.37E+00	3.05E-01	1.28E+01	1.28E+01	4.30E-04	1.18E+00	2.98E+02	1.54E+00	1.54E+00
1.55E+01	1.60E-01	3.14E+00	1.57E+00	3.05E-01	1.59E+01	1.59E+01	3.13E-04	1.18E+00	2.98E+02	1.62E+00	1.62E+00
1.92E+01	1.79E-01	3.60E+00	1.80E+00	3.05E-01	1.97E+01	1.97E+01	2.26E-04	1.18E+00	2.98E+02	1.71E+00	1.71E+00
2.39E+01	1.99E-01	4.15E+00	2.07E+00	3.05E-01	2.44E+01	2.44E+01	1.61E-04	1.18E+00	2.98E+02	1.80E+00	1.80E+00
2.98E+01	2.20E-01	4.80E+00	2.40E+00	3.05E-01	3.04E+01	3.04E+01	1.14E-04	1.18E+00	2.98E+02	1.89E+00	1.89E+00
3.72E+01	2.41E-01	5.56E+00	2.81E+00	3.05E-01	3.78E+01	3.77E+01	8.05E-05	1.18E+00	2.98E+02	1.98E+00	1.98E+00
4.63E+01	2.61E-01	6.44E+00	3.33E+00	3.05E-01	4.70E+01	4.70E+01	5.62E-05	1.18E+00	2.98E+02	2.08E+00	2.08E+00
5.78E+01	2.82E-01	7.46E+00	3.96E+00	3.05E-01	5.85E+01	5.85E+01	3.90E-05	1.18E+00	2.98E+02	2.17E+00	2.17E+00
7.20E+01	3.03E-01	8.65E+00	4.75E+00	3.05E-01	7.29E+01	7.29E+01	2.68E-05	1.18E+00	2.98E+02	2.27E+00	2.27E+00
8.99E+01	3.23E-01	1.00E+01	5.74E+00	3.05E-01	9.08E+01	9.08E+01	1.84E-05	1.18E+00	2.98E+02	2.36E+00	2.36E+00

1.12E+02	3.44E-01	1.17E+01	6.97E+00	3.05E-01	1.13E+02	1.13E+02	1.25E-05	1.18E+00	2.98E+02	2.46E+00	2.46E+00
1.40E+02	3.64E-01	1.36E+01	8.49E+00	3.05E-01	1.41E+02	1.41E+02	8.50E-06	1.18E+00	2.98E+02	2.55E+00	2.55E+00
1.75E+02	3.83E-01	1.58E+01	1.04E+01	3.05E-01	1.76E+02	1.76E+02	5.75E-06	1.18E+00	2.98E+02	2.65E+00	2.65E+00
2.18E+02	4.03E-01	1.84E+01	1.27E+01	3.05E-01	2.20E+02	2.20E+02	3.88E-06	1.18E+00	2.98E+02	2.75E+00	2.75E+00
2.72E+02	4.22E-01	2.15E+01	1.56E+01	3.05E-01	2.74E+02	2.74E+02	2.62E-06	1.18E+00	2.98E+02	2.85E+00	2.85E+00
3.39E+02	4.38E-01	2.51E+01	1.92E+01	3.05E-01	3.42E+02	3.42E+02	1.76E-06	1.18E+00	2.98E+02	2.95E+00	2.95E+00
4.24E+02	4.52E-01	2.93E+01	2.36E+01	3.05E-01	4.27E+02	4.27E+02	1.18E-06	1.18E+00	2.98E+02	3.05E+00	3.05E+00
5.29E+02	4.63E-01	3.43E+01	2.90E+01	3.05E-01	5.33E+02	5.33E+02	7.97E-07	1.18E+00	2.98E+02	3.15E+00	3.15E+00
6.60E+02	4.72E-01	4.02E+01	3.57E+01	3.05E-01	6.65E+02	6.65E+02	5.37E-07	1.18E+00	2.98E+02	3.25E+00	3.25E+00
8.24E+02	4.79E-01	4.71E+01	4.37E+01	3.05E-01	8.30E+02	8.30E+02	3.62E-07	1.18E+00	2.98E+02	3.35E+00	3.35E+00
1.03E+03	4.85E-01	5.53E+01	5.36E+01	3.05E-01	1.04E+03	1.04E+03	2.44E-07	1.18E+00	2.98E+02	3.45E+00	3.45E+00
1.29E+03	4.90E-01	6.68E+01	6.57E+01	3.05E-01	1.09E+03	1.04E+03	1.58E-07	1.18E+00	2.98E+02	3.57E+00	3.57E+00
1.62E+03	4.94E-01	8.06E+01	8.07E+01	3.05E-01	1.15E+03	1.04E+03	1.01E-07	1.18E+00	2.98E+02	3.69E+00	3.69E+00
2.06E+03	4.97E-01	9.71E+01	9.91E+01	3.05E-01	1.22E+03	1.04E+03	6.37E-08	1.18E+00	2.98E+02	3.81E+00	3.81E+00

1

x	cm	cmv	cmda	cmw	cmwv	wc	vg	ug	w	v	vx
-3.05E-01	0.00E+00	0.00E+00	9.90E-01	1.03E-02	1.03E-02	0.00E+00	0.00E+00	0.00E+00	7.47E-01	9.76E-02	0.00E+00
-2.44E-01	5.16E-03	5.16E-03	9.85E-01	1.03E-02	1.03E-02	0.00E+00	0.00E+00	0.00E+00	6.00E-01	1.09E-02	1.74E-01
-1.83E-01	6.33E-03	6.33E-03	9.83E-01	1.02E-02	1.02E-02	0.00E+00	0.00E+00	0.00E+00	4.82E-01	1.38E-02	1.98E-01
-1.22E-01	7.09E-03	7.09E-03	9.83E-01	1.02E-02	1.02E-02	0.00E+00	0.00E+00	0.00E+00	4.29E-01	1.59E-02	2.13E-01
-6.10E-02	7.64E-03	7.64E-03	9.82E-01	1.02E-02	1.02E-02	0.00E+00	0.00E+00	0.00E+00	3.96E-01	1.75E-02	2.24E-01
7.63E-17	8.07E-03	8.07E-03	9.82E-01	1.02E-02	1.02E-02	0.00E+00	0.00E+00	0.00E+00	3.72E-01	1.89E-02	2.32E-01
6.10E-02	8.43E-03	8.43E-03	9.81E-01	1.02E-02	1.02E-02	0.00E+00	0.00E+00	0.00E+00	3.53E-01	2.02E-02	2.39E-01
1.22E-01	8.72E-03	8.72E-03	9.81E-01	1.02E-02	1.02E-02	0.00E+00	0.00E+00	0.00E+00	3.38E-01	2.13E-02	2.45E-01
1.83E-01	8.96E-03	8.96E-03	9.81E-01	1.02E-02	1.02E-02	0.00E+00	0.00E+00	0.00E+00	3.26E-01	2.23E-02	2.51E-01
2.44E-01	9.17E-03	9.17E-03	9.81E-01	1.02E-02	1.02E-02	0.00E+00	0.00E+00	0.00E+00	3.15E-01	2.32E-02	2.55E-01
3.05E-01	9.35E-03	9.35E-03	9.80E-01	1.02E-02	1.02E-02	0.00E+00	0.00E+00	0.00E+00	3.05E-01	2.41E-02	2.59E-01
3.13E-01	9.26E-03	9.26E-03	9.81E-01	1.02E-02	1.02E-02	3.37E-04	0.00E+00	0.00E+00	3.04E-01	2.43E-02	2.60E-01
3.22E-01	9.15E-03	9.15E-03	9.81E-01	1.02E-02	1.02E-02	7.47E-04	0.00E+00	0.00E+00	3.03E-01	2.44E-02	2.61E-01
3.34E-01	9.01E-03	9.01E-03	9.81E-01	1.02E-02	1.02E-02	1.24E-03	0.00E+00	0.00E+00	3.02E-01	2.44E-02	2.61E-01
3.49E-01	8.84E-03	8.84E-03	9.81E-01	1.02E-02	1.02E-02	1.84E-03	0.00E+00	0.00E+00	3.01E-01	2.45E-02	2.62E-01
3.67E-01	8.64E-03	8.64E-03	9.81E-01	1.02E-02	1.02E-02	2.55E-03	0.00E+00	0.00E+00	2.99E-01	2.46E-02	2.62E-01
3.90E-01	8.40E-03	8.40E-03	9.81E-01	1.02E-02	1.02E-02	3.39E-03	0.00E+00	0.00E+00	2.98E-01	2.48E-02	2.63E-01
4.19E-01	8.12E-03	8.12E-03	9.82E-01	1.02E-02	1.02E-02	4.36E-03	0.00E+00	0.00E+00	2.96E-01	2.49E-02	2.64E-01
4.54E-01	7.79E-03	7.79E-03	9.82E-01	1.02E-02	1.02E-02	5.48E-03	0.00E+00	0.00E+00	2.94E-01	2.51E-02	2.65E-01
4.99E-01	7.41E-03	7.41E-03	9.82E-01	1.02E-02	1.02E-02	6.74E-03	0.00E+00	0.00E+00	2.92E-01	2.54E-02	2.67E-01
5.55E-01	6.98E-03	6.98E-03	9.83E-01	1.02E-02	1.02E-02	8.13E-03	0.00E+00	0.00E+00	2.89E-01	2.57E-02	2.69E-01
6.24E-01	6.50E-03	6.50E-03	9.83E-01	1.02E-02	1.02E-02	9.61E-03	0.00E+00	0.00E+00	2.86E-01	2.61E-02	2.71E-01
7.11E-01	5.98E-03	5.98E-03	9.84E-01	1.02E-02	1.02E-02	1.12E-02	0.00E+00	0.00E+00	2.83E-01	2.65E-02	2.74E-01
8.20E-01	5.42E-03	5.42E-03	9.84E-01	1.03E-02	1.03E-02	1.27E-02	0.00E+00	0.00E+00	2.79E-01	2.71E-02	2.77E-01
9.55E-01	4.84E-03	4.84E-03	9.85E-01	1.03E-02	1.03E-02	1.42E-02	0.00E+00	0.00E+00	2.75E-01	2.78E-02	2.81E-01
1.12E+00	4.25E-03	4.25E-03	9.85E-01	1.03E-02	1.03E-02	1.55E-02	0.00E+00	0.00E+00	2.71E-01	2.86E-02	2.85E-01
1.34E+00	3.67E-03	3.67E-03	9.86E-01	1.03E-02	1.03E-02	1.66E-02	0.00E+00	0.00E+00	2.66E-01	2.96E-02	2.90E-01
1.60E+00	3.11E-03	3.11E-03	9.87E-01	1.03E-02	1.03E-02	1.74E-02	0.00E+00	0.00E+00	2.60E-01	3.07E-02	2.95E-01
1.93E+00	2.59E-03	2.59E-03	9.87E-01	1.03E-02	1.03E-02	1.79E-02	0.00E+00	0.00E+00	2.54E-01	3.20E-02	3.01E-01
2.34E+00	2.12E-03	2.12E-03	9.88E-01	1.03E-02	1.03E-02	1.80E-02	0.00E+00	0.00E+00	2.47E-01	3.34E-02	3.07E-01
2.85E+00	1.71E-03	1.71E-03	9.88E-01	1.03E-02	1.03E-02	1.78E-02	0.00E+00	0.00E+00	2.39E-01	3.50E-02	3.13E-01
3.49E+00	1.35E-03	1.35E-03	9.88E-01	1.03E-02	1.03E-02	1.73E-02	0.00E+00	0.00E+00	2.31E-01	3.67E-02	3.19E-01
4.29E+00	1.06E-03	1.06E-03	9.89E-01	1.03E-02	1.03E-02	1.65E-02	0.00E+00	0.00E+00	2.23E-01	3.85E-02	3.25E-01
5.29E+00	8.15E-04	8.15E-04	9.89E-01	1.03E-02	1.03E-02	1.55E-02	0.00E+00	0.00E+00	2.14E-01	4.06E-02	3.31E-01
6.53E+00	6.20E-04	6.20E-04	9.89E-01	1.03E-02	1.03E-02	1.43E-02	0.00E+00	0.00E+00	2.06E-01	4.27E-02	3.37E-01

8.08E+00	4.66E-04	4.66E-04	9.89E-01	1.03E-02	1.03E-02	1.31E-02	0.00E+00	0.00E+00	1.98E-01	4.50E-02	3.42E-01
1.00E+01	3.46E-04	3.46E-04	9.89E-01	1.03E-02	1.03E-02	1.18E-02	0.00E+00	0.00E+00	1.91E-01	4.74E-02	3.47E-01
1.24E+01	2.54E-04	2.54E-04	9.89E-01	1.03E-02	1.03E-02	1.05E-02	0.00E+00	0.00E+00	1.83E-01	4.99E-02	3.52E-01
1.55E+01	1.85E-04	1.85E-04	9.90E-01	1.03E-02	1.03E-02	9.22E-03	0.00E+00	0.00E+00	1.76E-01	5.25E-02	3.56E-01
1.92E+01	1.34E-04	1.34E-04	9.90E-01	1.03E-02	1.03E-02	8.03E-03	0.00E+00	0.00E+00	1.69E-01	5.53E-02	3.60E-01
2.39E+01	9.55E-05	9.55E-05	9.90E-01	1.03E-02	1.03E-02	6.93E-03	0.00E+00	0.00E+00	1.63E-01	5.81E-02	3.64E-01
2.98E+01	6.77E-05	6.77E-05	9.90E-01	1.03E-02	1.03E-02	5.93E-03	0.00E+00	0.00E+00	1.56E-01	6.10E-02	3.67E-01
3.72E+01	4.76E-05	4.76E-05	9.90E-01	1.03E-02	1.03E-02	5.03E-03	0.00E+00	0.00E+00	1.51E-01	6.39E-02	3.70E-01
4.63E+01	3.33E-05	3.33E-05	9.90E-01	1.03E-02	1.03E-02	4.23E-03	0.00E+00	0.00E+00	1.45E-01	6.68E-02	3.73E-01
5.78E+01	2.31E-05	2.31E-05	9.90E-01	1.03E-02	1.03E-02	3.53E-03	0.00E+00	0.00E+00	1.40E-01	6.97E-02	3.75E-01
7.20E+01	1.59E-05	1.59E-05	9.90E-01	1.03E-02	1.03E-02	2.94E-03	0.00E+00	0.00E+00	1.35E-01	7.25E-02	3.77E-01
8.99E+01	1.09E-05	1.09E-05	9.90E-01	1.03E-02	1.03E-02	2.43E-03	0.00E+00	0.00E+00	1.31E-01	7.53E-02	3.78E-01
1.12E+02	7.41E-06	7.41E-06	9.90E-01	1.03E-02	1.03E-02	1.99E-03	0.00E+00	0.00E+00	1.26E-01	7.80E-02	3.80E-01
1.40E+02	5.03E-06	5.03E-06	9.90E-01	1.03E-02	1.03E-02	1.64E-03	0.00E+00	0.00E+00	1.22E-01	8.07E-02	3.81E-01
1.75E+02	3.41E-06	3.41E-06	9.90E-01	1.03E-02	1.03E-02	1.34E-03	0.00E+00	0.00E+00	1.18E-01	8.32E-02	3.82E-01
2.18E+02	2.30E-06	2.30E-06	9.90E-01	1.03E-02	1.03E-02	1.09E-03	0.00E+00	0.00E+00	1.15E-01	8.56E-02	3.83E-01
2.72E+02	1.55E-06	1.55E-06	9.90E-01	1.03E-02	1.03E-02	8.80E-04	0.00E+00	0.00E+00	1.11E-01	8.78E-02	3.83E-01
3.39E+02	1.04E-06	1.04E-06	9.90E-01	1.03E-02	1.03E-02	5.93E-04	0.00E+00	0.00E+00	1.08E-01	8.98E-02	3.84E-01
4.24E+02	7.01E-07	7.01E-07	9.90E-01	1.03E-02	1.03E-02	3.99E-04	0.00E+00	0.00E+00	1.04E-01	9.15E-02	3.84E-01
5.29E+02	4.72E-07	4.72E-07	9.90E-01	1.03E-02	1.03E-02	2.68E-04	0.00E+00	0.00E+00	1.01E-01	9.29E-02	3.84E-01
6.60E+02	3.18E-07	3.18E-07	9.90E-01	1.03E-02	1.03E-02	1.81E-04	0.00E+00	0.00E+00	9.79E-02	9.39E-02	3.84E-01
8.24E+02	2.14E-07	2.14E-07	9.90E-01	1.03E-02	1.03E-02	1.22E-04	0.00E+00	0.00E+00	9.48E-02	9.44E-02	3.84E-01
1.03E+03	1.45E-07	1.45E-07	9.90E-01	1.03E-02	1.03E-02	8.22E-05	0.00E+00	0.00E+00	9.17E-02	9.44E-02	3.83E-01
1.29E+03	9.32E-08	9.32E-08	9.90E-01	1.03E-02	1.03E-02	5.30E-05	0.00E+00	0.00E+00	8.81E-02	9.43E-02	3.83E-01
1.62E+03	5.96E-08	5.96E-08	9.90E-01	1.03E-02	1.03E-02	3.39E-05	0.00E+00	0.00E+00	8.46E-02	9.33E-02	3.82E-01
2.06E+03	3.77E-08	3.77E-08	9.90E-01	1.03E-02	1.03E-02	2.14E-05	0.00E+00	0.00E+00	8.11E-02	9.16E-02	3.80E-01

1

time averaged (tav = 3600. s) volume concentration: concentration contour parameters

c(x,y,z,t) = cc(x) * (erf(xa)-erf(xb)) * (erf(ya)-erf(yb)) * (exp(-za*za)+exp(-zb*zb))

```
c(x,y,z,t) = concentration (volume fraction) at (x,y,z,t)
         x = downwind distance (m)
         y = crosswind horizontal distance (m)
         z = height (m)
         t = time (s)

       erf = error functon
        xa = (x-xc+bx)/(sr2*betax)
        xb = (x-xc-bx)/(sr2*betax)
        ya = (y+b)/(sr2*betac)
        yb = (y-b)/(sr2*betac)
       exp = exponential function
        za = (z-zc)/(sr2*sig)
        zb = (z+zc)/(sr2*sig)
       sr2 = sqrt(2.0)
```

x	cc(x)	b(x)	betac(x)	zc(x)	sig(x)
-3.05E-01	0.00E+00	3.05E-01	2.49E-03	0.00E+00	0.00E+00
-2.44E-01	1.53E-03	3.05E-01	3.68E-02	0.00E+00	1.61E-01
-1.83E-01	1.90E-03	3.05E-01	4.62E-02	0.00E+00	2.05E-01

t	xc(t)	bx(t)	betax(t)
3.26E-01	0.00E+00	3.05E-01	2.49E-03
3.84E-01	3.05E-02	3.36E-01	2.74E-03
4.42E-01	6.10E-02	3.66E-01	2.99E-03

-1.22E-01	2.15E-03	3.05E-01	5.44E-02	0.00E+00	2.39E-01
-6.10E-02	2.35E-03	3.05E-01	6.19E-02	0.00E+00	2.67E-01
7.63E-17	2.52E-03	3.05E-01	6.90E-02	0.00E+00	2.91E-01
6.10E-02	2.66E-03	3.05E-01	7.57E-02	0.00E+00	3.14E-01
1.22E-01	2.79E-03	3.05E-01	8.21E-02	0.00E+00	3.35E-01
1.83E-01	2.91E-03	3.05E-01	8.84E-02	0.00E+00	3.55E-01
2.44E-01	3.02E-03	3.05E-01	9.45E-02	0.00E+00	3.74E-01
3.05E-01	3.12E-03	3.05E-01	1.01E-01	0.00E+00	3.93E-01
3.13E-01	3.10E-03	3.05E-01	1.01E-01	1.89E-06	3.96E-01
3.22E-01	3.07E-03	3.05E-01	1.02E-01	9.43E-06	3.98E-01
3.34E-01	3.03E-03	3.05E-01	1.04E-01	2.66E-05	4.00E-01
3.49E-01	3.00E-03	3.05E-01	1.06E-01	5.96E-05	4.02E-01
3.67E-01	2.95E-03	3.05E-01	1.10E-01	1.18E-04	4.05E-01
3.90E-01	2.90E-03	3.05E-01	1.14E-01	2.15E-04	4.09E-01
4.19E-01	2.84E-03	3.05E-01	1.19E-01	3.73E-04	4.14E-01
4.54E-01	2.77E-03	3.05E-01	1.25E-01	6.19E-04	4.19E-01
4.99E-01	2.69E-03	3.05E-01	1.32E-01	9.96E-04	4.26E-01
5.55E-01	2.60E-03	3.05E-01	1.40E-01	1.56E-03	4.35E-01
6.24E-01	2.49E-03	3.05E-01	1.50E-01	2.38E-03	4.45E-01
7.11E-01	2.37E-03	3.05E-01	1.62E-01	3.55E-03	4.58E-01
8.20E-01	2.25E-03	3.05E-01	1.77E-01	5.19E-03	4.73E-01
9.55E-01	2.11E-03	3.05E-01	1.94E-01	7.42E-03	4.92E-01
1.12E+00	1.97E-03	3.05E-01	2.13E-01	1.04E-02	5.14E-01
1.34E+00	1.82E-03	3.05E-01	2.37E-01	1.43E-02	5.41E-01
1.60E+00	1.67E-03	3.05E-01	2.65E-01	1.92E-02	5.73E-01
1.93E+00	1.52E-03	3.05E-01	2.98E-01	2.53E-02	6.11E-01
2.34E+00	1.37E-03	3.05E-01	3.37E-01	3.27E-02	6.57E-01
2.85E+00	1.24E-03	3.05E-01	3.84E-01	4.14E-02	7.11E-01
3.49E+00	1.10E-03	3.05E-01	4.41E-01	5.17E-02	7.75E-01
4.29E+00	9.83E-04	3.05E-01	5.08E-01	6.33E-02	8.51E-01
5.29E+00	8.71E-04	3.05E-01	5.90E-01	7.64E-02	9.41E-01
6.53E+00	7.68E-04	3.05E-01	6.90E-01	9.08E-02	1.05E+00
8.08E+00	6.75E-04	3.05E-01	8.12E-01	1.07E-01	1.17E+00
1.00E+01	5.91E-04	3.05E-01	9.61E-01	1.23E-01	1.33E+00
1.24E+01	5.15E-04	3.05E-01	1.14E+00	1.41E-01	1.50E+00
1.55E+01	4.47E-04	3.05E-01	1.37E+00	1.60E-01	1.72E+00
1.92E+01	3.87E-04	3.05E-01	1.65E+00	1.79E-01	1.97E+00
2.39E+01	3.33E-04	3.05E-01	1.99E+00	1.99E-01	2.28E+00
2.98E+01	2.86E-04	3.05E-01	2.42E+00	2.20E-01	2.65E+00
3.72E+01	2.44E-04	3.05E-01	2.95E+00	2.41E-01	3.07E+00
4.63E+01	2.08E-04	3.05E-01	3.62E+00	2.61E-01	3.57E+00
5.78E+01	1.77E-04	3.05E-01	4.45E+00	2.82E-01	4.14E+00
7.20E+01	1.50E-04	3.05E-01	5.49E+00	3.03E-01	4.82E+00
8.99E+01	1.26E-04	3.05E-01	6.78E+00	3.23E-01	5.61E+00
1.12E+02	1.06E-04	3.05E-01	8.39E+00	3.44E-01	6.53E+00
1.40E+02	8.91E-05	3.05E-01	1.04E+01	3.64E-01	7.62E+00
1.75E+02	7.45E-05	3.05E-01	1.29E+01	3.83E-01	8.89E+00
2.18E+02	6.21E-05	3.05E-01	1.59E+01	4.03E-01	1.04E+01
2.72E+02	5.17E-05	3.05E-01	1.97E+01	4.22E-01	1.21E+01
3.39E+02	4.30E-05	3.05E-01	2.44E+01	4.38E-01	1.42E+01
4.24E+02	3.57E-05	3.05E-01	3.02E+01	4.52E-01	1.67E+01
5.29E+02	2.96E-05	3.05E-01	3.73E+01	4.63E-01	1.95E+01

5.08E-01	9.15E-02	3.97E-01	3.24E-03
5.74E-01	1.22E-01	4.28E-01	3.49E-03
6.47E-01	1.52E-01	4.59E-01	3.74E-03
7.20E-01	1.83E-01	4.89E-01	4.00E-03
8.00E-01	2.13E-01	5.20E-01	4.25E-03
8.80E-01	2.44E-01	5.51E-01	4.50E-03
9.67E-01	2.74E-01	5.81E-01	4.75E-03
1.05E+00	3.05E-01	6.12E-01	5.00E-03
1.08E+00	3.13E-01	6.20E-01	5.06E-03
1.10E+00	3.22E-01	6.29E-01	5.14E-03
1.14E+00	3.34E-01	6.41E-01	5.24E-03
1.18E+00	3.49E-01	6.56E-01	5.36E-03
1.23E+00	3.67E-01	6.75E-01	5.51E-03
1.30E+00	3.90E-01	6.98E-01	5.70E-03
1.38E+00	4.19E-01	7.27E-01	5.93E-03
1.48E+00	4.54E-01	7.63E-01	6.23E-03
1.60E+00	4.99E-01	8.08E-01	6.59E-03
1.75E+00	5.55E-01	8.64E-01	7.05E-03
1.94E+00	6.24E-01	9.34E-01	7.63E-03
2.16E+00	7.11E-01	1.02E+00	8.34E-03
2.44E+00	8.20E-01	1.13E+00	9.23E-03
2.77E+00	9.55E-01	1.27E+00	1.03E-02
3.17E+00	1.12E+00	1.44E+00	1.17E-02
3.65E+00	1.34E+00	1.65E+00	1.35E-02
4.23E+00	1.60E+00	1.92E+00	1.56E-02
4.92E+00	1.93E+00	2.25E+00	1.83E-02
5.74E+00	2.34E+00	2.66E+00	2.17E-02
6.72E+00	2.85E+00	3.18E+00	2.59E-02
7.89E+00	3.49E+00	3.82E+00	3.12E-02
9.27E+00	4.29E+00	4.63E+00	3.78E-02
1.09E+01	5.29E+00	5.63E+00	4.60E-02
1.28E+01	6.53E+00	6.88E+00	5.62E-02
1.51E+01	8.08E+00	8.45E+00	6.90E-02
1.79E+01	1.00E+01	1.04E+01	8.49E-02
2.11E+01	1.24E+01	1.28E+01	1.05E-01
2.49E+01	1.55E+01	1.59E+01	1.30E-01
2.94E+01	1.92E+01	1.97E+01	1.61E-01
3.48E+01	2.39E+01	2.44E+01	1.99E-01
4.12E+01	2.98E+01	3.04E+01	2.48E-01
4.87E+01	3.72E+01	3.77E+01	3.08E-01
5.78E+01	4.63E+01	4.70E+01	3.84E-01
6.85E+01	5.78E+01	5.85E+01	4.78E-01
8.14E+01	7.20E+01	7.29E+01	5.95E-01
9.68E+01	8.99E+01	9.08E+01	7.42E-01
1.15E+02	1.12E+02	1.13E+02	9.25E-01
1.37E+02	1.40E+02	1.41E+02	1.15E+00
1.64E+02	1.75E+02	1.76E+02	1.44E+00
1.96E+02	2.18E+02	2.20E+02	1.79E+00
2.35E+02	2.72E+02	2.74E+02	2.24E+00
2.81E+02	3.39E+02	3.42E+02	2.79E+00
3.37E+02	4.24E+02	4.27E+02	3.49E+00
4.05E+02	5.29E+02	5.33E+02	4.35E+00

6.60E+02	2.45E-05	3.05E-01	4.60E+01	4.72E-01	2.29E+01	4.87E+02	6.60E+02	6.65E+02	5.43E+00
8.24E+02	2.03E-05	3.05E-01	5.66E+01	4.79E-01	2.69E+01	5.86E+02	8.24E+02	8.30E+02	6.78E+00
1.03E+03	1.68E-05	3.05E-01	6.95E+01	4.85E-01	3.16E+01	7.06E+02	1.03E+03	1.04E+03	8.46E+00
1.29E+03	1.40E-05	3.05E-01	8.56E+01	4.90E-01	3.83E+01	6.74E+02	1.29E+03	1.04E+03	1.87E+02
1.62E+03	1.16E-05	3.05E-01	1.06E+02	4.94E-01	4.62E+01	7.66E+02	1.62E+03	1.04E+03	2.83E+02
2.06E+03	9.72E-06	3.05E-01	1.31E+02	4.97E-01	5.58E+01	8.81E+02	2.06E+03	1.04E+03	3.75E+02

1

time averaged (tav = 3600. s) volume concentration: concentration in the z = 1.50 plane.

downwind distance x (m)	time of max conc (s)	cloud duration (s)	effective half width bbc (m)	average concentration (volume fraction) at (x,y,z) y/bbc= 0.0	y/bbc= 0.5	y/bbc= 1.0	y/bbc= 1.5	y/bbc= 2.0	y/bbc= 2.5
-3.05E-01	3.00E+02	6.00E+02	3.05E-01	0.00E+00	0.00E+00	0.00E+00	0.00E+00	0.00E+00	0.00E+00
-2.44E-01	3.00E+02	6.00E+02	3.12E-01	2.33E-22	2.33E-22	1.00E-22	1.21E-27	0.00E+00	0.00E+00
-1.83E-01	3.00E+02	6.00E+02	3.15E-01	6.51E-15	6.51E-15	2.68E-15	9.02E-19	5.88E-27	0.00E+00
-1.22E-01	3.00E+02	6.00E+02	3.19E-01	7.47E-12	7.45E-12	2.97E-12	5.22E-15	3.29E-21	0.00E+00
-6.10E-02	3.00E+02	6.00E+02	3.23E-01	4.18E-10	4.13E-10	1.60E-10	7.62E-13	7.14E-18	9.27E-26
7.63E-17	3.00E+02	6.00E+02	3.28E-01	5.93E-09	5.81E-09	2.20E-09	2.04E-11	1.13E-15	2.67E-22
6.10E-02	3.00E+02	6.00E+02	3.32E-01	3.97E-08	3.84E-08	1.43E-08	2.13E-10	4.13E-14	7.78E-20
1.22E-01	3.00E+02	6.00E+02	3.37E-01	1.67E-07	1.59E-07	5.86E-08	1.25E-09	6.13E-13	5.36E-18
1.83E-01	3.00E+02	6.00E+02	3.41E-01	5.17E-07	4.85E-07	1.76E-07	4.97E-09	4.99E-12	1.42E-16
2.44E-01	3.00E+02	6.00E+02	3.46E-01	1.29E-06	1.19E-06	4.29E-07	1.51E-08	2.67E-11	1.93E-15
3.05E-01	3.00E+02	6.00E+02	3.51E-01	2.76E-06	2.49E-06	8.92E-07	3.77E-08	1.05E-10	1.62E-14
3.13E-01	3.00E+02	6.00E+02	3.52E-01	3.04E-06	2.74E-06	9.83E-07	4.24E-08	1.25E-10	2.08E-14
3.22E-01	3.00E+02	6.00E+02	3.53E-01	3.25E-06	2.92E-06	1.04E-06	4.62E-08	1.45E-10	2.67E-14
3.34E-01	3.00E+02	6.00E+02	3.54E-01	3.49E-06	3.12E-06	1.12E-06	5.13E-08	1.77E-10	3.86E-14
3.49E-01	3.00E+02	6.00E+02	3.57E-01	3.75E-06	3.33E-06	1.18E-06	5.83E-08	2.38E-10	6.83E-14
3.67E-01	3.00E+02	6.00E+02	3.60E-01	4.09E-06	3.59E-06	1.27E-06	6.76E-08	3.34E-10	1.30E-13
3.90E-01	3.00E+02	6.00E+02	3.63E-01	4.53E-06	3.93E-06	1.39E-06	8.02E-08	4.87E-10	2.66E-13
4.19E-01	3.00E+02	6.00E+02	3.68E-01	5.12E-06	4.38E-06	1.54E-06	9.74E-08	7.39E-10	5.81E-13
4.54E-01	3.00E+02	6.00E+02	3.74E-01	5.92E-06	4.98E-06	1.75E-06	1.21E-07	1.16E-09	1.34E-12
4.99E-01	3.00E+02	6.00E+02	3.81E-01	7.00E-06	5.78E-06	2.02E-06	1.54E-07	1.88E-09	3.20E-12
5.55E-01	3.00E+02	6.00E+02	3.90E-01	8.48E-06	6.85E-06	2.38E-06	2.01E-07	3.10E-09	7.82E-12
6.24E-01	3.00E+02	6.00E+02	4.01E-01	1.05E-05	8.31E-06	2.87E-06	2.67E-07	5.20E-09	1.92E-11
7.11E-01	3.00E+02	6.00E+02	4.15E-01	1.33E-05	1.03E-05	3.54E-06	3.60E-07	8.73E-09	4.62E-11
8.20E-01	3.00E+02	6.00E+02	4.32E-01	1.72E-05	1.30E-05	4.44E-06	4.90E-07	1.46E-08	1.08E-10
9.55E-01	3.00E+02	6.00E+02	4.53E-01	2.25E-05	1.66E-05	5.64E-06	6.71E-07	2.40E-08	2.39E-10
1.12E+00	3.00E+02	6.00E+02	4.79E-01	2.96E-05	2.15E-05	7.23E-06	9.16E-07	3.84E-08	4.98E-10
1.34E+00	3.00E+02	6.00E+02	5.11E-01	3.87E-05	2.77E-05	9.24E-06	1.23E-06	5.92E-08	9.64E-10
1.60E+00	3.00E+02	6.00E+02	5.51E-01	4.99E-05	3.53E-05	1.17E-05	1.63E-06	8.74E-08	1.72E-09
1.93E+00	3.01E+02	6.00E+02	5.99E-01	6.28E-05	4.40E-05	1.45E-05	2.09E-06	1.22E-07	2.79E-09
2.34E+00	3.01E+02	6.00E+02	6.59E-01	7.64E-05	5.31E-05	1.75E-05	2.57E-06	1.61E-07	4.15E-09
2.85E+00	3.01E+02	6.00E+02	7.32E-01	8.90E-05	6.17E-05	2.02E-05	3.01E-06	1.98E-07	5.60E-09
3.49E+00	3.01E+02	6.00E+02	8.22E-01	9.88E-05	6.82E-05	2.22E-05	3.36E-06	2.29E-07	6.91E-09
4.29E+00	3.01E+02	6.00E+02	9.32E-01	1.04E-04	7.16E-05	2.33E-05	3.54E-06	2.47E-07	7.82E-09
5.29E+00	3.02E+02	6.00E+02	1.07E+00	1.03E-04	7.11E-05	2.31E-05	3.53E-06	2.50E-07	8.16E-09
6.53E+00	3.02E+02	6.00E+02	1.23E+00	9.73E-05	6.69E-05	2.17E-05	3.33E-06	2.38E-07	7.92E-09
8.08E+00	3.02E+02	6.00E+02	1.44E+00	8.69E-05	5.98E-05	1.94E-05	2.97E-06	2.14E-07	7.21E-09
1.00E+01	3.03E+02	6.00E+02	1.69E+00	7.39E-05	5.08E-05	1.65E-05	2.53E-06	1.83E-07	6.20E-09
1.24E+01	3.04E+02	6.00E+02	2.00E+00	6.01E-05	4.13E-05	1.34E-05	2.06E-06	1.49E-07	5.07E-09

1.55E+01	3.05E+02	6.00E+02	2.39E+00	4.70E-05	3.23E-05	1.05E-05	1.61E-06	1.16E-07	3.97E-09
1.92E+01	3.06E+02	6.00E+02	2.87E+00	3.55E-05	2.44E-05	7.91E-06	1.21E-06	8.78E-08	3.00E-09
2.39E+01	3.07E+02	6.00E+02	3.46E+00	2.60E-05	1.78E-05	5.79E-06	8.89E-07	6.44E-08	2.20E-09
2.98E+01	3.09E+02	6.00E+02	4.20E+00	1.86E-05	1.28E-05	4.14E-06	6.35E-07	4.60E-08	1.57E-09
3.72E+01	3.11E+02	6.00E+02	5.12E+00	1.30E-05	8.95E-06	2.91E-06	4.46E-07	3.23E-08	1.10E-09
4.63E+01	3.14E+02	6.00E+02	6.28E+00	9.02E-06	6.20E-06	2.01E-06	3.09E-07	2.24E-08	7.65E-10
5.78E+01	3.17E+02	6.00E+02	7.72E+00	6.18E-06	4.25E-06	1.38E-06	2.12E-07	1.53E-08	5.24E-10
7.20E+01	3.21E+02	6.00E+02	9.51E+00	4.21E-06	2.89E-06	9.39E-07	1.44E-07	1.04E-08	3.57E-10
8.99E+01	3.26E+02	6.00E+02	1.17E+01	2.84E-06	1.96E-06	6.35E-07	9.73E-08	7.05E-09	2.41E-10
1.12E+02	3.33E+02	6.00E+02	1.45E+01	1.92E-06	1.32E-06	4.27E-07	6.55E-08	4.75E-09	1.62E-10
1.40E+02	3.41E+02	6.00E+02	1.80E+01	1.29E-06	8.84E-07	2.87E-07	4.40E-08	3.19E-09	1.09E-10
1.75E+02	3.51E+02	6.00E+02	2.23E+01	8.61E-07	5.92E-07	1.92E-07	2.95E-08	2.13E-09	7.31E-11
2.18E+02	3.64E+02	6.00E+02	2.76E+01	5.76E-07	3.96E-07	1.29E-07	1.97E-08	1.43E-09	4.89E-11
2.72E+02	3.79E+02	6.00E+02	3.42E+01	3.85E-07	2.65E-07	8.59E-08	1.32E-08	9.55E-10	3.27E-11
3.39E+02	3.99E+02	6.00E+02	4.23E+01	2.57E-07	1.77E-07	5.74E-08	8.81E-09	6.38E-10	2.18E-11
4.24E+02	4.24E+02	6.00E+02	5.23E+01	1.72E-07	1.18E-07	3.84E-08	5.89E-09	4.26E-10	1.46E-11
5.29E+02	4.54E+02	6.00E+02	6.46E+01	1.15E-07	7.91E-08	2.57E-08	3.94E-09	2.85E-10	9.76E-12
6.60E+02	4.93E+02	6.00E+02	7.97E+01	7.71E-08	5.30E-08	1.72E-08	2.64E-09	1.91E-10	6.54E-12
8.24E+02	5.40E+02	6.00E+02	9.81E+01	5.18E-08	3.56E-08	1.16E-08	1.77E-09	1.28E-10	4.39E-12
1.03E+03	6.00E+02	6.00E+02	1.20E+02	3.49E-08	2.40E-08	7.78E-09	1.19E-09	8.64E-11	2.96E-12
1.29E+03	6.74E+02	6.07E+02	1.48E+02	2.26E-08	1.56E-08	5.05E-09	7.75E-10	5.61E-11	1.92E-12
1.62E+03	7.66E+02	6.21E+02	1.83E+02	1.47E-08	1.01E-08	3.28E-09	5.02E-10	3.64E-11	1.25E-12
2.06E+03	8.81E+02	6.42E+02	2.27E+02	9.53E-09	6.55E-09	2.13E-09	3.26E-10	2.36E-11	8.08E-13

1

time averaged (tav = 3600. s) volume concentration: maximum concentration (volume fraction) along centerline.

downwind distance x (m)	height z (m)	maximum concentration c(x,0,z)	time of max conc (s)	cloud duration (s)
-3.05E-01	0.00E+00	0.00E+00	3.00E+02	6.00E+02
-2.44E-01	0.00E+00	2.05E-03	3.00E+02	6.00E+02
-1.83E-01	0.00E+00	2.53E-03	3.00E+02	6.00E+02
-1.22E-01	0.00E+00	2.87E-03	3.00E+02	6.00E+02
-6.10E-02	0.00E+00	3.12E-03	3.00E+02	6.00E+02
7.63E-17	0.00E+00	3.34E-03	3.00E+02	6.00E+02
6.10E-02	0.00E+00	3.52E-03	3.00E+02	6.00E+02
1.22E-01	0.00E+00	3.68E-03	3.00E+02	6.00E+02
1.83E-01	0.00E+00	3.82E-03	3.00E+02	6.00E+02
2.44E-01	0.00E+00	3.95E-03	3.00E+02	6.00E+02
3.05E-01	0.00E+00	4.07E-03	3.00E+02	6.00E+02
3.13E-01	0.00E+00	4.04E-03	3.00E+02	6.00E+02
3.22E-01	0.00E+00	3.99E-03	3.00E+02	6.00E+02
3.34E-01	0.00E+00	3.94E-03	3.00E+02	6.00E+02
3.49E-01	0.00E+00	3.89E-03	3.00E+02	6.00E+02
3.67E-01	0.00E+00	3.83E-03	3.00E+02	6.00E+02
3.90E-01	0.00E+00	3.75E-03	3.00E+02	6.00E+02
4.19E-01	0.00E+00	3.66E-03	3.00E+02	6.00E+02
4.54E-01	0.00E+00	3.54E-03	3.00E+02	6.00E+02
4.99E-01	0.00E+00	3.41E-03	3.00E+02	6.00E+02
5.55E-01	0.00E+00	3.25E-03	3.00E+02	6.00E+02

6.24E-01	0.00E+00	3.07E-03	3.00E+02	6.00E+02
7.11E-01	0.00E+00	2.85E-03	3.00E+02	6.00E+02
8.20E-01	0.00E+00	2.62E-03	3.00E+02	6.00E+02
9.55E-01	0.00E+00	2.36E-03	3.00E+02	6.00E+02
1.12E+00	0.00E+00	2.09E-03	3.00E+02	6.00E+02
1.34E+00	0.00E+00	1.81E-03	3.00E+02	6.00E+02
1.60E+00	0.00E+00	1.53E-03	3.00E+02	6.00E+02
1.93E+00	0.00E+00	1.27E-03	3.01E+02	6.00E+02
2.34E+00	0.00E+00	1.03E-03	3.01E+02	6.00E+02
2.85E+00	0.00E+00	8.18E-04	3.01E+02	6.00E+02
3.49E+00	0.00E+00	6.37E-04	3.01E+02	6.00E+02
4.29E+00	0.00E+00	4.87E-04	3.01E+02	6.00E+02
5.29E+00	0.00E+00	3.65E-04	3.02E+02	6.00E+02
6.53E+00	0.00E+00	2.69E-04	3.02E+02	6.00E+02
8.08E+00	0.00E+00	1.95E-04	3.02E+02	6.00E+02
1.00E+01	0.00E+00	1.40E-04	3.03E+02	6.00E+02
1.24E+01	0.00E+00	9.84E-05	3.04E+02	6.00E+02
1.55E+01	0.00E+00	6.85E-05	3.05E+02	6.00E+02
1.92E+01	0.00E+00	4.72E-05	3.06E+02	6.00E+02
2.39E+01	0.00E+00	3.22E-05	3.07E+02	6.00E+02
2.98E+01	0.00E+00	2.18E-05	3.09E+02	6.00E+02
3.72E+01	0.00E+00	1.47E-05	3.11E+02	6.00E+02
4.63E+01	0.00E+00	9.85E-06	3.14E+02	6.00E+02
5.78E+01	0.00E+00	6.60E-06	3.17E+02	6.00E+02
7.20E+01	0.00E+00	4.41E-06	3.21E+02	6.00E+02
8.99E+01	0.00E+00	2.95E-06	3.26E+02	6.00E+02
1.12E+02	0.00E+00	1.97E-06	3.33E+02	6.00E+02
1.40E+02	0.00E+00	1.31E-06	3.41E+02	6.00E+02
1.75E+02	0.00E+00	8.74E-07	3.51E+02	6.00E+02
2.18E+02	0.00E+00	5.82E-07	3.64E+02	6.00E+02
2.72E+02	0.00E+00	3.88E-07	3.79E+02	6.00E+02
3.39E+02	0.00E+00	2.59E-07	3.99E+02	6.00E+02
4.24E+02	0.00E+00	1.73E-07	4.24E+02	6.00E+02
5.29E+02	0.00E+00	1.15E-07	4.54E+02	6.00E+02
6.60E+02	0.00E+00	7.73E-08	4.93E+02	6.00E+02
8.24E+02	0.00E+00	5.19E-08	5.40E+02	6.00E+02
1.03E+03	0.00E+00	3.49E-08	6.00E+02	6.00E+02
1.29E+03	0.00E+00	2.27E-08	6.74E+02	6.07E+02
1.62E+03	0.00E+00	1.47E-08	7.66E+02	6.21E+02
2.06E+03	0.00E+00	9.54E-09	8.81E+02	6.42E+02

INPUT DATA FILE NAME : C:\CALPINE\IEEC\TEMP\HOSE3.SLB
OUTPUT LIST FILE NAME : C:\CALPINE\IEEC\TEMP\HOSE3.LST

problem input

```
idspl =        1
ncalc =        1
wms   =  0.017031
cps   =   2093.65
tbp   =    239.70
cmed0 =      1.00
dhe   =  1370837.
cpsl  =   4956.39
rhosl =    639.00
spb   =   2132.50
spc   =    -32.98
ts    =    298.16
qs    =      0.00
as    =      0.37
tsd   =      600.
qtis  =      0.00
hs    =      0.00
tav   =   1800.00
xffm  =   2000.00
zp(1) =      1.50
zp(2) =      0.00
zp(3) =      0.00
zp(4) =      0.00
z0    =  0.100000
za    =     10.00
ua    =      3.00
ta    =    298.16
rh    =     50.00
stab  =      4.00
```

release gas properties

```
molecular weight of source gas (kg)          - wms  =  1.7031E-02
vapor heat capacity, const. p.  (j/kg-k)     - cps  =  2.0937E+03
temperature of source gas (k)                - ts   =  2.3970E+02
density of source gas (kg/m3)                - rhos =  8.6589E-01
boiling point temperature                    - tbp  =  2.3970E+02
liquid mass fraction                         - cmed0=  0.0000E+00
liquid heat capacity (j/kg-k)                - cpsl =  4.9564E+03
heat of vaporization (j/kg)                  - dhe  =  1.3708E+06
liquid source density (kg/m3)                - rhosl=  6.3900E+02
saturation pressure constant                 - spa  =  1.0316E+01
saturation pressure constant (k)             - spb  =  2.1325E+03
```

saturation pressure constant (k)	- spc	=	-3.2980E+01

spill characteristics

spill type	- idspl	=	1
mass source rate (kg/s)	- qs	=	3.4800E-03
continuous source duration (s)	- tsd	=	6.0000E+02
continuous source mass (kg)	- qtcs	=	2.0880E+00
instantaneous source mass (kg)	- qtis	=	0.0000E+00
source area (m2)	- as	=	3.7200E-01
vertical vapor velocity (m/s)	- ws	=	1.0804E-02
source half width (m)	- bs	=	3.0496E-01
source height (m)	- hs	=	0.0000E+00
horizontal vapor velocity (m/s)	- us	=	0.0000E+00

field parameters

concentration averaging time (s)	- tav	=	1.8000E+03
mixing layer height (m)	- hmx	=	1.0400E+03
maximum downwind distrace (m)	- xffm	=	2.0000E+03
concentration measurement height (m)	- zp(1)	=	1.5000E+00
	- zp(2)	=	0.0000E+00
	- zp(3)	=	0.0000E+00
	- zp(4)	=	0.0000E+00

ambient meteorological properties

molecular weight of ambient air (kg)	- wmae	=	2.8780E-02
heat capacity of ambient air at const p. (j/kg-k)	- cpaa	=	1.0145E+03
density of ambient air (kg/m3)	- rhoa	=	1.1763E+00
ambient measurement height (m)	- za	=	1.0000E+01
ambient atmospheric pressure (pa=n/m2=j/m3)	- pa	=	1.0133E+05
ambient wind speed (m/s)	- ua	=	3.0000E+00
ambient temperature (k)	- ta	=	2.9816E+02
relative humidity (percent)	- rh	=	5.0000E+01
ambient friction velocity (m/s)	- uastr	=	2.6764E-01
atmospheric stability class value	- stab	=	4.0000E+00
inverse monin-obukhov length (1/m)	- ala	=	0.0000E+00
surface roughness height (m)	- z0	=	1.0000E-01

additional parameters

sub-step multiplier	- ncalc	=	1
number of calculational sub-steps	- nssm	=	3
acceleration of gravity (m/s2)	- grav	=	9.8066E+00
gas constant (j/mol- k)	- rr	=	8.3143E+00
von karman constant	- xk	=	4.1000E-01

instantaneous spatially averaged cloud parameters

x	zc	h	bb	b	bbx	bx	cv	rho	t	u	ua
-3.05E-01	0.00E+00	0.00E+00	3.05E-01	3.05E-01	3.05E-01	3.05E-01	0.00E+00	1.18E+00	2.98E+02	0.00E+00	0.00E+00
-2.44E-01	0.00E+00	2.78E-01	3.12E-01	3.05E-01	3.36E-01	3.36E-01	8.70E-03	1.17E+00	2.98E+02	3.31E-01	3.34E-01
-1.83E-01	0.00E+00	3.56E-01	3.15E-01	3.05E-01	3.66E-01	3.66E-01	1.07E-02	1.17E+00	2.97E+02	4.18E-01	4.25E-01
-1.22E-01	0.00E+00	4.13E-01	3.19E-01	3.05E-01	3.97E-01	3.97E-01	1.19E-02	1.17E+00	2.97E+02	4.77E-01	4.88E-01
-6.10E-02	0.00E+00	4.62E-01	3.22E-01	3.05E-01	4.28E-01	4.28E-01	1.28E-02	1.17E+00	2.97E+02	5.22E-01	5.38E-01
7.63E-17	0.00E+00	5.05E-01	3.26E-01	3.05E-01	4.59E-01	4.59E-01	1.36E-02	1.17E+00	2.97E+02	5.58E-01	5.80E-01
6.10E-02	0.00E+00	5.44E-01	3.29E-01	3.05E-01	4.89E-01	4.89E-01	1.42E-02	1.17E+00	2.97E+02	5.89E-01	6.16E-01
1.22E-01	0.00E+00	5.81E-01	3.33E-01	3.05E-01	5.20E-01	5.20E-01	1.46E-02	1.17E+00	2.97E+02	6.16E-01	6.48E-01
1.83E-01	0.00E+00	6.16E-01	3.37E-01	3.05E-01	5.51E-01	5.51E-01	1.51E-02	1.17E+00	2.97E+02	6.39E-01	6.78E-01
2.44E-01	0.00E+00	6.48E-01	3.41E-01	3.05E-01	5.81E-01	5.81E-01	1.54E-02	1.17E+00	2.97E+02	6.59E-01	7.04E-01
3.05E-01	0.00E+00	6.80E-01	3.44E-01	3.05E-01	6.12E-01	6.12E-01	1.57E-02	1.17E+00	2.97E+02	6.77E-01	7.29E-01
3.13E-01	1.89E-06	6.85E-01	3.45E-01	3.05E-01	6.20E-01	6.20E-01	1.56E-02	1.17E+00	2.97E+02	6.78E-01	7.33E-01
3.22E-01	9.43E-06	6.89E-01	3.45E-01	3.05E-01	6.29E-01	6.29E-01	1.54E-02	1.17E+00	2.97E+02	6.82E-01	7.36E-01
3.34E-01	2.66E-05	6.93E-01	3.46E-01	3.05E-01	6.41E-01	6.41E-01	1.51E-02	1.17E+00	2.97E+02	6.86E-01	7.39E-01
3.49E-01	5.96E-05	6.97E-01	3.49E-01	3.05E-01	6.56E-01	6.56E-01	1.49E-02	1.17E+00	2.97E+02	6.90E-01	7.42E-01
3.67E-01	1.18E-04	7.02E-01	3.51E-01	3.05E-01	6.75E-01	6.75E-01	1.45E-02	1.17E+00	2.97E+02	6.96E-01	7.46E-01
3.90E-01	2.15E-04	7.09E-01	3.54E-01	3.05E-01	6.98E-01	6.98E-01	1.41E-02	1.17E+00	2.97E+02	7.03E-01	7.51E-01
4.19E-01	3.73E-04	7.17E-01	3.59E-01	3.05E-01	7.27E-01	7.27E-01	1.36E-02	1.17E+00	2.97E+02	7.11E-01	7.57E-01
4.54E-01	6.19E-04	7.27E-01	3.64E-01	3.05E-01	7.63E-01	7.63E-01	1.31E-02	1.17E+00	2.97E+02	7.20E-01	7.64E-01
4.99E-01	9.96E-04	7.40E-01	3.70E-01	3.05E-01	8.08E-01	8.08E-01	1.25E-02	1.17E+00	2.97E+02	7.32E-01	7.73E-01
5.55E-01	1.56E-03	7.55E-01	3.77E-01	3.05E-01	8.64E-01	8.64E-01	1.17E-02	1.17E+00	2.97E+02	7.46E-01	7.84E-01
6.24E-01	2.38E-03	7.74E-01	3.87E-01	3.05E-01	9.34E-01	9.34E-01	1.09E-02	1.17E+00	2.98E+02	7.62E-01	7.97E-01
7.11E-01	3.55E-03	7.97E-01	3.98E-01	3.05E-01	1.02E+00	1.02E+00	1.01E-02	1.17E+00	2.98E+02	7.82E-01	8.13E-01
8.20E-01	5.19E-03	8.25E-01	4.12E-01	3.05E-01	1.13E+00	1.13E+00	9.12E-03	1.17E+00	2.98E+02	8.04E-01	8.32E-01
9.55E-01	7.42E-03	8.59E-01	4.30E-01	3.05E-01	1.27E+00	1.27E+00	8.15E-03	1.17E+00	2.98E+02	8.30E-01	8.54E-01
1.12E+00	1.04E-02	9.01E-01	4.50E-01	3.05E-01	1.44E+00	1.44E+00	7.16E-03	1.17E+00	2.98E+02	8.60E-01	8.80E-01
1.34E+00	1.43E-02	9.51E-01	4.76E-01	3.05E-01	1.65E+00	1.65E+00	6.18E-03	1.17E+00	2.98E+02	8.94E-01	9.11E-01
1.60E+00	1.92E-02	1.01E+00	5.06E-01	3.05E-01	1.92E+00	1.92E+00	5.24E-03	1.17E+00	2.98E+02	9.31E-01	9.45E-01
1.93E+00	2.53E-02	1.08E+00	5.42E-01	3.05E-01	2.25E+00	2.25E+00	4.37E-03	1.18E+00	2.98E+02	9.73E-01	9.85E-01
2.34E+00	3.27E-02	1.17E+00	5.85E-01	3.05E-01	2.66E+00	2.66E+00	3.58E-03	1.18E+00	2.98E+02	1.02E+00	1.03E+00
2.85E+00	4.14E-02	1.27E+00	6.36E-01	3.05E-01	3.18E+00	3.18E+00	2.88E-03	1.18E+00	2.98E+02	1.07E+00	1.08E+00
3.49E+00	5.17E-02	1.39E+00	6.97E-01	3.05E-01	3.82E+00	3.82E+00	2.29E-03	1.18E+00	2.98E+02	1.13E+00	1.13E+00
4.29E+00	6.33E-02	1.54E+00	7.69E-01	3.05E-01	4.63E+00	4.63E+00	1.79E-03	1.18E+00	2.98E+02	1.18E+00	1.19E+00
5.29E+00	7.64E-02	1.71E+00	8.53E-01	3.05E-01	5.63E+00	5.63E+00	1.38E-03	1.18E+00	2.98E+02	1.25E+00	1.25E+00
6.53E+00	9.08E-02	1.91E+00	9.53E-01	3.05E-01	6.88E+00	6.88E+00	1.05E-03	1.18E+00	2.98E+02	1.32E+00	1.32E+00
8.08E+00	1.07E-01	2.14E+00	1.07E+00	3.05E-01	8.45E+00	8.45E+00	7.87E-04	1.18E+00	2.98E+02	1.39E+00	1.39E+00
1.00E+01	1.23E-01	2.42E+00	1.21E+00	3.05E-01	1.04E+01	1.04E+01	5.84E-04	1.18E+00	2.98E+02	1.46E+00	1.46E+00
1.24E+01	1.41E-01	2.75E+00	1.37E+00	3.05E-01	1.28E+01	1.28E+01	4.30E-04	1.18E+00	2.98E+02	1.54E+00	1.54E+00
1.55E+01	1.60E-01	3.14E+00	1.57E+00	3.05E-01	1.59E+01	1.59E+01	3.13E-04	1.18E+00	2.98E+02	1.62E+00	1.62E+00
1.92E+01	1.79E-01	3.60E+00	1.80E+00	3.05E-01	1.97E+01	1.97E+01	2.26E-04	1.18E+00	2.98E+02	1.71E+00	1.71E+00
2.39E+01	1.99E-01	4.15E+00	2.07E+00	3.05E-01	2.44E+01	2.44E+01	1.61E-04	1.18E+00	2.98E+02	1.80E+00	1.80E+00
2.98E+01	2.20E-01	4.80E+00	2.40E+00	3.05E-01	3.04E+01	3.04E+01	1.14E-04	1.18E+00	2.98E+02	1.89E+00	1.89E+00
3.72E+01	2.41E-01	5.56E+00	2.81E+00	3.05E-01	3.78E+01	3.77E+01	8.05E-05	1.18E+00	2.98E+02	1.98E+00	1.98E+00
4.63E+01	2.61E-01	6.44E+00	3.33E+00	3.05E-01	4.70E+01	4.70E+01	5.62E-05	1.18E+00	2.98E+02	2.08E+00	2.08E+00
5.78E+01	2.82E-01	7.46E+00	3.96E+00	3.05E-01	5.85E+01	5.85E+01	3.90E-05	1.18E+00	2.98E+02	2.17E+00	2.17E+00
7.20E+01	3.03E-01	8.65E+00	4.75E+00	3.05E-01	7.29E+01	7.29E+01	2.68E-05	1.18E+00	2.98E+02	2.27E+00	2.27E+00
8.99E+01	3.23E-01	1.00E+01	5.74E+00	3.05E-01	9.08E+01	9.08E+01	1.84E-05	1.18E+00	2.98E+02	2.36E+00	2.36E+00

1.12E+02	3.44E-01	1.17E+01	6.97E+00	3.05E-01	1.13E+02	1.13E+02	1.25E-05	1.18E+00	2.98E+02	2.46E+00	2.46E+00
1.40E+02	3.64E-01	1.36E+01	8.49E+00	3.05E-01	1.41E+02	1.41E+02	8.50E-06	1.18E+00	2.98E+02	2.55E+00	2.55E+00
1.75E+02	3.83E-01	1.58E+01	1.04E+01	3.05E-01	1.76E+02	1.76E+02	5.75E-06	1.18E+00	2.98E+02	2.65E+00	2.65E+00
2.18E+02	4.03E-01	1.84E+01	1.27E+01	3.05E-01	2.20E+02	2.20E+02	3.88E-06	1.18E+00	2.98E+02	2.75E+00	2.75E+00
2.72E+02	4.22E-01	2.15E+01	1.56E+01	3.05E-01	2.74E+02	2.74E+02	2.62E-06	1.18E+00	2.98E+02	2.85E+00	2.85E+00
3.39E+02	4.38E-01	2.51E+01	1.92E+01	3.05E-01	3.42E+02	3.42E+02	1.76E-06	1.18E+00	2.98E+02	2.95E+00	2.95E+00
4.24E+02	4.52E-01	2.93E+01	2.36E+01	3.05E-01	4.27E+02	4.27E+02	1.18E-06	1.18E+00	2.98E+02	3.05E+00	3.05E+00
5.29E+02	4.63E-01	3.43E+01	2.90E+01	3.05E-01	5.33E+02	5.33E+02	7.97E-07	1.18E+00	2.98E+02	3.15E+00	3.15E+00
6.60E+02	4.72E-01	4.02E+01	3.57E+01	3.05E-01	6.65E+02	6.65E+02	5.37E-07	1.18E+00	2.98E+02	3.25E+00	3.25E+00
8.24E+02	4.79E-01	4.71E+01	4.37E+01	3.05E-01	8.30E+02	8.30E+02	3.62E-07	1.18E+00	2.98E+02	3.35E+00	3.35E+00
1.03E+03	4.85E-01	5.53E+01	5.36E+01	3.05E-01	1.04E+03	1.04E+03	2.44E-07	1.18E+00	2.98E+02	3.45E+00	3.45E+00
1.29E+03	4.90E-01	6.68E+01	6.57E+01	3.05E-01	1.09E+03	1.04E+03	1.58E-07	1.18E+00	2.98E+02	3.57E+00	3.57E+00
1.62E+03	4.94E-01	8.06E+01	8.07E+01	3.05E-01	1.15E+03	1.04E+03	1.01E-07	1.18E+00	2.98E+02	3.69E+00	3.69E+00
2.06E+03	4.97E-01	9.71E+01	9.91E+01	3.05E-01	1.22E+03	1.04E+03	6.37E-08	1.18E+00	2.98E+02	3.81E+00	3.81E+00

1

x	cm	cmv	cmda	cmw	cmwv	wc	vg	ug	w	v	vx
-3.05E-01	0.00E+00	0.00E+00	9.90E-01	1.03E-02	1.03E-02	0.00E+00	0.00E+00	0.00E+00	7.47E-01	9.76E-02	0.00E+00
-2.44E-01	5.16E-03	5.16E-03	9.85E-01	1.03E-02	1.03E-02	0.00E+00	0.00E+00	0.00E+00	6.00E-01	1.09E-02	1.74E-01
-1.83E-01	6.33E-03	6.33E-03	9.83E-01	1.02E-02	1.02E-02	0.00E+00	0.00E+00	0.00E+00	4.82E-01	1.38E-02	1.98E-01
-1.22E-01	7.09E-03	7.09E-03	9.83E-01	1.02E-02	1.02E-02	0.00E+00	0.00E+00	0.00E+00	4.29E-01	1.59E-02	2.13E-01
-6.10E-02	7.64E-03	7.64E-03	9.82E-01	1.02E-02	1.02E-02	0.00E+00	0.00E+00	0.00E+00	3.96E-01	1.75E-02	2.24E-01
7.63E-17	8.07E-03	8.07E-03	9.82E-01	1.02E-02	1.02E-02	0.00E+00	0.00E+00	0.00E+00	3.72E-01	1.89E-02	2.32E-01
6.10E-02	8.43E-03	8.43E-03	9.81E-01	1.02E-02	1.02E-02	0.00E+00	0.00E+00	0.00E+00	3.53E-01	2.02E-02	2.39E-01
1.22E-01	8.72E-03	8.72E-03	9.81E-01	1.02E-02	1.02E-02	0.00E+00	0.00E+00	0.00E+00	3.38E-01	2.13E-02	2.45E-01
1.83E-01	8.96E-03	8.96E-03	9.81E-01	1.02E-02	1.02E-02	0.00E+00	0.00E+00	0.00E+00	3.26E-01	2.23E-02	2.51E-01
2.44E-01	9.17E-03	9.17E-03	9.81E-01	1.02E-02	1.02E-02	0.00E+00	0.00E+00	0.00E+00	3.15E-01	2.32E-02	2.55E-01
3.05E-01	9.35E-03	9.35E-03	9.80E-01	1.02E-02	1.02E-02	0.00E+00	0.00E+00	0.00E+00	3.05E-01	2.41E-02	2.59E-01
3.13E-01	9.26E-03	9.26E-03	9.81E-01	1.02E-02	1.02E-02	3.37E-04	0.00E+00	0.00E+00	3.04E-01	2.43E-02	2.60E-01
3.22E-01	9.15E-03	9.15E-03	9.81E-01	1.02E-02	1.02E-02	7.47E-04	0.00E+00	0.00E+00	3.03E-01	2.44E-02	2.61E-01
3.34E-01	9.01E-03	9.01E-03	9.81E-01	1.02E-02	1.02E-02	1.24E-03	0.00E+00	0.00E+00	3.02E-01	2.44E-02	2.61E-01
3.49E-01	8.84E-03	8.84E-03	9.81E-01	1.02E-02	1.02E-02	1.84E-03	0.00E+00	0.00E+00	3.01E-01	2.45E-02	2.62E-01
3.67E-01	8.64E-03	8.64E-03	9.81E-01	1.02E-02	1.02E-02	2.55E-03	0.00E+00	0.00E+00	2.99E-01	2.46E-02	2.62E-01
3.90E-01	8.40E-03	8.40E-03	9.81E-01	1.02E-02	1.02E-02	3.39E-03	0.00E+00	0.00E+00	2.98E-01	2.48E-02	2.63E-01
4.19E-01	8.12E-03	8.12E-03	9.82E-01	1.02E-02	1.02E-02	4.36E-03	0.00E+00	0.00E+00	2.96E-01	2.49E-02	2.64E-01
4.54E-01	7.79E-03	7.79E-03	9.82E-01	1.02E-02	1.02E-02	5.48E-03	0.00E+00	0.00E+00	2.94E-01	2.51E-02	2.65E-01
4.99E-01	7.41E-03	7.41E-03	9.82E-01	1.02E-02	1.02E-02	6.74E-03	0.00E+00	0.00E+00	2.92E-01	2.54E-02	2.67E-01
5.55E-01	6.98E-03	6.98E-03	9.83E-01	1.02E-02	1.02E-02	8.13E-03	0.00E+00	0.00E+00	2.89E-01	2.57E-02	2.69E-01
6.24E-01	6.50E-03	6.50E-03	9.83E-01	1.02E-02	1.02E-02	9.61E-03	0.00E+00	0.00E+00	2.86E-01	2.61E-02	2.71E-01
7.11E-01	5.98E-03	5.98E-03	9.84E-01	1.02E-02	1.02E-02	1.12E-02	0.00E+00	0.00E+00	2.83E-01	2.65E-02	2.74E-01
8.20E-01	5.42E-03	5.42E-03	9.84E-01	1.03E-02	1.03E-02	1.27E-02	0.00E+00	0.00E+00	2.79E-01	2.71E-02	2.77E-01
9.55E-01	4.84E-03	4.84E-03	9.85E-01	1.03E-02	1.03E-02	1.42E-02	0.00E+00	0.00E+00	2.75E-01	2.78E-02	2.81E-01
1.12E+00	4.25E-03	4.25E-03	9.85E-01	1.03E-02	1.03E-02	1.55E-02	0.00E+00	0.00E+00	2.71E-01	2.86E-02	2.85E-01
1.34E+00	3.67E-03	3.67E-03	9.86E-01	1.03E-02	1.03E-02	1.66E-02	0.00E+00	0.00E+00	2.66E-01	2.96E-02	2.90E-01
1.60E+00	3.11E-03	3.11E-03	9.87E-01	1.03E-02	1.03E-02	1.74E-02	0.00E+00	0.00E+00	2.60E-01	3.07E-02	2.95E-01
1.93E+00	2.59E-03	2.59E-03	9.87E-01	1.03E-02	1.03E-02	1.79E-02	0.00E+00	0.00E+00	2.54E-01	3.20E-02	3.01E-01
2.34E+00	2.12E-03	2.12E-03	9.88E-01	1.03E-02	1.03E-02	1.80E-02	0.00E+00	0.00E+00	2.47E-01	3.34E-02	3.07E-01
2.85E+00	1.71E-03	1.71E-03	9.88E-01	1.03E-02	1.03E-02	1.78E-02	0.00E+00	0.00E+00	2.39E-01	3.50E-02	3.13E-01
3.49E+00	1.35E-03	1.35E-03	9.88E-01	1.03E-02	1.03E-02	1.73E-02	0.00E+00	0.00E+00	2.31E-01	3.67E-02	3.19E-01
4.29E+00	1.06E-03	1.06E-03	9.89E-01	1.03E-02	1.03E-02	1.65E-02	0.00E+00	0.00E+00	2.23E-01	3.85E-02	3.25E-01
5.29E+00	8.15E-04	8.15E-04	9.89E-01	1.03E-02	1.03E-02	1.55E-02	0.00E+00	0.00E+00	2.14E-01	4.06E-02	3.31E-01
6.53E+00	6.20E-04	6.20E-04	9.89E-01	1.03E-02	1.03E-02	1.43E-02	0.00E+00	0.00E+00	2.06E-01	4.27E-02	3.37E-01

8.08E+00	4.66E-04	4.66E-04	9.89E-01	1.03E-02	1.03E-02	1.31E-02	0.00E+00	0.00E+00	1.98E-01	4.50E-02	3.42E-01
1.00E+01	3.46E-04	3.46E-04	9.89E-01	1.03E-02	1.03E-02	1.18E-02	0.00E+00	0.00E+00	1.91E-01	4.74E-02	3.47E-01
1.24E+01	2.54E-04	2.54E-04	9.89E-01	1.03E-02	1.03E-02	1.05E-02	0.00E+00	0.00E+00	1.83E-01	4.99E-02	3.52E-01
1.55E+01	1.85E-04	1.85E-04	9.90E-01	1.03E-02	1.03E-02	9.22E-03	0.00E+00	0.00E+00	1.76E-01	5.25E-02	3.56E-01
1.92E+01	1.34E-04	1.34E-04	9.90E-01	1.03E-02	1.03E-02	8.03E-03	0.00E+00	0.00E+00	1.69E-01	5.53E-02	3.60E-01
2.39E+01	9.55E-05	9.55E-05	9.90E-01	1.03E-02	1.03E-02	6.93E-03	0.00E+00	0.00E+00	1.63E-01	5.81E-02	3.64E-01
2.98E+01	6.77E-05	6.77E-05	9.90E-01	1.03E-02	1.03E-02	5.93E-03	0.00E+00	0.00E+00	1.56E-01	6.10E-02	3.67E-01
3.72E+01	4.76E-05	4.76E-05	9.90E-01	1.03E-02	1.03E-02	5.03E-03	0.00E+00	0.00E+00	1.51E-01	6.39E-02	3.70E-01
4.63E+01	3.33E-05	3.33E-05	9.90E-01	1.03E-02	1.03E-02	4.23E-03	0.00E+00	0.00E+00	1.45E-01	6.68E-02	3.73E-01
5.78E+01	2.31E-05	2.31E-05	9.90E-01	1.03E-02	1.03E-02	3.53E-03	0.00E+00	0.00E+00	1.40E-01	6.97E-02	3.75E-01
7.20E+01	1.59E-05	1.59E-05	9.90E-01	1.03E-02	1.03E-02	2.94E-03	0.00E+00	0.00E+00	1.35E-01	7.25E-02	3.77E-01
8.99E+01	1.09E-05	1.09E-05	9.90E-01	1.03E-02	1.03E-02	2.43E-03	0.00E+00	0.00E+00	1.31E-01	7.53E-02	3.78E-01
1.12E+02	7.41E-06	7.41E-06	9.90E-01	1.03E-02	1.03E-02	1.99E-03	0.00E+00	0.00E+00	1.26E-01	7.80E-02	3.80E-01
1.40E+02	5.03E-06	5.03E-06	9.90E-01	1.03E-02	1.03E-02	1.64E-03	0.00E+00	0.00E+00	1.22E-01	8.07E-02	3.81E-01
1.75E+02	3.41E-06	3.41E-06	9.90E-01	1.03E-02	1.03E-02	1.34E-03	0.00E+00	0.00E+00	1.18E-01	8.32E-02	3.82E-01
2.18E+02	2.30E-06	2.30E-06	9.90E-01	1.03E-02	1.03E-02	1.09E-03	0.00E+00	0.00E+00	1.15E-01	8.56E-02	3.83E-01
2.72E+02	1.55E-06	1.55E-06	9.90E-01	1.03E-02	1.03E-02	8.80E-04	0.00E+00	0.00E+00	1.11E-01	8.78E-02	3.83E-01
3.39E+02	1.04E-06	1.04E-06	9.90E-01	1.03E-02	1.03E-02	5.93E-04	0.00E+00	0.00E+00	1.08E-01	8.98E-02	3.84E-01
4.24E+02	7.01E-07	7.01E-07	9.90E-01	1.03E-02	1.03E-02	3.99E-04	0.00E+00	0.00E+00	1.04E-01	9.15E-02	3.84E-01
5.29E+02	4.72E-07	4.72E-07	9.90E-01	1.03E-02	1.03E-02	2.68E-04	0.00E+00	0.00E+00	1.01E-01	9.29E-02	3.84E-01
6.60E+02	3.18E-07	3.18E-07	9.90E-01	1.03E-02	1.03E-02	1.81E-04	0.00E+00	0.00E+00	9.79E-02	9.39E-02	3.84E-01
8.24E+02	2.14E-07	2.14E-07	9.90E-01	1.03E-02	1.03E-02	1.22E-04	0.00E+00	0.00E+00	9.48E-02	9.44E-02	3.84E-01
1.03E+03	1.45E-07	1.45E-07	9.90E-01	1.03E-02	1.03E-02	8.22E-05	0.00E+00	0.00E+00	9.17E-02	9.44E-02	3.83E-01
1.29E+03	9.32E-08	9.32E-08	9.90E-01	1.03E-02	1.03E-02	5.30E-05	0.00E+00	0.00E+00	8.81E-02	9.43E-02	3.83E-01
1.62E+03	5.96E-08	5.96E-08	9.90E-01	1.03E-02	1.03E-02	3.39E-05	0.00E+00	0.00E+00	8.46E-02	9.33E-02	3.82E-01
2.06E+03	3.77E-08	3.77E-08	9.90E-01	1.03E-02	1.03E-02	2.14E-05	0.00E+00	0.00E+00	8.11E-02	9.16E-02	3.80E-01

1

time averaged (tav = 1800. s) volume concentration: concentration contour parameters

c(x,y,z,t) = cc(x) * (erf(xa)-erf(xb)) * (erf(ya)-erf(yb)) * (exp(-za*za)+exp(-zb*zb))

```
c(x,y,z,t) = concentration (volume fraction) at (x,y,z,t)
         x = downwind distance (m)
         y = crosswind horizontal distance (m)
         z = height (m)
         t = time (s)

       erf = error functon
        xa = (x-xc+bx)/(sr2*betax)
        xb = (x-xc-bx)/(sr2*betax)
        ya = (y+b)/(sr2*betac)
        yb = (y-b)/(sr2*betac)
       exp = exponential function
        za = (z-zc)/(sr2*sig)
        zb = (z+zc)/(sr2*sig)
       sr2 = sqrt(2.0)
```

x	cc(x)	b(x)	betac(x)	zc(x)	sig(x)	t	xc(t)	bx(t)	betax(t)
-3.05E-01	0.00E+00	3.05E-01	2.49E-03	0.00E+00	0.00E+00	3.26E-01	0.00E+00	3.05E-01	2.49E-03
-2.44E-01	1.53E-03	3.05E-01	3.68E-02	0.00E+00	1.61E-01	3.84E-01	3.05E-02	3.36E-01	2.74E-03
-1.83E-01	1.90E-03	3.05E-01	4.62E-02	0.00E+00	2.05E-01	4.42E-01	6.10E-02	3.66E-01	2.99E-03

-1.22E-01	2.15E-03	3.05E-01	5.44E-02	0.00E+00	2.39E-01
-6.10E-02	2.35E-03	3.05E-01	6.19E-02	0.00E+00	2.67E-01
7.63E-17	2.52E-03	3.05E-01	6.90E-02	0.00E+00	2.91E-01
6.10E-02	2.66E-03	3.05E-01	7.57E-02	0.00E+00	3.14E-01
1.22E-01	2.79E-03	3.05E-01	8.21E-02	0.00E+00	3.35E-01
1.83E-01	2.91E-03	3.05E-01	8.84E-02	0.00E+00	3.55E-01
2.44E-01	3.02E-03	3.05E-01	9.45E-02	0.00E+00	3.74E-01
3.05E-01	3.12E-03	3.05E-01	1.01E-01	0.00E+00	3.93E-01
3.13E-01	3.10E-03	3.05E-01	1.01E-01	1.89E-06	3.96E-01
3.22E-01	3.07E-03	3.05E-01	1.02E-01	9.43E-06	3.98E-01
3.34E-01	3.03E-03	3.05E-01	1.04E-01	2.66E-05	4.00E-01
3.49E-01	3.00E-03	3.05E-01	1.06E-01	5.96E-05	4.02E-01
3.67E-01	2.95E-03	3.05E-01	1.10E-01	1.18E-04	4.05E-01
3.90E-01	2.90E-03	3.05E-01	1.14E-01	2.15E-04	4.09E-01
4.19E-01	2.84E-03	3.05E-01	1.19E-01	3.73E-04	4.14E-01
4.54E-01	2.77E-03	3.05E-01	1.25E-01	6.19E-04	4.19E-01
4.99E-01	2.69E-03	3.05E-01	1.32E-01	9.96E-04	4.26E-01
5.55E-01	2.60E-03	3.05E-01	1.40E-01	1.56E-03	4.35E-01
6.24E-01	2.49E-03	3.05E-01	1.50E-01	2.38E-03	4.45E-01
7.11E-01	2.37E-03	3.05E-01	1.62E-01	3.55E-03	4.58E-01
8.20E-01	2.25E-03	3.05E-01	1.77E-01	5.19E-03	4.73E-01
9.55E-01	2.11E-03	3.05E-01	1.94E-01	7.42E-03	4.92E-01
1.12E+00	1.97E-03	3.05E-01	2.13E-01	1.04E-02	5.14E-01
1.34E+00	1.82E-03	3.05E-01	2.37E-01	1.43E-02	5.41E-01
1.60E+00	1.67E-03	3.05E-01	2.65E-01	1.92E-02	5.73E-01
1.93E+00	1.52E-03	3.05E-01	2.98E-01	2.53E-02	6.11E-01
2.34E+00	1.37E-03	3.05E-01	3.37E-01	3.27E-02	6.57E-01
2.85E+00	1.24E-03	3.05E-01	3.84E-01	4.14E-02	7.11E-01
3.49E+00	1.10E-03	3.05E-01	4.41E-01	5.17E-02	7.75E-01
4.29E+00	9.83E-04	3.05E-01	5.08E-01	6.33E-02	8.51E-01
5.29E+00	8.71E-04	3.05E-01	5.90E-01	7.64E-02	9.41E-01
6.53E+00	7.68E-04	3.05E-01	6.90E-01	9.08E-02	1.05E+00
8.08E+00	6.75E-04	3.05E-01	8.12E-01	1.07E-01	1.17E+00
1.00E+01	5.91E-04	3.05E-01	9.61E-01	1.23E-01	1.33E+00
1.24E+01	5.15E-04	3.05E-01	1.14E+00	1.41E-01	1.50E+00
1.55E+01	4.47E-04	3.05E-01	1.37E+00	1.60E-01	1.72E+00
1.92E+01	3.87E-04	3.05E-01	1.65E+00	1.79E-01	1.97E+00
2.39E+01	3.33E-04	3.05E-01	1.99E+00	1.99E-01	2.28E+00
2.98E+01	2.86E-04	3.05E-01	2.42E+00	2.20E-01	2.65E+00
3.72E+01	2.44E-04	3.05E-01	2.95E+00	2.41E-01	3.07E+00
4.63E+01	2.08E-04	3.05E-01	3.62E+00	2.61E-01	3.57E+00
5.78E+01	1.77E-04	3.05E-01	4.45E+00	2.82E-01	4.14E+00
7.20E+01	1.50E-04	3.05E-01	5.49E+00	3.03E-01	4.82E+00
8.99E+01	1.26E-04	3.05E-01	6.78E+00	3.23E-01	5.61E+00
1.12E+02	1.06E-04	3.05E-01	8.39E+00	3.44E-01	6.53E+00
1.40E+02	8.91E-05	3.05E-01	1.04E+01	3.64E-01	7.62E+00
1.75E+02	7.45E-05	3.05E-01	1.29E+01	3.83E-01	8.89E+00
2.18E+02	6.21E-05	3.05E-01	1.59E+01	4.03E-01	1.04E+01
2.72E+02	5.17E-05	3.05E-01	1.97E+01	4.22E-01	1.21E+01
3.39E+02	4.30E-05	3.05E-01	2.44E+01	4.38E-01	1.42E+01
4.24E+02	3.57E-05	3.05E-01	3.02E+01	4.52E-01	1.67E+01
5.29E+02	2.96E-05	3.05E-01	3.73E+01	4.63E-01	1.95E+01

5.08E-01	9.15E-02	3.97E-01	3.24E-03
5.74E-01	1.22E-01	4.28E-01	3.49E-03
6.47E-01	1.52E-01	4.59E-01	3.74E-03
7.20E-01	1.83E-01	4.89E-01	4.00E-03
8.00E-01	2.13E-01	5.20E-01	4.25E-03
8.80E-01	2.44E-01	5.51E-01	4.50E-03
9.67E-01	2.74E-01	5.81E-01	4.75E-03
1.05E+00	3.05E-01	6.12E-01	5.00E-03
1.08E+00	3.13E-01	6.20E-01	5.06E-03
1.10E+00	3.22E-01	6.29E-01	5.14E-03
1.14E+00	3.34E-01	6.41E-01	5.24E-03
1.18E+00	3.49E-01	6.56E-01	5.36E-03
1.23E+00	3.67E-01	6.75E-01	5.51E-03
1.30E+00	3.90E-01	6.98E-01	5.70E-03
1.38E+00	4.19E-01	7.27E-01	5.93E-03
1.48E+00	4.54E-01	7.63E-01	6.23E-03
1.60E+00	4.99E-01	8.08E-01	6.59E-03
1.75E+00	5.55E-01	8.64E-01	7.05E-03
1.94E+00	6.24E-01	9.34E-01	7.63E-03
2.16E+00	7.11E-01	1.02E+00	8.34E-03
2.44E+00	8.20E-01	1.13E+00	9.23E-03
2.77E+00	9.55E-01	1.27E+00	1.03E-02
3.17E+00	1.12E+00	1.44E+00	1.17E-02
3.65E+00	1.34E+00	1.65E+00	1.35E-02
4.23E+00	1.60E+00	1.92E+00	1.56E-02
4.92E+00	1.93E+00	2.25E+00	1.83E-02
5.74E+00	2.34E+00	2.66E+00	2.17E-02
6.72E+00	2.85E+00	3.18E+00	2.59E-02
7.89E+00	3.49E+00	3.82E+00	3.12E-02
9.27E+00	4.29E+00	4.63E+00	3.78E-02
1.09E+01	5.29E+00	5.63E+00	4.60E-02
1.28E+01	6.53E+00	6.88E+00	5.62E-02
1.51E+01	8.08E+00	8.45E+00	6.90E-02
1.79E+01	1.00E+01	1.04E+01	8.49E-02
2.11E+01	1.24E+01	1.28E+01	1.05E-01
2.49E+01	1.55E+01	1.59E+01	1.30E-01
2.94E+01	1.92E+01	1.97E+01	1.61E-01
3.48E+01	2.39E+01	2.44E+01	1.99E-01
4.12E+01	2.98E+01	3.04E+01	2.48E-01
4.87E+01	3.72E+01	3.77E+01	3.08E-01
5.78E+01	4.63E+01	4.70E+01	3.84E-01
6.85E+01	5.78E+01	5.85E+01	4.78E-01
8.14E+01	7.20E+01	7.29E+01	5.95E-01
9.68E+01	8.99E+01	9.08E+01	7.42E-01
1.15E+02	1.12E+02	1.13E+02	9.25E-01
1.37E+02	1.40E+02	1.41E+02	1.15E+00
1.64E+02	1.75E+02	1.76E+02	1.44E+00
1.96E+02	2.18E+02	2.20E+02	1.79E+00
2.35E+02	2.72E+02	2.74E+02	2.24E+00
2.81E+02	3.39E+02	3.42E+02	2.79E+00
3.37E+02	4.24E+02	4.27E+02	3.49E+00
4.05E+02	5.29E+02	5.33E+02	4.35E+00

6.60E+02	2.45E-05	3.05E-01	4.60E+01	4.72E-01	2.29E+01	4.87E+02	6.60E+02	6.65E+02	5.43E+00
8.24E+02	2.03E-05	3.05E-01	5.66E+01	4.79E-01	2.69E+01	5.86E+02	8.24E+02	8.30E+02	6.78E+00
1.03E+03	1.68E-05	3.05E-01	6.95E+01	4.85E-01	3.16E+01	7.06E+02	1.03E+03	1.04E+03	8.46E+00
1.29E+03	1.40E-05	3.05E-01	8.56E+01	4.90E-01	3.83E+01	6.74E+02	1.29E+03	1.04E+03	1.87E+02
1.62E+03	1.16E-05	3.05E-01	1.06E+02	4.94E-01	4.62E+01	7.66E+02	1.62E+03	1.04E+03	2.83E+02
2.06E+03	9.72E-06	3.05E-01	1.31E+02	4.97E-01	5.58E+01	8.81E+02	2.06E+03	1.04E+03	3.75E+02

1

time averaged (tav = 1800. s) volume concentration: concentration in the z = 1.50 plane.

downwind distance x (m)	time of max conc (s)	cloud duration (s)	effective half width bbc (m)	average concentration (volume fraction) at (x,y,z) y/bbc= 0.0	y/bbc= 0.5	y/bbc= 1.0	y/bbc= 1.5	y/bbc= 2.0	y/bbc= 2.5
-3.05E-01	3.00E+02	6.00E+02	3.05E-01	0.00E+00	0.00E+00	0.00E+00	0.00E+00	0.00E+00	0.00E+00
-2.44E-01	3.00E+02	6.00E+02	3.12E-01	4.67E-22	4.67E-22	2.00E-22	2.42E-27	0.00E+00	0.00E+00
-1.83E-01	3.00E+02	6.00E+02	3.15E-01	1.30E-14	1.30E-14	5.36E-15	1.80E-18	1.18E-26	0.00E+00
-1.22E-01	3.00E+02	6.00E+02	3.19E-01	1.49E-11	1.49E-11	5.93E-12	1.04E-14	6.58E-21	0.00E+00
-6.10E-02	3.00E+02	6.00E+02	3.23E-01	8.35E-10	8.27E-10	3.21E-10	1.52E-12	1.43E-17	1.85E-25
7.63E-17	3.00E+02	6.00E+02	3.28E-01	1.19E-08	1.16E-08	4.41E-09	4.08E-11	2.25E-15	5.34E-22
6.10E-02	3.00E+02	6.00E+02	3.32E-01	7.93E-08	7.67E-08	2.86E-08	4.26E-10	8.25E-14	1.56E-19
1.22E-01	3.00E+02	6.00E+02	3.37E-01	3.34E-07	3.18E-07	1.17E-07	2.50E-09	1.23E-12	1.07E-17
1.83E-01	3.00E+02	6.00E+02	3.41E-01	1.03E-06	9.69E-07	3.53E-07	9.94E-09	9.98E-12	2.84E-16
2.44E-01	3.00E+02	6.00E+02	3.46E-01	2.58E-06	2.38E-06	8.58E-07	3.02E-08	5.35E-11	3.86E-15
3.05E-01	3.00E+02	6.00E+02	3.51E-01	5.51E-06	4.98E-06	1.78E-06	7.54E-08	2.11E-10	3.24E-14
3.13E-01	3.00E+02	6.00E+02	3.52E-01	6.09E-06	5.49E-06	1.97E-06	8.47E-08	2.50E-10	4.17E-14
3.22E-01	3.00E+02	6.00E+02	3.53E-01	6.50E-06	5.84E-06	2.09E-06	9.23E-08	2.89E-10	5.35E-14
3.34E-01	3.00E+02	6.00E+02	3.54E-01	6.98E-06	6.25E-06	2.23E-06	1.03E-07	3.55E-10	7.71E-14
3.49E-01	3.00E+02	6.00E+02	3.57E-01	7.50E-06	6.65E-06	2.37E-06	1.17E-07	4.77E-10	1.37E-13
3.67E-01	3.00E+02	6.00E+02	3.60E-01	8.17E-06	7.18E-06	2.55E-06	1.35E-07	6.68E-10	2.60E-13
3.90E-01	3.00E+02	6.00E+02	3.63E-01	9.06E-06	7.86E-06	2.78E-06	1.60E-07	9.74E-10	5.33E-13
4.19E-01	3.00E+02	6.00E+02	3.68E-01	1.02E-05	8.76E-06	3.09E-06	1.95E-07	1.48E-09	1.16E-12
4.54E-01	3.00E+02	6.00E+02	3.74E-01	1.18E-05	9.96E-06	3.50E-06	2.42E-07	2.32E-09	2.67E-12
4.99E-01	3.00E+02	6.00E+02	3.81E-01	1.40E-05	1.16E-05	4.04E-06	3.09E-07	3.75E-09	6.40E-12
5.55E-01	3.00E+02	6.00E+02	3.90E-01	1.70E-05	1.37E-05	4.76E-06	4.02E-07	6.20E-09	1.56E-11
6.24E-01	3.00E+02	6.00E+02	4.01E-01	2.10E-05	1.66E-05	5.75E-06	5.34E-07	1.04E-08	3.83E-11
7.11E-01	3.00E+02	6.00E+02	4.15E-01	2.67E-05	2.06E-05	7.08E-06	7.19E-07	1.75E-08	9.24E-11
8.20E-01	3.00E+02	6.00E+02	4.32E-01	3.44E-05	2.60E-05	8.88E-06	9.80E-07	2.92E-08	2.15E-10
9.55E-01	3.00E+02	6.00E+02	4.53E-01	4.50E-05	3.33E-05	1.13E-05	1.34E-06	4.80E-08	4.78E-10
1.12E+00	3.00E+02	6.00E+02	4.79E-01	5.91E-05	4.29E-05	1.45E-05	1.83E-06	7.68E-08	9.97E-10
1.34E+00	3.00E+02	6.00E+02	5.11E-01	7.74E-05	5.53E-05	1.85E-05	2.47E-06	1.18E-07	1.93E-09
1.60E+00	3.00E+02	6.00E+02	5.51E-01	9.98E-05	7.05E-05	2.34E-05	3.26E-06	1.75E-07	3.43E-09
1.93E+00	3.01E+02	6.00E+02	5.99E-01	1.26E-04	8.80E-05	2.90E-05	4.17E-06	2.44E-07	5.59E-09
2.34E+00	3.01E+02	6.00E+02	6.59E-01	1.53E-04	1.06E-04	3.49E-05	5.13E-06	3.21E-07	8.29E-09
2.85E+00	3.01E+02	6.00E+02	7.32E-01	1.78E-04	1.23E-04	4.03E-05	6.02E-06	3.97E-07	1.12E-08
3.49E+00	3.01E+02	6.00E+02	8.22E-01	1.98E-04	1.36E-04	4.45E-05	6.71E-06	4.58E-07	1.38E-08
4.29E+00	3.01E+02	6.00E+02	9.32E-01	2.08E-04	1.43E-04	4.66E-05	7.08E-06	4.94E-07	1.56E-08
5.29E+00	3.02E+02	6.00E+02	1.07E+00	2.07E-04	1.42E-04	4.62E-05	7.06E-06	5.00E-07	1.63E-08
6.53E+00	3.02E+02	6.00E+02	1.23E+00	1.95E-04	1.34E-04	4.35E-05	6.65E-06	4.76E-07	1.58E-08
8.08E+00	3.02E+02	6.00E+02	1.44E+00	1.74E-04	1.20E-04	3.88E-05	5.95E-06	4.28E-07	1.44E-08
1.00E+01	3.03E+02	6.00E+02	1.69E+00	1.48E-04	1.02E-04	3.30E-05	5.06E-06	3.65E-07	1.24E-08
1.24E+01	3.04E+02	6.00E+02	2.00E+00	1.20E-04	8.26E-05	2.68E-05	4.11E-06	2.97E-07	1.01E-08

1.55E+01	3.05E+02	6.00E+02	2.39E+00	9.39E-05	6.46E-05	2.10E-05	3.21E-06	2.33E-07	7.94E-09
1.92E+01	3.06E+02	6.00E+02	2.87E+00	7.09E-05	4.87E-05	1.58E-05	2.43E-06	1.76E-07	6.00E-09
2.39E+01	3.07E+02	6.00E+02	3.46E+00	5.19E-05	3.57E-05	1.16E-05	1.78E-06	1.29E-07	4.40E-09
2.98E+01	3.09E+02	6.00E+02	4.20E+00	3.71E-05	2.55E-05	8.28E-06	1.27E-06	9.20E-08	3.15E-09
3.72E+01	3.11E+02	6.00E+02	5.12E+00	2.61E-05	1.79E-05	5.81E-06	8.91E-07	6.46E-08	2.21E-09
4.63E+01	3.14E+02	6.00E+02	6.28E+00	1.80E-05	1.24E-05	4.03E-06	6.17E-07	4.47E-08	1.53E-09
5.78E+01	3.17E+02	6.00E+02	7.72E+00	1.24E-05	8.50E-06	2.76E-06	4.23E-07	3.07E-08	1.05E-09
7.20E+01	3.21E+02	6.00E+02	9.51E+00	8.41E-06	5.78E-06	1.88E-06	2.88E-07	2.09E-08	7.14E-10
8.99E+01	3.26E+02	6.00E+02	1.17E+01	5.69E-06	3.91E-06	1.27E-06	1.95E-07	1.41E-08	4.83E-10
1.12E+02	3.33E+02	6.00E+02	1.45E+01	3.83E-06	2.63E-06	8.55E-07	1.31E-07	9.50E-09	3.25E-10
1.40E+02	3.41E+02	6.00E+02	1.80E+01	2.57E-06	1.77E-06	5.74E-07	8.80E-08	6.37E-09	2.18E-10
1.75E+02	3.51E+02	6.00E+02	2.23E+01	1.72E-06	1.18E-06	3.84E-07	5.89E-08	4.27E-09	1.46E-10
2.18E+02	3.64E+02	6.00E+02	2.76E+01	1.15E-06	7.92E-07	2.57E-07	3.94E-08	2.86E-09	9.77E-11
2.72E+02	3.79E+02	6.00E+02	3.42E+01	7.70E-07	5.29E-07	1.72E-07	2.64E-08	1.91E-09	6.53E-11
3.39E+02	3.99E+02	6.00E+02	4.23E+01	5.15E-07	3.54E-07	1.15E-07	1.76E-08	1.28E-09	4.37E-11
4.24E+02	4.24E+02	6.00E+02	5.23E+01	3.44E-07	2.36E-07	7.68E-08	1.18E-08	8.53E-10	2.92E-11
5.29E+02	4.54E+02	6.00E+02	6.46E+01	2.30E-07	1.58E-07	5.14E-08	7.88E-09	5.71E-10	1.95E-11
6.60E+02	4.93E+02	6.00E+02	7.97E+01	1.54E-07	1.06E-07	3.44E-08	5.28E-09	3.82E-10	1.31E-11
8.24E+02	5.40E+02	6.00E+02	9.81E+01	1.04E-07	7.12E-08	2.31E-08	3.54E-09	2.57E-10	8.79E-12
1.03E+03	6.00E+02	6.00E+02	1.20E+02	6.97E-08	4.79E-08	1.56E-08	2.39E-09	1.73E-10	5.92E-12
1.29E+03	6.74E+02	6.07E+02	1.48E+02	4.53E-08	3.11E-08	1.01E-08	1.55E-09	1.12E-10	3.84E-12
1.62E+03	7.66E+02	6.21E+02	1.83E+02	2.94E-08	2.02E-08	6.55E-09	1.00E-09	7.28E-11	2.49E-12
2.06E+03	8.81E+02	6.42E+02	2.27E+02	1.91E-08	1.31E-08	4.25E-09	6.52E-10	4.73E-11	1.62E-12

1

time averaged (tav = 1800. s) volume concentration: maximum concentration (volume fraction) along centerline.

downwind distance x (m)	height z (m)	maximum concentration c(x,0,z)	time of max conc (s)	cloud duration (s)
-3.05E-01	0.00E+00	0.00E+00	3.00E+02	6.00E+02
-2.44E-01	0.00E+00	4.09E-03	3.00E+02	6.00E+02
-1.83E-01	0.00E+00	5.07E-03	3.00E+02	6.00E+02
-1.22E-01	0.00E+00	5.73E-03	3.00E+02	6.00E+02
-6.10E-02	0.00E+00	6.25E-03	3.00E+02	6.00E+02
7.63E-17	0.00E+00	6.67E-03	3.00E+02	6.00E+02
6.10E-02	0.00E+00	7.04E-03	3.00E+02	6.00E+02
1.22E-01	0.00E+00	7.36E-03	3.00E+02	6.00E+02
1.83E-01	0.00E+00	7.65E-03	3.00E+02	6.00E+02
2.44E-01	0.00E+00	7.91E-03	3.00E+02	6.00E+02
3.05E-01	0.00E+00	8.14E-03	3.00E+02	6.00E+02
3.13E-01	0.00E+00	8.07E-03	3.00E+02	6.00E+02
3.22E-01	0.00E+00	7.98E-03	3.00E+02	6.00E+02
3.34E-01	0.00E+00	7.89E-03	3.00E+02	6.00E+02
3.49E-01	0.00E+00	7.78E-03	3.00E+02	6.00E+02
3.67E-01	0.00E+00	7.65E-03	3.00E+02	6.00E+02
3.90E-01	0.00E+00	7.50E-03	3.00E+02	6.00E+02
4.19E-01	0.00E+00	7.31E-03	3.00E+02	6.00E+02
4.54E-01	0.00E+00	7.09E-03	3.00E+02	6.00E+02
4.99E-01	0.00E+00	6.82E-03	3.00E+02	6.00E+02
5.55E-01	0.00E+00	6.50E-03	3.00E+02	6.00E+02

6.24E-01	0.00E+00	6.13E-03	3.00E+02	6.00E+02
7.11E-01	0.00E+00	5.71E-03	3.00E+02	6.00E+02
8.20E-01	0.00E+00	5.23E-03	3.00E+02	6.00E+02
9.55E-01	0.00E+00	4.72E-03	3.00E+02	6.00E+02
1.12E+00	0.00E+00	4.17E-03	3.00E+02	6.00E+02
1.34E+00	0.00E+00	3.61E-03	3.00E+02	6.00E+02
1.60E+00	0.00E+00	3.06E-03	3.00E+02	6.00E+02
1.93E+00	0.00E+00	2.54E-03	3.01E+02	6.00E+02
2.34E+00	0.00E+00	2.06E-03	3.01E+02	6.00E+02
2.85E+00	0.00E+00	1.64E-03	3.01E+02	6.00E+02
3.49E+00	0.00E+00	1.27E-03	3.01E+02	6.00E+02
4.29E+00	0.00E+00	9.73E-04	3.01E+02	6.00E+02
5.29E+00	0.00E+00	7.30E-04	3.02E+02	6.00E+02
6.53E+00	0.00E+00	5.38E-04	3.02E+02	6.00E+02
8.08E+00	0.00E+00	3.90E-04	3.02E+02	6.00E+02
1.00E+01	0.00E+00	2.79E-04	3.03E+02	6.00E+02
1.24E+01	0.00E+00	1.97E-04	3.04E+02	6.00E+02
1.55E+01	0.00E+00	1.37E-04	3.05E+02	6.00E+02
1.92E+01	0.00E+00	9.44E-05	3.06E+02	6.00E+02
2.39E+01	0.00E+00	6.44E-05	3.07E+02	6.00E+02
2.98E+01	0.00E+00	4.35E-05	3.09E+02	6.00E+02
3.72E+01	0.00E+00	2.93E-05	3.11E+02	6.00E+02
4.63E+01	0.00E+00	1.97E-05	3.14E+02	6.00E+02
5.78E+01	0.00E+00	1.32E-05	3.17E+02	6.00E+02
7.20E+01	0.00E+00	8.83E-06	3.21E+02	6.00E+02
8.99E+01	0.00E+00	5.90E-06	3.26E+02	6.00E+02
1.12E+02	0.00E+00	3.93E-06	3.33E+02	6.00E+02
1.40E+02	0.00E+00	2.62E-06	3.41E+02	6.00E+02
1.75E+02	0.00E+00	1.75E-06	3.51E+02	6.00E+02
2.18E+02	0.00E+00	1.16E-06	3.64E+02	6.00E+02
2.72E+02	0.00E+00	7.76E-07	3.79E+02	6.00E+02
3.39E+02	0.00E+00	5.18E-07	3.99E+02	6.00E+02
4.24E+02	0.00E+00	3.45E-07	4.24E+02	6.00E+02
5.29E+02	0.00E+00	2.31E-07	4.54E+02	6.00E+02
6.60E+02	0.00E+00	1.55E-07	4.93E+02	6.00E+02
8.24E+02	0.00E+00	1.04E-07	5.40E+02	6.00E+02
1.03E+03	0.00E+00	6.98E-08	6.00E+02	6.00E+02
1.29E+03	0.00E+00	4.53E-08	6.74E+02	6.07E+02
1.62E+03	0.00E+00	2.94E-08	7.66E+02	6.21E+02
2.06E+03	0.00E+00	1.91E-08	8.81E+02	6.42E+02

PUBLIC HEALTH RESPONSES

Workshop Request 1-5 - During the February 26, 2002 Public Health workshop, CEC staff requested, per Data Request 79, that the Applicant update the health risk summary to include the cancer risk from the "mother's milk" pathway.

Revised Response 79 - See revised Table 5.2-5 below.

Revised Table 5.2-5 Health Risk Assessment Results (Revised 3/21/02)

	New Equipment	Significance Threshold
Cancer Risk to Maximally Exposed Individual (w/o TBACT)	~~0.35~~ 0.39 in one million*	1 in one million
Cancer Risk to Maximally Exposed Individual (w/ TBACT)	~~0.35~~ 0.39 in one million*	10 in one million
Acute Noncancer Hazard Index	0.1275	1
Chronic Noncancer Hazard Index	0.029	1

Note (Table 5.2-5): * This includes the cancer risk associated with the mother's milk pathway for a 44-year rather than a 70-year exposure. The addition of the 44-yr mother's milk risk to a 70-year exposure was done at the request of the CEC staff and is not required by CAPCOA guidelines.

AIR QUALITY RESPONSES

No data requests were received from staff at the February 26th workshop concerning Air Quality.

Re-submittal of AFC Figure 5.15-2

Due to an oversight, Figure 5.15-2 did not include the following sensitive receptor:

#24 Menifee Valley Medical Center

This receptor has been added to Figure 5.15-2 and the revised figure is supplied with this submittal.