Appendix E

Generator Machine Dynamic Data

Generator dynamic data for CT 1-3:

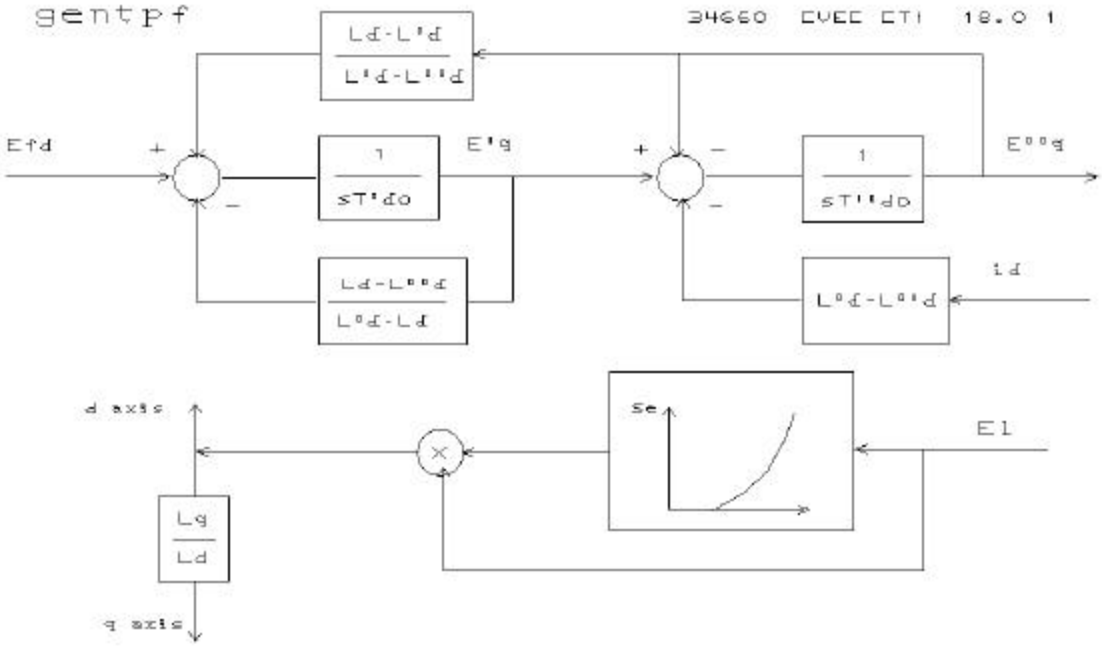

ld	2.4362	lpq	0.4482	tpdo	9.0290	s1	0.0673
lpd	0.2443	lppq	0.1857	tppdo	0.0440	s12	0.2416
lppd	0.1878	ll	0.1456	tpqo	1.0000	h	5.6900
lq	0.2357	ra	0.0010	tppqo	0.0810	d	0.0000

Generator excitation system data for CT 1-3:

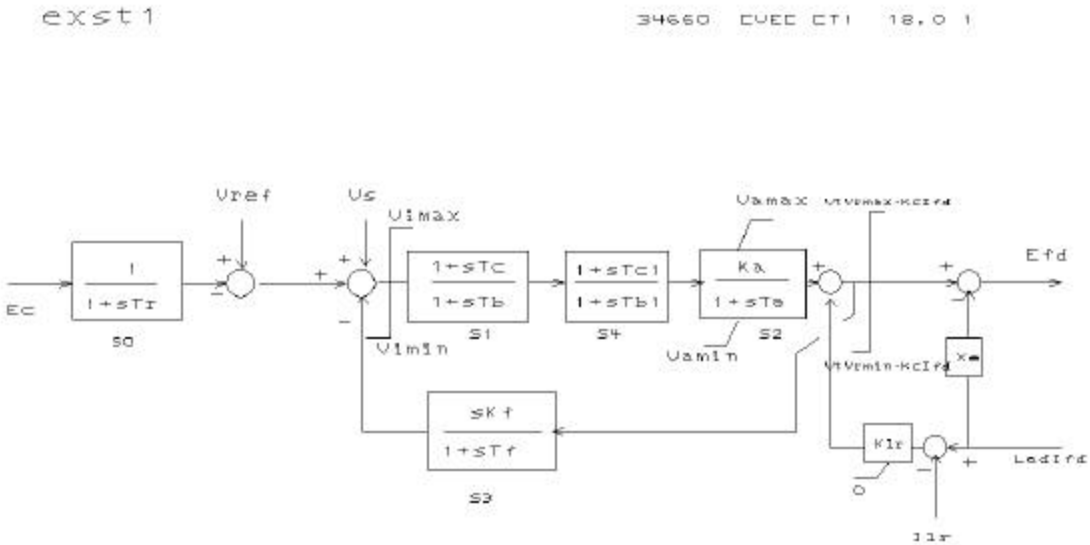

tr	0.0000	tb	8.0000	vrmin	-5.8260	tc1	1.0000
vimax	0.1700	ka	250.0000	kc	0.1130	tb1	1.0000
vimin	-0.1700	ta	0.0200	kf	0.0000	vamax	99.0000
tc	1.0000	vrmax	6.4730	tf	1.0000	vamin	-99.0000

Generator PSS data for CT 1-3:

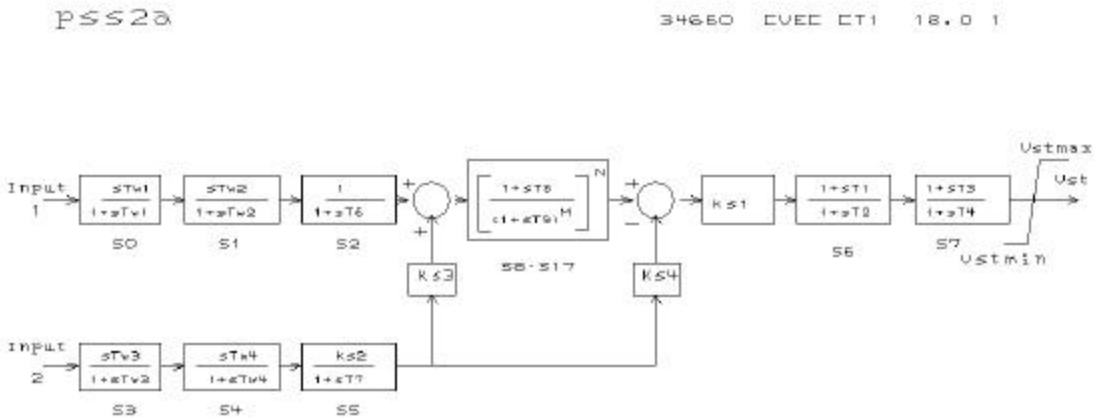

j1	1.0000	tw1	2.0000	t6	0.0000	ks4	1.0000
k1	34660.0000	tw2	2.0000	t7	2.0000	t8	0.5000
j2	3.0000	tw3	2.0000	ks2	0.2100	t9	0.1000
k2	34660.0000	tw4	0.0000	ks3	1.0000	n	1.0000

Generator governor/turbine data for CT 1-3:

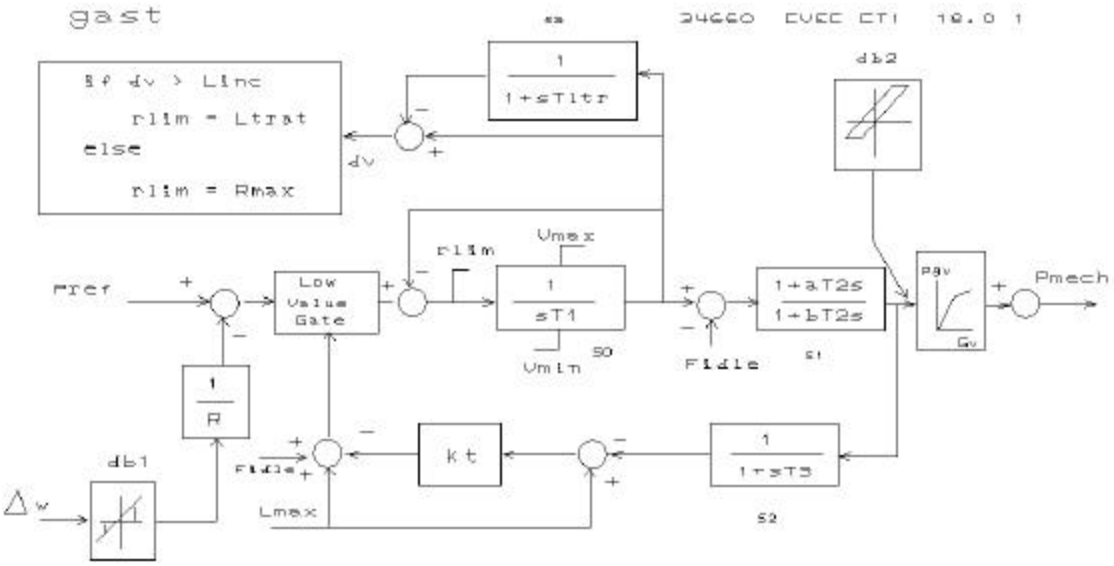

r	0.0400	lmax	1.0000	dturb	0.0000	tltr	99.0000
t1	0.5100	kt	3.0000	fidle	0.0000	ltrat	99.0000
t2	0.2000	vmax	1.3000	rmax	99.0000	a	0.0000
t3	3.0000	vmin	-0.0500	linc	99.0000	b	1.0000

Generator data for ST:

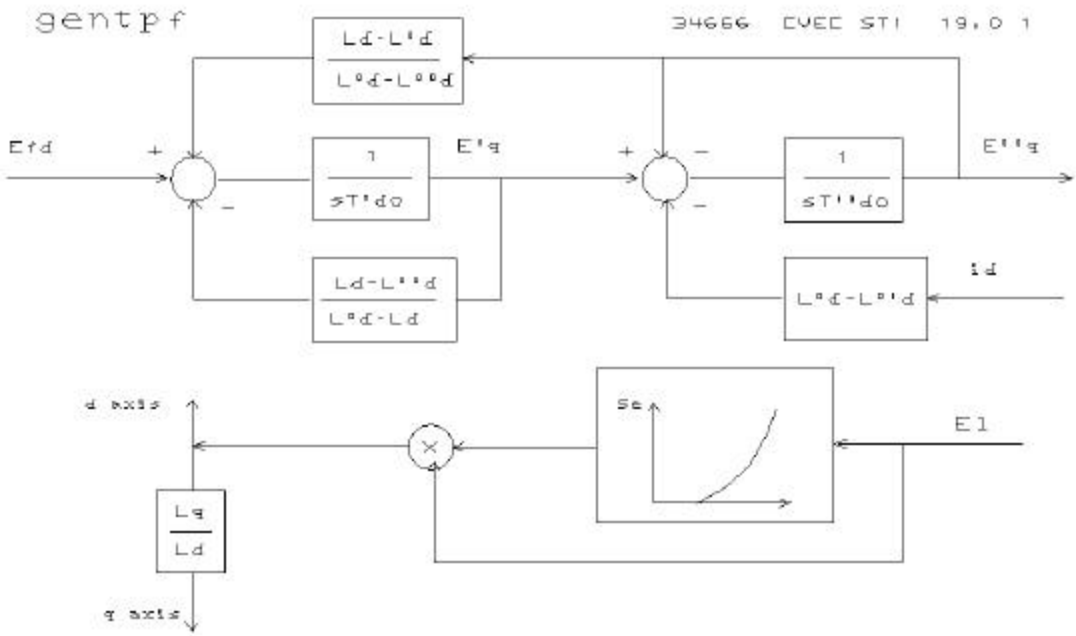

ld	2.0688	lpq	0.5434	tpdo	5.4890	s1	0.0489
lpd	0.3613	lppq	0.2717	tppdo	0.0440	s12	0.0909
lppd	0.2748	ll	0.2014	tpqo	0.6100	h	5.6900
lq	2.0333	ra	0.0015	tppqo	0.0670	d	0.0000

Generator excitation system data for ST:

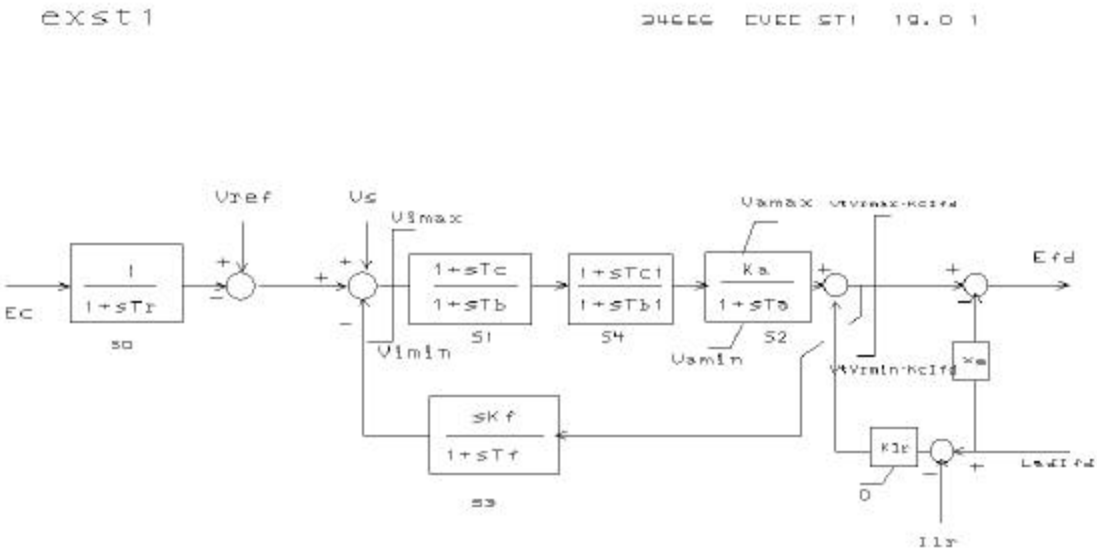

tr	0.0000	tb	8.0000	vrmin	-4.6970	tc1	1.0000
vimax	0.1700	ka	250.0000	kc	0.1080	tb1	1.0000
vimin	-0.1700	ta	0.0200	kf	0.0000	vamax	99.0000
tc	1.0000	vrmax	5.2190	tf	1.0000	vamin	-99.0000

Generator PSS data for ST:

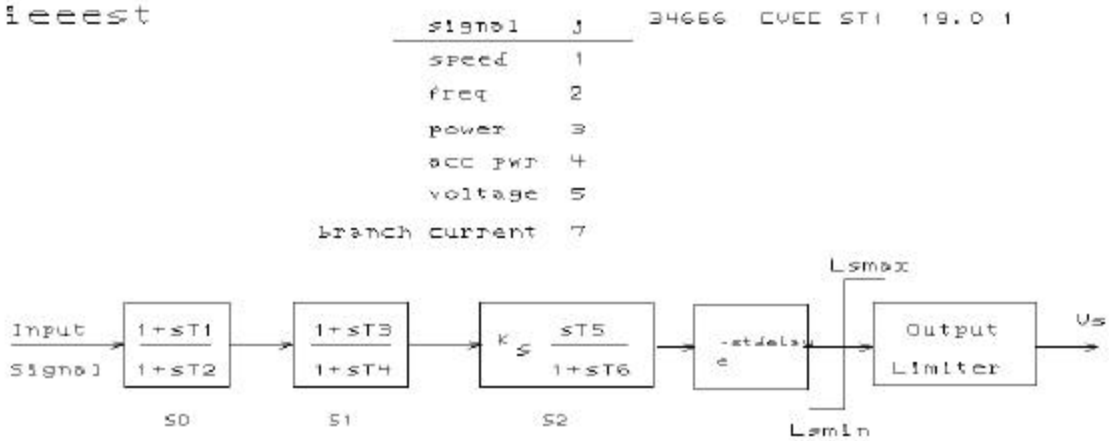

j	3.0000	a3	0.0000	t1	0.1500	t5	2.0000
k	0.0000	a4	0.0000	t2	0.2500	t6	2.0000
a1	0.0000	a5	0.0000	t3	0.0000	ks	-0.8000
a2	0.0000	a6	0.0000	t4	0.0300	lsmax	0.1000

Generator governor/turbine data for ST:

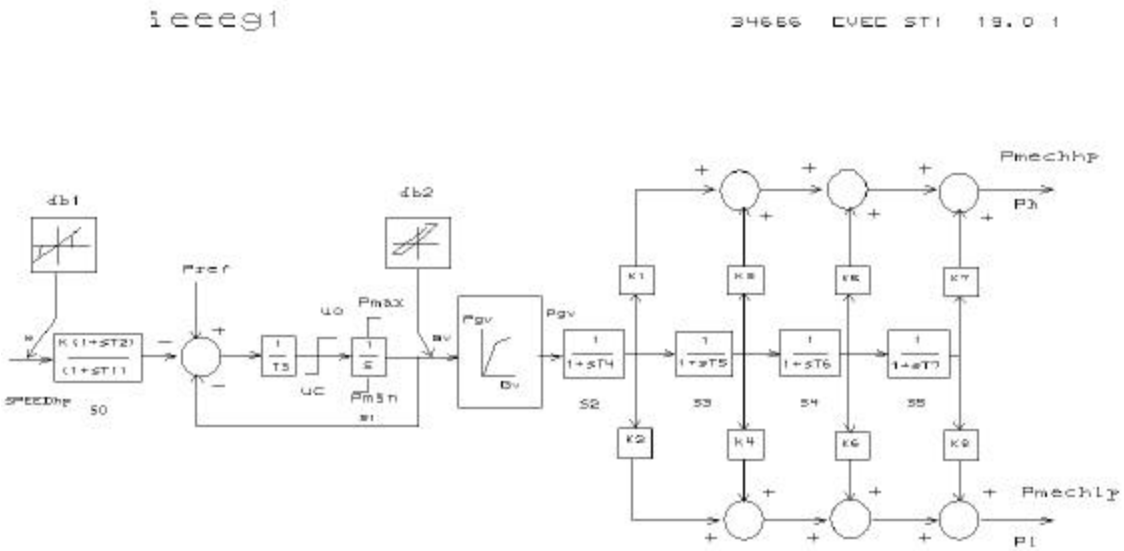

k	20.0000	uo	0.3800	t4	0.4500	k3	0.3300
t1	0.0000	uc	-0.3800	k1	0.2100	k4	0.0000
t2	0.0000	pmax	1.0000	k2	0.0000	t6	0.1000
t3	1.1500	pmin	0.0000	t5	3.0000	k5	0.4600