JOINT APPENDICES

for the

2005 BUILDING ENERGY EFFICIENCY STANDARDS
FOR RESIDENTIAL AND NONRESIDENTIAL BUILDINGS

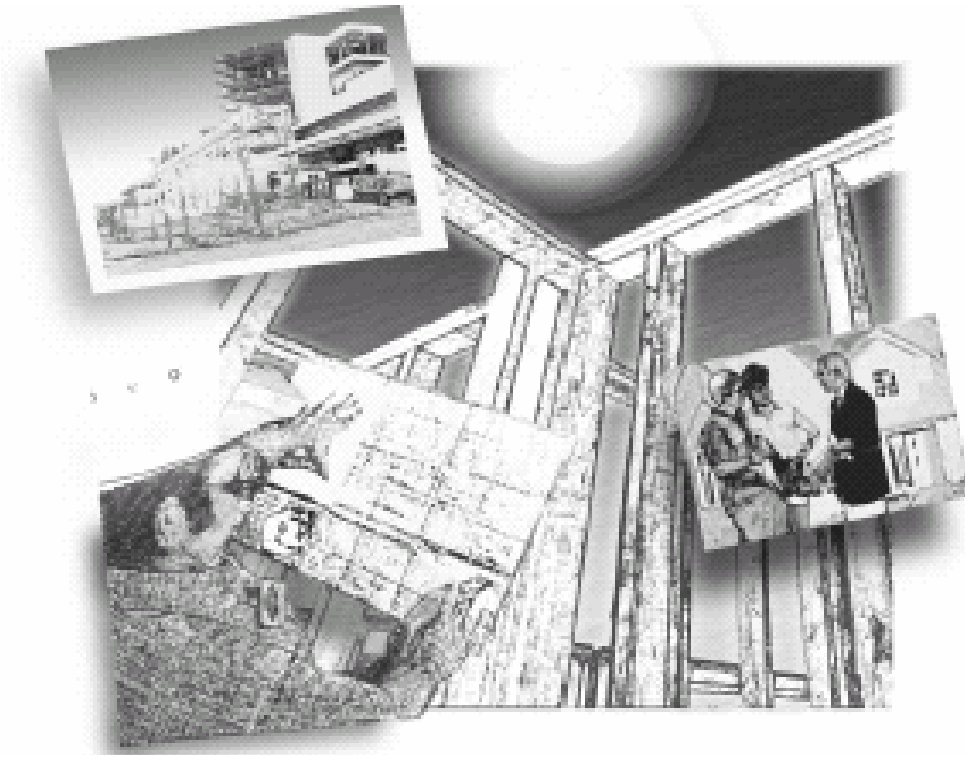

Effective Date October 1, 2005

CALIFORNIA ENERGY COMMISSION

STANDARDS/REGULATIONS

OCTOBER 2004
P400-03-001JAF

Arnold Schwarzenegger, *Governor*

CALIFORNIA ENERGY COMMISSION

William J. Keese,
Chairman

Commissioners:
Arthur H. Rosenfeld
James D. Boyd
John L. Geesman
Jackalyne Pfannenstiel

Robert L. Therkelsen,
Executive Director

G. William Pennington,
Manager
BUILDINGS AND APPLIANCES OFFICE

Valerie T. Hall,
Deputy Director
ENERGY EFFICIENCY AND DEMAND ANALYSIS DIVISION

NOTICE

This version of the 2005 Joint Appendices for the Building Energy Efficiency Standards is a final "unmarked" version; that is, it contains no underlined or struck-out text showing changes made through the 45-day review period, the 15-day review period, and adopted errata. A marked version is available on the Energy Commission's website or in hard copy from the Commission's Buildings and Appliances Office. Visit www.energy.ca.gov/title24, call the Title 24 Energy Efficiency hotline at 800/772-3300 (toll-free from within California) or 916/654-5106, or send email to title24@energy.state.ca.us.

Note that this is a new separate document introduced in the 2005 Standards.

TABLE OF CONTENTS

I. Joint Appendix I – Glossary ……. Pages I-1 – I-42

II. Joint Appendix II – Reference Weather/Climate Data …… Pages II-1 – II-62

III. Joint Appendix III – Time Dependent Valuation …….. Pages III-1 – III-7

IV. Joint Appendix IV – U-factor, C-factor, and Thermal Mass Data … Pages IV-1 – IV-57

JOINT APPENDIX I

Glossary

NOTE: THIS NEW APPENDIX IS A CONSOLIDATION OF THE DEFINITIONS/GLOSSARY INFORMATION FROM SECTIONS 10-102 AND 101 OF THE 2005 STANDARDS, AS WELL AS THE FORMER RESIDENTIAL ACM MANUAL APPENDIX H, NONRESIDENTIAL ACM APPENDIX D, RESIDENTIAL MANUAL APPENDIX G, AND NONRESIDENTIAL MANUAL APPENDIX G FROM THE 2001 DOCUMENTS.

Term	Definition
ACCA	is the Air Conditioning Contractors of America.
ACCA MANUAL J	is the Air Conditioning Contractors of America document entitled "Manual J - Residential Load Calculation, Eighth Edition" (2003).
ACCENT (LIGHT)	is a directional luminaire designed to highlight or spotlight objects. It can be recessed, surface mounted, or mounted to a pendant, stem or track.
ACCEPTANCE REQUIREMENTS FOR CODE COMPLIANCE	is a description of test procedures in the Nonresidential ACM Manual that includes equipment and systems to be tested, functions to be tested, conditions under which the test shall be performed, the scope of the tests, results to be obtained and measurable criteria for acceptable performance.
ACCESSIBLE	is having access thereto, but which first may require removal or opening of access panels, doors, or similar obstructions.
ACM	See *Alternative Calculation Method*.
ACP	See *Alternative Component Package*.
ADDITION	is any change to a building that increases conditioned floor area and conditioned volume. Addition is also any change that increases the floor area or volume of an unconditioned building of an occupancy group or type regulated by Part 6. Addition is also any change that increases the illuminated area of an outdoor lighting application regulated by Part 6. See *Newly Conditioned Space*
AFUE	See *Annual Fuel Utilization Efficiency.*
AGRICULTURAL BUILDING	is a structure designed and constructed to house farm implements, hay, grain, poultry, livestock or other horticultural products. It is not a structure that is a place of human habitation, a place of employment where agricultural products are processed, treated or packaged, or a place used by the public.
AIR POROSITY	is a measure of the air-tightness of infiltration barriers in units of cubic feet per hour per square foot per inch of mercury pressure difference.

Term	Definition
AIRFLOW ACROSS THE EVAPORATOR	is the rate of airflow, usually measured in cfm across a heating or cooling coil. The efficiency of air conditioners and heat pumps is affected by the airflow across the evaporator (or condenser in the case of a heat pump). See *Thermostatic Expansion Valves (TXV)*.
AIR-TO-AIR HEAT EXCHANGER	is a device which will reduce the heat losses or gains which occur when a building is mechanically ventilated, by transferring heat between the conditioned air being exhausted and the unconditioned air being supplied.
ALTERATION	is any change to a building's water heating system, space conditioning system, lighting system, or building envelope that is not an addition.
ALTERNATIVE CALCULATION METHOD APPROVAL MANUAL OR ACM MANUAL	is the Alternative Calculation Method (ACM) Approval Manual for the 2001 Energy Efficiency Standards for Nonresidential Buildings, (P400-01-011) for nonresidential buildings, hotels, and multi-family residential buildings with four or more stories and the Alternative Calculation Method (ACM) Approval Manual for the 2001 Energy Efficiency Standards for Residential Buildings, (P400-01-012) for all single family and low-rise multi-family residential buildings.
ALTERNATIVE CALCULATION METHODS (ACMS)	are the Commission's Public Domain Computer Programs, one of the Commission's Simplified Calculation Methods, or any other calculation method approved by the Commission.
ALTERNATIVE COMPONENT PACKAGE	is one of the sets of low-rise residential prescriptive requirements contained in § 151(f). Each package is a set of measures that achieve a level of performance, which meets the standards. These are often referred to as the prescriptive packages or packages. "Buildings that comply with the prescriptive standards shall be designed, constructed and equipped to meet all of the requirements of one of the alternative packages of components shown in Tables 151-B and 151-C for the appropriate climate zone..."
ANNUAL FUEL UTILIZATION EFFICIENCY (AFUE)	is a measure of the percentage of heat from the combustion of gas or oil which is transferred to the space being heated during a year, as determined using the applicable test method in the Appliance Efficiency Regulations or Section 112.
ANNUNCIATED	is a type of visual signaling device that indicates the on, off, or other status of a load.
ANSI	is the American National Standards Institute.
ANSI Z21.10.3	is the American National Standards Institute document entitled “Gas Water Heaters, Volume I, Storage Water Heaters with input ratings above 75,000 Btu per hour,” 2001 (ANSI Z21.10.3-2001).
ANSI Z21.13	is the American National Standards Institute document entitled “Gas-Fired Low Pressure Steam and Hot Water Boilers,” 2000 (ANSI Z21.13-2000).

Term	Definition
ANSI Z21.40.4	is the American National Standards Institute document entitled "Performance Testing and Rating of Gas-Fired, Air Conditioning and Heat Pump Appliances," 1996 (ANSI Z21.40.4-1996).
ANSI Z21.47	is the American National Standards Institute document entitled "Gas-Fired Central Furnaces," 2001 (ANSI Z21.47-2001).
ANSI Z83.8	is the American National Standards Institute document entitled "Gas Unit Heaters and Gas-Fired Duct Furnaces," 2002 (ANSI Z83.8 -2002).
APPLIANCE EFFICIENCY REGULATIONS	are the regulations in Title 20, Section 1601 et seq. of the California Code of Regulations.
APPLIANCE STANDARDS	are the Standards contained in the Appliance Efficiency Regulations.
APPROVED	as to a home energy rating provider or home energy rating system, is reviewed and approved by the Commission under Title 20, Section 1675 of the California Code of Regulations.
APPROVED BY THE COMMISSION	means approval under 25402.1 of the Public Resources Code.
APPROVED CALCULATION METHOD	is a Public Domain Computer Program approved under Section 10-109 (a), or any Alternative Calculation Method approved under Section 10-109 (b). See *Alternative Calculation Method.* .
AREAL HEAT CAPACITY	See *Heat Capacity.*
ARI	is the Air-Conditioning and Refrigeration Institute.
ARI 210/240	is the Air-conditioning and Refrigeration Institute document entitled "Unitary Air-Conditioning and Air-Source Heat Pump Equipment," 2003 (ARI 210/240-94).
ARI 310/380	is the Air-conditioning and Refrigeration Institute document entitled "Packaged Terminal Air-Conditioners and Heat Pumps," 1993 (ARI 310/380-93).
ARI 320	is the Air-conditioning and Refrigeration Institute document entitled "Water-Source Heat Pumps," 1998 (ARI 320-98).
ARI 325	is the Air-conditioning and Refrigeration Institute document entitled "Ground Water-Source Heat Pumps," 1998 (ARI 325-98).
ARI 340/360	is the Air-conditioning and Refrigeration Institute document entitled "Commercial and Industrial Unitary Air-Conditioning and Heat Pump Equipment," 2000 (ARI 340/360-2000).
ARI 365	is the Air-conditioning and Refrigeration Institute document entitled, "Commercial and Industrial Unitary Air-Conditioning Condensing Units," 2002 (ARI 365-2002).
ARI 460	is the Air-conditioning and Refrigeration Institute document entitled "Remote Mechanical-Draft Air-Cooled Refrigerant Condensers," 2000 (ARI 460-2000).

Term	Definition
ARI 550/590	is the Air-conditioning and Refrigeration Institute document entitled “Standard for Water Chilling Packages Using the Vapor Compression Cycle,” 1998 (ARI 550/590-98).
ARI 560	is the Air-conditioning and Refrigeration Institute document entitled “Absorption Water Chilling and Water Heating Packages,” 2000 (ARI 560-2000).
ASHRAE	is the American Society of Heating, Refrigerating and Air-Conditioning Engineers.
ASHRAE 55	is the American Society of Heating, Refrigerating and Air-Conditioning Engineers document entitled " Thermal Environmental Conditions for Human Occupancy,” 1992 (ASHRAE Standard 55-1992).
ASHRAE CLIMATIC DATA FOR REGION X	is the American Society of Heating, Refrigerating and Air-Conditioning Engineers document entitled "ASHRAE Climatic Data for Region X, Arizona, California, Hawaii and Nevada,” Publication SPCDX, 1982 and “Supplement,” 1994.
ASHRAE HANDBOOK, APPLICATIONS VOLUME	is the American Society of Heating, Refrigerating and Air-Conditioning Engineers document entitled "ASHRAE Handbook: Heating, Ventilating, and Air-Conditioning Applications" (2003).
ASHRAE HANDBOOK, EQUIPMENT VOLUME	is the American Society of Heating, Refrigerating and Air-Conditioning Engineers document entitled "ASHRAE Handbook: Heating, Ventilating, and Air-Conditioning Systems and Equipment" (2000).
ASHRAE HANDBOOK, FUNDAMENTALS VOLUME	is the American Society of Heating, Refrigerating and Air-Conditioning Engineers document entitled "ASHRAE Handbook: Fundamentals" (2001).
ASME	is the American Society of Mechanical Engineers.
ASTM	is the American Society for Testing and Materials.
ASTM C55	is the American Society for Testing and Materials document entitled “Standard Specification for Concrete Brick,” 2001 (ASTM C55-01).
ASTM C177	is the American Society for Testing and Materials document entitled “Standard Test Method for Steady-State Heat Flux Measurements and Thermal Transmission Properties by Means of the Guarded-Hot-Plate Apparatus,” 1997 (ASTM C177-97).
ASTM C272	is the American Society for Testing and Materials document entitled “Standard Test Method for Water Absorption of Core Materials for Structural Sandwich Constructions,” 2001 (ASTM C272-01).
ASTM C335	is the American Society for Testing and Materials document entitled “Standard Test Method for Steady-State Heat Transfer Properties of Horizontal Pipe Insulation,” 1995 (ASTM C335-95).

Term	Definition
ASTM C518	is the American Society for Testing and Materials document entitled “Standard Test Method for Steady-State Thermal Transmission Properties by Means of the Heat Flow Meter Apparatus,” 2002 (ASTM C518-02).
ASTM C731	is the American Society for Testing and Materials document entitled “Standard Test Method for Extrudability, After Package Aging of Latex Sealants,” 2000 (ASTM C731-00).
ASTM C732	is the American Society for Testing and Materials document entitled “Standard Test Method for Aging Effects of Artificial Weathering on Latex Sealants,” 2001 (ASTM C732-01).
ASTM C1167	is the American Society for Testing and Materials document entitled “Standard Specification for Clay Roof Tiles,” 1996 (ASTM C1167-96).
ASTM C1371	is the American Society for Testing and Materials document entitled “Standard Test Method for Determination of Emittance of Materials Near Room Temperature Using Portable Emissometers,” 1998 (ASTM C1371-98).
ASTM D822	is the American Society of Testing and Materials document entitled, “Standard Practice for Filtered Open-Flame Carbon-Arc Exposures of Paint and Related Coatings,” 2001 (ASTM D822-01).
ASTM D1003	is the American Society for Testing and Materials document entitled “Standard Test Method for Haze and Luminous Transmittance of Transparent Plastics,” 2000 (ANSI/ASTM D1003-00).
ASTM D2824	is the American Society of Testing and Materials document entitled “Standard Specification for Aluminum-Pigmented Asphalt Roof Coatings, Nonfibered, Asbestos Fibered, and Fibered without Asbestos,” 2002 (ASTM D2824-02).
ASTM D3805	is the American Society of Testing and Materials document entitled “Standard Guide for Application of Aluminum-Pigmented Asphalt Roof Coatings,” 1997 [ASTM D3805-97 (reapproved 2003)].
ASTM D6848	Is the American Society of Testing and Materials document entitled, “Standard Specification for Aluminum-Pigmented Emulsified Asphalt Used as a Protective Coating for Roofing Asphalt Roof Coatings,” 2002 (ASTM D6848-02).
ASTM E96	is the American Society for Testing and Materials document entitled “Standard Test Methods for Water Vapor Transmission of Materials,” 2000 (ASTM E96-00).
ASTM E283	is the American Society for Testing and Materials document entitled “Standard Test Method for Determining the Rate of Air Leakage Through Exterior Windows, Curtain Walls, and Doors Under Specified Pressure Differences Across the Specimen,” 1991 [ASTM E283-91(1999)].

Term	Definition
ASTM E408	is the American Society for Testing and Materials document entitled, “Standard Test Methods for Total Normal Emittance of Surfaces Using Inspection-Meter Techniques,” 1971 [ASTM E408-71(2002)].
ATRIUM	is a large-volume space created by openings connecting two or more stories and is used for purposes other than an enclosed stairway, an elevator hoistway, an escalator opening, or as a utility shaft for plumbing, electrical, air-conditioning or other equipment, and is not a mall.
ATTIC	is an enclosed unconditioned space directly below the roof and above the ceiling.
AUDITORIUM:	See *Occupancy Type*.
AUTO REPAIR:	See *Occupancy Type*.
AUTOMATIC	is capable of operating without human intervention.
AUTOMATIC MULTI-LEVEL DAYLIGHTING CONTROL	is a multi-level lighting control that automatically reduces lighting in multiple steps or continuous dimming in response to available daylight. This control uses one or more photocontrols to detect changes in daylight illumination and then change the electric lighting level in response to the daylight changes.
AUTOMATIC TIME SWITCH CONTROL DEVICES	are devices capable of automatically turning loads off and on based on time schedules.
BACK	is the back side of the building as one faces the front facade from the outside (see *Front*). This designation is used on the Certificate of Compliance (CF-1R form) to indicate the orientation of fenestration (e.g., Back-West).
BATHROOM	is a room containing a shower, tub, toilet or a sink that is used for personal hygiene.
BELOW GRADE WALL	is the portion of a wall, enclosing conditioned space, that is below the grade line.
BRITISH THERMAL UNIT (BTU)	is the amount of heat needed to raise the temperature of one pound of water one degree Fahrenheit.
BTU/H	is the amount of heat in Btu that is removed or added during one hour. Used for measuring heating and cooling equipment output.
BUILDER	is the general contractor responsible for construction
BUILDING	is any structure or space for which a permit is sought.
BUILDING DEPARTMENT	is the city, county or state agency responsible for approving the plans, issuing a building permit and approving occupancy of the dwelling unit.
BUILDING ENERGY EFFICIENCY STANDARDS	are the California Building Energy Efficiency Standards as set forth in the California Code of Regulations, Title 24, Part 6. Also known as the *California Energy Code.*
BUILDING ENTRANCE	See *Outdoor Lighting*

Term	Definition
BUILDING ENVELOPE	is the ensemble of exterior and demising partitions of a building that enclose conditioned space.
BUILDING FAÇADE	See *Outdoor Lighting*
BUILDING LOCATION DATA	is the specific outdoor design temperatures shown in Joint Appendix II used in calculating heating and cooling loads for the particular location of the building . For heating, the outdoor design temperature shall be the Winter Median of Extremes value. A higher temperature may be used, but lower values are not permitted. For low-rise residential buildings for cooling, the outdoor design temperatures shall be the 1.0 percent Cooling Dry Bulb and Mean Coincident Wet Bulb values. Lower temperatures may be used, but higher values are not permitted. Temperatures are interpolated from the 0.5% and 2.0% values in the ASHRAE publication, *Climatic Data for Region X,* 1982 edition and 1994 supplement (see Joint Appendix II). For nonresidential buildings, high-rise residential buildings and hotels/motels for cooling, the outdoor design temperatures shall be the 0.5 percent Cooling Dry Bulb and Mean Coincident Wet Bulb. For cooling towers the outdoor design temperatures shall be the 0.5 percent Cooling Design Wet Bulb values. Lower temperatures may be used, but higher values are not permitted. If a building location is not listed, the local enforcement agency may determine the location for which outdoor design temperature data is available that is closest to the actual building site.
BUILDING OWNER	is the owner of the building or dwelling unit.
BUILDING PERMIT	is an electrical, plumbing, mechanical, building, or other permit or approval, that is issued by an enforcement agency, and that authorizes any construction that is subject to Part 6.
BUILDING TYPES	is the classification of buildings defined by the *CBC* and applicable to the requirements of the *Energy Efficiency Standards.*
CABINET SIGN	See *Sign*
CALIFORNIA ENERGY CODE	See *Building Energy Efficiency Standards*
CANOPY	See *Outdoor Lighting*
CAPTIVE-KEY OVERRIDE	is a type of lighting control in which the key that activates the override cannot be released when the lights are in the on position.
CBC	CBC is the 2001 California Building Code.
CEILING	is the interior upper surface of a space separating it from an attic, plenum, indirectly or directly conditioned space or the roof assembly, which has a slope less than 60 degrees from horizontal.

Term	Definition
CENTER OF GLASS U-FACTOR:	is the U-factor for the glass portion only of vertical or horizontal fenestration and is measured at least two and one half inches from the frame. Center of glass U-factor does not consider the U-factor of the frame. Center of glass U-factor is not used
CERTIFICATE OF COMPLIANCE (CF-1R)	is a document with information required by the Commission that is prepared by the Documentation Author that indicates whether the building includes measures that require field verification and diagnostic testing.
CERTIFICATE OF FIELD VERIFICATION AND DIAGNOSTIC TESTING (CF-4R)	is a document with information required by the Commission that is prepared by the HERS Rater to certify that measures requiring field verification and diagnostic testing comply with the requirements.
CERTIFICATION	is certification by the manufacturer to the Commission, as specified the Appliance Efficiency Regulations,, that the appliance complies with the applicable standard for that appliance. The Commission's database of certified heating appliances can be accessed by contacting the Commission Energy Hotline or from the Commission's website at http://www.energy.ca.gov/efficiency/appliances/index.html. The term certification is also used in other ways in the standards. Many of the compliance forms are certificates, whereby installers, HERS testers and others certify that equipment was correctly installed and/or tested.
CERTIFIED	as to a home energy rater, is having been found by a certified home energy rating provider to have successfully completed the requirements established by that home energy rating provider.
CERTIFYING ORGANIZATION	is an independent organization recognized by the Commission to certify manufactured devices for performance values in accordance with procedures adopted by the Commission.
CHANDELIERS	See *Ornamental Chandeliers*.
CHANNEL LETTER SIGN	See *Sign*
CIVIC MEETING SPACE	See *Occupancy Type*.
CLASSROOM, LECTURE, TRAINING, VOCATIONAL ROOM	See *Occupancy Type*.
CLIMATE CONTROL SYSTEM	See *Space Conditioning System*.
CLIMATE ZONES	are the 16 geographic areas of California for which the Commission has established typical weather data, prescriptive packages and energy budgets. Climate zone boundary descriptions are in the document "California Climate Zone Descriptions" (July 1995), incorporated herein by reference. Figure 101-A is an approximate map of the 16 climate zones
CLTD	is the Cooling Load Temperature Difference
CMC	is the 2001 California Mechanical Code.

Term	Definition
COEFFICIENT OF PERFORMANCE (COP), COOLING,	is the ratio of the rate of net heat removal to the rate of total energy input, calculated under designated operating conditions and expressed in consistent units, as determined using the applicable test method in the Appliance Efficiency Regulations or Section 112.
COEFFICIENT OF PERFORMANCE (COP), HEATING,	is the ratio of the rate of net heat output to the rate of total energy input, calculated under designated operating conditions and expressed in consistent units, as determined using the applicable test method in the Appliance Efficiency Regulations or Section 112.
COMBINATION SPACE-HEATING AND WATER-HEATING APPLIANCE	is an appliance that is designed to provide both space heating and water heating from a single primary energy source.
COMBINED HYDRONIC SPACE/WATER HEATING SYSTEM	is a system which both domestic hot water and space heating is supplied from the same water heating equipment. Combined hydronic space heating may include both radiant floor systems and convective or fan coil systems.
COMMISSION	is the California State Energy Resources Conservation and Development Commission, also known as the California Energy Commission.
COMPLETE BUILDING	is an entire building with one occupancy making up 90 percent of the conditioned floor area. See *Entire Building*.
COMPLIANCE APPROACH	is any one of the allowable methods by which the design and construction of a building may be demonstrated to be in compliance with Part 6. The compliance approaches are the performance compliance approach and the prescriptive compliance approach. The requirements for each compliance approach are set forth in Section 100 (d) 2 of Part 6.
COMPLIANCE DOCUMENTATION	are the set of forms and other data prepared in order to demonstrate to the building official that a building complies with the Standards. The compliance forms for the residential and nonresidential standards are contained in the Residential Manual and the Nonresidential Manual.
CONDITIONED FLOOR AREA (CFA)	is the floor area (in square feet) of enclosed conditioned space on all floors of a building, as measured at the floor level of the exterior surfaces of exterior walls enclosing the conditioned space.
CONDITIONED FOOTPRINT	is a projection of all conditioned space on all floors to a vertical plane. The conditioned footprint area may be equal to the first floor area, or it may be greater, if upper floors project over lower floors. One way to think of the conditioned footprint area is as the area of the largest conditioned floor in the building plus the conditioned floor area of any projections from other stories that extend beyond the outline of that largest floor.
CONDITIONED SPACE	is space in a building that is either directly conditioned or indirectly conditioned.

Term	Definition
CONDITIONED VOLUME	is the total volume (in cubic feet) of the conditioned space within a building.
CONSTRUCTION LAYERS	are roof, wall and floor constructions which represent an assembly of layers. Some layers are homogeneous, such as gypsum board and plywood sheathing, while other layers are non-homogeneous such as the combination of wood framing and cavity insulation typical in many buildings.
CONTINUOUS DIMMING	is a lighting control method that is capable of varying the light output of lamps over a continuous range from full light output to minimum light output.
CONTROLLED VENTILATION CRAWL SPACE (CVC)	is a crawl space in a residential building where the side walls of the crawlspace are insulated rather than the floor above the crawlspace. A CVC has automatically controlled crawl space vents. Credit for a CVC is permitted for low-rise residential buildings that use the performance approach to compliance.
CONVENTION CENTERS	See *Occupancy Type*.
COOL ROOF	is a roofing material with high thermal emittance and high solar reflectance, or lower thermal emittance and exceptionally high solar reflectance as specified in Section 118 (i), that reduces heat gain through the roof.
COOL ROOF RATING COUNCIL (CRRC)	is a not-for-profit organization designated by the Commission as the Supervisory Entity with responsibility to rate and label the reflectance and emittance of roof products.
COOLING EQUIPMENT	is equipment used to provide mechanical cooling for a room or rooms in a building.
COOLING LOAD	is the rate at which heat must be extracted from a space to maintain a desired room condition.
COOLING LOAD TEMPERATURE DIFFERENCE (CLTD)	is an equivalent temperature difference used for calculating the instantaneous external cooling loads across a wall or roof. The cooling load is the CLTD x U-factor x Area.
COP	See *Coefficient of Performance*
CORRIDOR	See *Occupancy Type*.
COURTYARD	is an open space through one or more floor levels surrounded by walls within a building.
CRAWL SPACE	is a space immediately under the first floor of a building adjacent to grade.
CRRC	See *Cool Roof Rating Council*.
CRRC-1	is the Cool Roof Rating Council document entitled “Product Rating Program” (2002).
CTI	is the Cooling Tower Institute.
CTI ATC-105	is the Cooling Tower Institute document entitled “Acceptance Test Code for Water Cooling Towers,” 2000 (CTI ATC-105-00).

Term	Definition
CTI STD-201	is the Cooling Tower Institute document entitled "Certification Standard for Commercial Water Cooling Towers," 2002 (CTI STD-201-02).
CUSTOM ENERGY BUDGET	See *Energy Budget*.
C-VALUE	(also known as C-factor) is the time rate of heat flow through unit area of a body induced by a unit temperature difference between the body surfaces, in Btu/(hr. x ft.^{2} x °F). It is not the same as K-value or K-factor.
DAYLIT AREA	is the floor area that is illuminated by daylight through vertical glazing or skylights as specified in Section 131(c).
DECORATIVE GAS APPLIANCE	is a gas appliance that is designed or installed for visual effect only, cannot burn solid wood, and simulates a fire in a fireplace.
DEGREE DAY, HEATING	is a unit, based upon temperature difference and time, used in estimating fuel consumption and specifying nominal annual heating load of a building. For any one day, when the mean temperature is less than 65°F, there exist as many degree days as there are Fahrenheit degrees difference in temperature between the mean temperature for the day and 65°F.
DEMISING PARTITIONS	are barriers that separate conditioned space from enclosed unconditioned space.
DEMISING WALL	is a wall that is a demising partition.
DENSITY	is the mass per unit volume of a construction material as documented in an ASHRAE handbook, a comparably reliable reference or manufacturer's literature.
DEPLETABLE SOURCES	is energy obtained from electricity purchased from a public utility, or energy obtained from burning coal, oil, natural gas, or liquefied petroleum gases.
DESIGN CONDITIONS	are the parameters and conditions used to determine the performance requirements of space-conditioning systems. Design conditions for determining design heating and cooling loads are specified in Section 144 (b) for nonresidential, high-rise residential, and hotel/motel buildings and in Section 150 (h) for low-rise residential buildings.
DESIGN HEAT GAIN RATE	is the total calculated heat gain through the building envelope under design conditions.
DESIGN HEAT LOSS RATE	is the total calculated heat loss through the building envelope under design conditions.
DINING	See *Occupancy Type*.

Term	Definition
DIRECTLY CONDITIONED SPACE	is an enclosed space that is provided with wood heating, is provided with mechanical heating that has a capacity exceeding 10 Btu/(hr.×ft.²), or is provided with mechanical cooling that has a capacity exceeding 5 Btu/(hr.×ft.²), unless the space-conditioning system is designed and thermostatically controlled to maintain a process environment temperature less than 55°F or to maintain a process environment temperature greater than 90°F for the whole space that the system serves, or unless the space-conditioning system is designed and controlled to be incapable of operating at temperatures above 55°F or incapable of operating at temperatures below 90°F at design conditions.
DIVIDERS	are wood, aluminum or vinyl glazing dividers including mullions, muntins, munnions and grilles. Dividers may truly divide lights, be between the panes, or be applied to the exterior or interior of the glazing.
DOCUMENTATION AUTHOR	is the person completing the compliance documentation that demonstrates whether a building complies with the standards. Compliance documentation requirements are defined in the Residential Manual.
DOMINANT OCCUPANCY	is the occupancy type in mixed occupancy buildings with the greatest percentage of total conditioned floor area.
DOOR	See *Exterior Door*.
DORMITORY	is a building consisting of multiple sleeping quarters and having interior common areas such as dining rooms, reading rooms, exercise rooms, toilet rooms, study rooms, hallways, lobbies, corridors, and stairwells, other than high-rise residential, low-rise residential, and hotel/motel occupancies.
DOUBLE-FACED SIGN	See *Sign*
DUAL-GLAZED GREENHOUSE WINDOWS	are a type of dual-glazed fenestration product which adds conditioned volume but not conditioned floor area to a building.
DUCT LOSSES	is heat transfer into or out of a space conditioning system duct through conduction or leakage.
DUCT SEALING	is a procedure for installing a space conditioning distribution system that minimizes leakage of air from or to the distribution system. Minimum specifications for installation procedures, materials, diagnostic testing and field verification are contained in the Residential and Nonresidential ACM Approval Manuals.
DWELLING UNIT	is a dwelling unit within a multifamily building project or a single family building.
EA	is Effective Aperture.
EAST-FACING	means that a surface is oriented such that its normal is within 45 degrees of true east, including 45°0'0" south of east (SE), but excluding 45°0'0" north of east (NE)."

Term	Definition
ECONOMIZER, AIR	is a ducting arrangement and automatic control system that allows a cooling supply fan system to supply outside air to reduce or eliminate the need for mechanical cooling.
ECONOMIZER, WATER	is a system by which the supply air of a cooling system is cooled directly or indirectly by evaporation of water, or other appropriate fluid, in order to reduce or eliminate the need for mechanical cooling.
EDGE OF GLASS:	is the portion of fenestration glazing that is within two and one half inches of the spacer.
EER	See *Energy Efficiency Ratio.*
EFFECTIVE APERTURE (EA)	is the extent that vertical glazing or skylights are effective for providing daylighting. The effective aperture for vertical glazing is specified in Exception 1 to Section 131(c). The effective aperture for skylights is specified in Section 146 (a) 4 F.
EFFICACY, LAMP	is the quotient of rated initial lamp lumens divided by the rated lamp power (watts), without including auxiliaries such as ballasts, measured at 25°C according to IESNA and ANSI Standards.
EFFICACY, LIGHTING SYSTEM	is the quotient of rated initial lamp lumens measured at 25°C according to IESNA and ANSI Standards, times the ballast factor, divided by the input power (watts) to the ballast or other auxiliary device (e.g. transformer); expressed in lumens per watt.
ELECTRIC HEATING	is an electrically powered heating source, such as electric resistance, heat pumps with no auxiliary heat or with electric auxiliary heat, solar with electric back-up, etc.
ELECTRIC RESISTANCE HEATING	is a heating system that converts electric energy directly into heat energy by passing a current through an electric resistance. Electric resistance heat is inherently less efficient than gas as a heating energy source because it must account for losses associated with generation from depletable fossil fuels and transmission to the building site.
ELECTRICAL/ MECHANICAL ROOM	See *Occupancy Type*
ELECTRONICALLY-COMMUTATED MOTOR	is a brushless DC motor with a permanent magnet rotor that is surrounded by stationary motor windings, and an electronic controller that varies rotor speed and direction by sequentially supplying DC current to the windings.
EMITTANCE, THERMAL	is the ratio of the radiant heat flux emitted by a sample to that emitted by a blackbody radiator at the same temperature.
ENCLOSED SPACE	is space that is substantially surrounded by solid surfaces.
ENERGY BUDGET	is the maximum amount of Time Dependent Valuation (TDV) energy that a proposed building, or portion of a building, can be designed to consume, calculated with the approved procedures specified in Title 24, Part 6.

Term	Definition
ENERGY EFFICIENCY RATIO (EER)	is the ratio of net cooling capacity (in Btu/hr.) to total rate of electrical energy (in watts), of a cooling system under designated operating conditions, as determined using the applicable test method in the Appliance Efficiency Regulations or Section 112.
ENERGY EFFICIENCY STANDARDS	See *Building Energy Efficiency Standards*
ENERGY FACTOR (EF)	is the ratio of energy output to energy consumption of a water heater, expressed in equivalent units, under designated operating conditions over a 24-hour use cycle, as determined using the applicable test method in the Appliance Efficiency Regulations.
ENERGY OBTAINED FROM DEPLETABLE SOURCES	is electricity purchased from a public utility, or any energy obtained from coal, oil, natural gas, or liquefied petroleum gases.
ENERGY OBTAINED FROM NONDEPLETABLE SOURCES	is energy that is not energy obtained from depletable sources.
ENFORCEMENT AGENCY	is the city, county, or state agency responsible for issuing a building permit.
ENTIRE BUILDING	is the ensemble of all enclosed space in a building, including the space for which a permit is sought, plus all existing conditioned and unconditioned space within the structure.
ENVELOPE	See *Building Envelope.*
EVAPORATIVE COOLER	provides cooling to a building by either direct contact with water (direct evaporative cooler), no direct contact with water (indirect evaporative cooler), or a combination of direct and indirect cooling (indirect/direct evaporative cooler). The credit offered for evaporative coolers depends on building type and climate.
EXCEPTIONAL METHOD	is a method approved by the Commission that analyzes designs, materials, or devices, which cannot be adequately modeled using alternative calculation methods.
EXECUTIVE DIRECTOR	is the Executive Director of the Commission.
EXERCISE CENTER / GYMNASIUM	See *Occupancy Type*.
EXFILTRATION	is uncontrolled outward air leakage from inside a building, including leakage through cracks and interstices, around windows and doors, and through any other exterior partition or duct penetration.
EXHIBIT	See *Occupancy Type*.
EXPOSED THERMAL MASS	is mass that is directly exposed (uncovered) to the conditioned space of the building. Concrete floors that are covered by carpet are not considered exposed thermal mass.
EXTERIOR DOOR	is a door through an exterior partition that is opaque or has a glazed area that is less than or equal to one-half of the door area. Doors with a glazed area of more than one half of the door area are treated as a fenestration product.

Term	Definition
EXTERIOR FLOOR/SOFFIT	is a horizontal exterior partition, or a horizontal demising partition, under conditioned space. For low-rise residential occupancies, exterior floors also include those on grade.
EXTERIOR PARTITION	is an opaque, translucent, or transparent solid barrier that separates conditioned space from ambient air or space that is not enclosed. For low-rise residential occupancies, exterior partitions also include barriers that separate conditioned space from unconditioned space, or the ground.
EXTERIOR ROOF/CEILING	is an exterior partition, or a demising partition, that has a slope less than 60 degrees from horizontal, that has conditioned space below, and that is not an exterior door or skylight.
EXTERIOR ROOF/CEILING AREA	is the area of the exterior surface of exterior roof/ceilings.
EXTERIOR WALL	is any wall or element of a wall, or any member or group of members, which defines the exterior boundaries or courts of a building and which has a slope of 60 degrees or greater with the horizontal plane. An exterior wall or partition is not an exterior floor/soffit, exterior door, exterior roof/ceiling, window, skylight, or demising wall.
EXTERIOR WALL AREA	is the area of the opaque exterior surface of exterior walls.
EXTERNALLY ILLUMINATED SIGN	See *Sign*
FACTORY ASSEMBLED COOLING TOWERS	are cooling towers constructed from factory assembled modules either shipped to the site in one piece or put together in the field.
FENESTRATION AREA	is the area of fenestration products (i.e., windows, skylights and glass doors) in exterior openings, including the sash or frame area. The nominal area (from nominal dimensions such as $4^0 4^0$) or rough opening is also acceptable. Where the term "glazing area" is used in the standards it is the entire fenestration area, not just the area of glazing, unless stated otherwise. See *Fenestration Product*, *Glazing Area* and *Shading*.
FENESTRATION PRODUCT	is any transparent or translucent material plus any sash, frame, mullions and dividers, in the envelope of a building, including, but not limited to, windows, sliding glass doors, French doors, skylights, curtain walls, garden windows, and other doors with a glazed area of more than one half of the door area.
FENESTRATION SYSTEM	is a collection of fenestration products included in the design of a building. See *Fenestration Product*.
FIELD ERECTED COOLING TOWERS	are cooling towers which are custom designed for a specific application and which can not be delivered to a project site in the form of factory assembled modules due to their size, configuration, or materials of construction.

Term	Definition
FIELD-FABRICATED FENESTRATION PRODUCT OR EXTERIOR DOOR	is a fenestration product or exterior door whose frame is made at the construction site of standard dimensional lumber or other materials that were not previously cut, or otherwise formed with the specific intention of being used to fabricate a fenestration product or exterior door. Field fabricated does not include site-built fenestration with a label certificate or products required to have temporary or permanent labels.
FINANCIAL TRANSACTION	See *Occupancy Type*
FIREPLACE	is a hearth and fire chamber or similar prepared place in which a solid-fuel fire may be burned, as defined in the CBC; these include, but are not limited to, factory-built fireplaces, masonry fireplaces, and masonry heaters.
FLOOR AREA	is the floor area (in square feet) of enclosed conditioned or unconditioned space on all floors of a building, as measured at the floor level of the exterior surfaces of exterior walls enclosing the conditioned or unconditioned space. See *Conditioned Floor Area*.
FLOOR/SOFFIT TYPE	is a type of floor/soffit assembly having a specific heat capacity, framing type, and U-value.
FLUX	is the rate of the energy flow per unit area.
FOOD PREPARATION EQUIPMENT	is cooking equipment intended for commercial use, including coffee machines, espresso coffee makers, conductive cookers, food warmers including heated food servers, fryers, griddles, nut warmers, ovens, popcorn makers, steam kettles, ranges, and cooking appliances for use in commercial kitchens, restaurants, or other business establishments where food is dispensed.
FOSSIL FUELS	are fuels which are derived from natural gas, coal, oil and liquefied petroleum products. These are generally nonrenewable resources, although natural gas may also be produced by other means, such as biomass conversion.
FRAMED PARTITION OR ASSEMBLY	is a partition or assembly constructed using separate structural members spaced not more than 32 inches on center.
FRAMING EFFECTS	is the effect on the overall U-factor due to the type and amount of framing in walls, roofs/ceilings and floors . For compliance, fixed values for wood framing percentages are assumed when calculating U-factors.
FRAMING PERCENTAGE	is the fraction of the surface of a partition that is framing as compared to that portion which is cavity.
FRONT	is the primary entry side of the building (front facade) used as a reference in defining the orientation of the building or unit plan. The orientation of the front facade may not always be the same as that for the front door itself.

Term	Definition
GAP WIDTH	is the distance between glazings in multi-glazed systems. This is typically measured from inside surface to inside surface, though some manufacturers may report “overall” IG width, which is measured from outside surface to outside surface.
GAS COOLING EQUIPMENT	is cooling equipment that produces chilled water or cold air using natural gas or liquefied petroleum gas as the primary energy source.
GAS HEATING SYSTEM	is a natural gas or liquified petroleum gas heating system.
GAS INFILLS	are air, argon, krypton, CO_2, SF_6, or a mixture of these gasses between the panes of glass in insulated glass units.
GAS LOG	is a self-contained, free-standing, open-flame, gas-burning appliance consisting of a metal frame or base supporting simulated logs, and designed for installation only in a vented fireplace. See also *Decorative Gas Appliance*
GENERAL COMMERCIAL AND INDUSTRIAL WORK	See *Occupancy Type*.
GENERAL LIGHTING	is lighting designed to provide a substantially uniform level of illumination throughout an area, exclusive of any provision for special visual tasks or decorative effect. When designed for lower-than-task illuminance used in conjunction with other specific task lighting systems, it is also called "ambient" lighting. See also *Lighting*.
GEOTHERMAL HEAT PUMP	See *Ground Source Heat Pump*.
GLAZING	See *Fenestration Product*.
GLAZING AREA	See *Fenestration Area*.
GOVERNMENTAL AGENCY	is any public agency or subdivision thereof, including, but not limited to, any agency of the state, a county, a city, a district, an association of governments, or a joint power agency.
GREENHOUSE WINDOW	is a type of fenestration product which adds conditioned volume but no conditioned floor area to a building.
GRILLES	See *Dividers.*
GROCERY SALES	See *Occupancy Type*.
GROSS EXTERIOR ROOF AREA	is the sum of the skylight area and the exterior roof/ceiling area.
GROSS EXTERIOR WALL AREA	is the sum of the window area, door area, and exterior wall area.
GROUND FLOOR AREA	is defined as the slab-on-grade area of a slab-on-grade building and the conditioned footprint area of a raised floor building (for compliance with the low-rise residential standards).

Term	Definition
GROUND SOURCE HEAT PUMP	is a heat pump that uses the earth as a source of energy for heating and a sink for energy when cooling. Some systems pump water from an aquifer in the ground and return the water to the ground after transferring heat from or to the water. A few systems use refrigerant directly in a loop of piping buried in the ground. Those heat pumps that use either a water loop or pump water from an aquifer have efficiency test methods that are accepted by the Energy Commission. These efficiency values are certified to the Energy Commission by the manufacturer and are expressed in terms of heating Coefficient of Performance (COP) and cooling Energy Efficiency Ratio (EER).
HABITABLE STORY	is a story that contains space in which humans may work or live in reasonable comfort, and that has at least 50 percent of its volume above grade.
HARD COAT	is a low emissivity metallic coating applied to the glass, which will be installed in a fenestration product, through a pyrolytic process (at or near the melting point of the glass so that it bonds with the surface layer of glass). Hard coatings are less susceptible to oxidation and scratching as compared to soft coats. Hard coatings generally do not have as low emissivity as soft coats.
HARDSCAPE	See *Outdoor Lighting*
HEAT CAPACITY (HC)	is the amount of heat necessary to raise the temperature of all the components of a unit area in an assembly by 1°F. It is calculated as the sum of the average thickness times the density times the specific heat for each component, and is expressed in Btu per square foot per °F.
HEAT PUMP	is a device that is capable of heating by refrigeration, and that may include a capability for cooling.
HEATED SLAB FLOOR	is a concrete slab floor or a lightweight concrete topping slab laid over a raised floor, with embedded space heating hot water pipes. The heating system using the heated slab is sometimes referred to as radiant slab floors or radiant heating.
HEATING EQUIPMENT	is equipment used to provide mechanical heating for a room or rooms in a building.
HEATING SEASONAL PERFORMANCE FACTOR (HSPF)	is the total heating output of a central air-conditioning heat pump during its normal usage period for heating, divided by the total electrical energy input in watt-hours during the same period, as determined using the applicable test method the Appliance Efficiency Regulations.

Term	Definition
HEATING, VENTILATING AND AIR CONDITIONING (HVAC) SYSTEM	is the mechanical heating, ventilating and air conditioning system of the building, also known as the HVAC system. The standards use various measures of equipment efficiency defined according to the type of equipment installed. Gas (fossil fuel) heating equipment is rated by the Annual Fuel Utilization Efficiency (AFUE). The heating efficiency of electric heat pumps with less than 65,000 Btu/h cooling capacity is rated by the Heating Seasonal Performance Factor (HSPF). The heating efficiency of heat pumps with cooling capacity of 65,000 Btu/h or more is rated by the Coefficient of Performance (COP). Electric resistance heating is rated by HSPF or COP. All electric cooling equipment (including heat pump cooling equipment) with less than 65,000 Btu/h output capacity is rated by the Seasonal Energy Efficiency Ratio (SEER) (equipment of this size may also be rated by the EER). Electric cooling equipment (including heat pump cooling equipment) with an output capacity of 65,000 Btu/h or more is rated by the Energy Efficiency Ratio (EER).
HERS PROVIDER	see *Home Energy Rating System Provider*.
HERS RATER	See Home *Energy Rating System Rater*.
HI	is the Hydronics Institute of the Gas Appliance Manufacturers Association (GAMA).
HI HTG BOILER STANDARD	is the Hydronics Institute document entitled “Testing and Rating Standard for Rating Boilers,” 1989.
HIGH BAY	See *Occupancy Type, General commercial and industrial work*
HIGH-RISE RESIDENTIAL BUILDING	is a building, other than a hotel/motel, of Occupancy Group R, Division 1 with four or more habitable stories.
HOME ENERGY RATING SYSTEM PROVIDER	is an organization that the Commission has approved to administer a home energy rating system program, certify raters and maintain quality control over field verification and diagnostic testing required for compliance with the Energy Efficiency Standards.
HOME ENERGY RATING SYSTEM RATER	is a person certified by a Commission approved HERS Provider to perform the field verification and diagnostic testing required for demonstrating compliance with the Energy Efficiency Standards.
HORIZONTAL GLAZING	See *Skylight*.
HOTEL AND MOTEL GUEST ROOM	is a guest room of a Hotel/Motel.
HOTEL FUNCTION AREA	See *Occupancy Type*.
HOTEL LOBBY	See *Occupancy Type*, Lobby, Hotel.

Term	Definition
HOTEL/MOTEL	is a building or buildings incorporating six or more guest rooms or a lobby serving six or more guest rooms, where the guest rooms are intended or designed to be used, or which are used, rented, or hired out to be occupied, or which are occupied for sleeping purposes by guests, and all conditioned spaces within the same building envelope. Hotel/motel also includes all conditioned spaces which are (1) on the same property as the hotel/motel, (2) served by the same central heating, ventilation, and air-conditioning system as the hotel/motel, and (3) integrally related to the functioning of the hotel/motel as such, including, but not limited to, exhibition facilities, meeting and conference facilities, food service facilities, lobbies, and laundries.
HSPF	See *Heating Seasonal Performance Factor*.
HVAC	See *Heating, Ventilating and Air Conditioning*.
HVAC SYSTEM	See *HVAC,* See *Space Conditioning System*.
HYDRONIC COOLING SYSTEM	is any cooling system which uses water or a water solution as a source of cooling or heat rejection, including chilled water systems (both air and water-cooled) as well as water-cooled or evaporatively cooled direct expansion systems, such as water source (water-to-air) heat pumps.
HYDRONIC SPACE HEATING SYSTEM	is a system that uses water-heating equipment, such as a storage tank water heater or a boiler, to provide space heating. Hydronic space heating systems include both radiant floor systems and convective or fan coil systems. See *Combined Hydronic Space/Water Heating* System
IESNA HB	(See “IESNA Lighting Handbook)
IESNA LIGHTING HANDBOOK	is the Illuminating Engineering Society National Association document entitled “The IESNA Lighting Handbook: Reference and Applications, Ninth Edition.” (2000)
IG UNIT	See *Insulating Glass Unit*
ILLUMINATED FACE	See *Sign*
INDEPENDENT IDENTITY	is having no financial interest in, and not advocating or recommending the use of any product or service as a means of gaining increased business with, firms or persons specified in Section 1673(i) of the California Home Energy Rating System Program regulations (California Code of Regulations, Title 20, Division 2, Chapter 4, Article 8). (Financial Interest is an ownership interest, debt agreement, or employer/employee relationship. Financial interest does not include ownership of less than 5% of the outstanding equity securities of a publicly traded corporation.) NOTE: The definitions of "independent entity" and "financial interest," together with Title 20, Section 1673(i), prohibit conflicts of interest between HERS Providers and HERS Raters, or between Providers/Raters and builders/subcontractors.

Term	Definition
INDIRECTLY CONDITIONED SPACE	is enclosed space, including, but not limited to, unconditioned volume in atria, that (1) is not directly conditioned space; and (2) either (a) has a thermal transmittance area product (UA) to directly conditioned space exceeding that to the outdoors or to unconditioned space and does not have fixed vents or openings to the outdoors or to unconditioned space, or (b) is a space through which air from directly conditioned spaces is transferred at a rate exceeding three air changes per hour.
INDUSTRIAL AND COMMERCIAL STORAGE BUILDING	*See Occupancy Type*
INDUSTRIAL EQUIPMENT	is manufactured equipment used in industrial processes.
INFILTRATION	is uncontrolled inward air leakage from outside a building or unconditioned space, including leakage through cracks and interstices, around windows and doors, and through any other exterior or demising partition or pipe or duct penetration.
INFILTRATION CONTROLS	are measures taken to control the infiltration of air. Mandatory Infiltration control measures include weatherstripping, caulking, and sealing in and around all exterior joints and openings.
INSTALLATION CERTIFICATE (CF-6R)	is a document with information required by the Commission that is prepared by the builder or installer verifying that the measure was installed to meet the requirements of the standards.
INSULATING GLASS UNIT	is a self-contained unit, including the glazings, spacer(s), films (if any), gas infills, and edge caulking, that is installed in fenestration products. It does not include the frame.
INSULATION	Insulation is a material that limits heat transfer. Insulating material of the types and forms listed in Section 118(a) of the Standards, may be installed only if the manufacturer has certified that the insulation complies with the Standards for Insulating Material, Title 24, Part 12, Chapter 12-13 of the California Code of Regulations. Insulation must be placed within or contiguous with a wall, ceiling or floor, or over the surface of any appliance or its intake or outtake mechanism for the purpose of reducing heat transfer or reducing adverse temperature fluctuations of the building, room or appliance. Insulation may be installed in wall, ceiling/roof and raised floor assemblies and at the edge of a slab-on-grade. Movable insulation is designed to cover windows and other glazed openings part of the time to reduce heat loss and heat gain.
INTEGRATED PART LOAD VALUE (IPLV)	is a single number figure of merit based on part load EER or COP expressing part load efficiency for air-conditioning and heat pump equipment on the basis of weighted operation at various load capacities for the equipment as determined using the applicable test method in the Appliance Efficiency Regulations or Section 112.

Term	Definition
INTERIOR PARTITION	is an interior wall or floor/ceiling that separates one area of conditioned space from another within the building envelope.
INTERNALLY ILLUMINATED SIGN	See *Sign*
IPLV	See *Integrated Part Load Value*.
ISO 13256-1	is the International Organization for Standardization document entitled "Water-source heat pumps – Testing and rating for performance – Part 1: Water-to-air and brine-to-air heat pumps," 1998.
ISOLATION DEVICE	is a device that prevents the conditioning of a zone or group of zones in a building while other zones of the building are being conditioned.
KITCHEN	in a low-rise residential building is a room or area used for cooking, food storage and preparation and washing dishes, including associated counter tops and cabinets, refrigerator, stove, ovens, and floor area. Adjacent areas are considered kitchen if the lighting for the adjacent areas is on the same circuit as the lighting for the kitchen.
KITCHEN/FOOD PREPARATION	See *Occupancy Type*.
KNEE WALL	is a sidewall separating conditioned space from attic space under a pitched roof. Knee walls should be insulated as an exterior wall as specified by the chosen method of compliance.
LANDSCAPE LIGHTING	See *Outdoor Lighting*
LANTERN	See *Outdoor Lighting*
LAUNDRY	See *Occupancy Type*
LEFT SIDE	is the left side of the building as one faces the front facade from the outside. This designation is used on the Certificate of Compliance and other compliance documentation
LIBRARY	See *Occupancy Type*
LIGHTING ZONE	See *Outdoor Lighting*
LIQUID LINE	is the refrigerant line that leads from the condenser to the evaporator in a split system air conditioner or heat pump. The refrigerant in this line is in a liquid state and is at an elevated temperature. This line should not be insulated.
LOCKER/DRESSING ROOM	See *Occupancy Type*.
LOUNGE/RECREATION	See *Occupancy Type*.
LOW BAY	See *Occupancy Type, General commercial and industrial work*
LOW-E COATING	is a low emissivity metallic coating applied to glazing in fenestration products. See *Soft Coat* and *Hard Coat*.
LOW-RISE ENCLOSED SPACE	is an enclosed space located in a building with 3 or fewer stories.

Term	Definition
LOW-RISE RESIDENTIAL BUILDING	is a building, other than a hotel/motel that is of Occupancy Group R, Division 1, and is three stories or less, or that is of Occupancy Group R, Division 3.
LOW-SLOPED ROOF	is a roof that has a ratio of rise to run of 2:12 or less.
LPG	is Liquefied Petroleum Gas. Propane is one type of LPG.
LUMENS/WATT	is the amount of light available from a given light source (lumens) divided by the power requirement for that light source (watts). The more usable light that a light source provides per watt, the greater its efficacy. See *Efficacy*.
LUMINAIRE	is a complete lighting unit consisting of a lamp and the parts designed to distribute the light, to position and protect the lamp, and to connect the lamp to the power supply; commonly referred to as "lighting fixtures" or "instruments."
MAIN ENTRY LOBBY	See *Occupancy Type*, Lobby, Main entry.
MALL	See *Occupancy Type*.
MALL BUILDING	is a single building enclosing a number of tenants and occupants wherein two or more tenants have a main entrance into one or more malls.
MANDATORY MEASURES CHECKLIST (MF-1R)	is a form used by the building plan checker and field inspector to verify compliance of the building with the prescribed list of mandatory features, equipment efficiencies and product certification requirements. The documentation author indicates compliance by initialing, checking, or marking N/A (for features not applicable) in the boxes or spaces provided for the designer.
MANUAL	is capable of being operated by personal intervention.
MANUFACTURED DEVICE	is any heating, cooling, ventilation, lighting, water heating, refrigeration, cooking, plumbing fitting, insulation, door, fenestration product, or any other appliance, device, equipment, or system subject to Sections 110 through 119 of Title 24, Part 6.
MANUFACTURED FENESTRATION PRODUCT	is a fenestration product constructed of materials which are factory cut or otherwise factory formed with the specific intention of being used to fabricate a fenestration product. A manufactured fenestration product is typically assembled before delivery to a job site. However a “knocked-down” or partially assembled product sold as a fenestration product is also a manufactured fenestration product when provided with temporary and permanent labels as described in Section 10-111; otherwise it is a site-built fenestration product.
MARQUEE LIGHTING	See *Outdoor Lighting*

Term	Definition
MECHANICAL COOLING	is lowering the temperature within a space using refrigerant compressors or absorbers, desiccant dehumidifiers, or other systems that require energy from depletable sources to directly condition the space. In nonresidential, high-rise residential, and hotel/motel buildings cooling of a space by direct or indirect evaporation of water alone is not considered mechanical cooling.
MECHANICAL HEATING	is raising the temperature within a space using electric resistance heaters, fossil fuel burners, heat pumps, or other systems that require energy from depletable sources to directly condition the space.
MEDICAL AND CLINICAL CARE:	See *Occupancy Type*.
METAL BUILDING	is a complete integrated set of mutually dependent components and assemblies that form a building, which consists of a steel-framed superstructure and metal skin. This does not include structural glass or metal panels such as in a curtainwall system.
MIXED OCCUPANCY BUILDING	is a building designed and constructed for more than one type of occupancy, such as a three story building with ground floor retail and second and third floor residential apartments.
MODEL	is a floor plan and house or dwelling unit design that is repeated throughout a subdivision or within a multi-family building project. To be considered the same model, dwelling units shall be in the same subdivision or multi-family housing development and have the same energy designs and features, including the same floor area and volume, for each dwelling unit, as shown on the CF-1R. For multi-family buildings, variations in the exterior surface areas caused by location of dwelling units within the building do not cause dwelling units to be considered a different model.
MODELING ASSUMPTIONS	are the conditions (such as weather conditions, thermostat settings and schedules, internal gain schedules, etc.) that are used for calculating a building's annual energy consumption as specified in the ACM Manuals.
MOTION SENSOR, LIGHTING	is a device that automatically turns lights off soon after an area is vacated. The term Motion Sensor applies to a device that controls outdoor lighting systems. When the device is used to control indoor lighting systems, it is termed an occupant sensor. The device also may be called an occupancy sensor, or occupant sensing device.
MOVABLE SHADING DEVICE	See *Operable Shading Device*.
MULLION	is a vertical framing member separating adjoining window or door sections. See Dividers
MULTI-FAMILY DWELLING UNIT	is a dwelling unit of occupancy type R, as defined by the *CBC*, sharing a common wall and/or ceiling/floor with at least one other dwelling unit.

Term	Definition
MULTI-LEVEL LIGHTING CONTROL	is a lighting control that reduces lighting power in multiple steps while maintaining a reasonably uniform level of illuminance throughout the area controlled.
MULTIPLE ZONE	is a supply fan (and optionally a return fan) with heating and/or cooling heat exchangers (e.g. DX coil, chilled water coil, hot water coil, furnace, electric heater) that serves more than one thermostatic zone. Zones are thermostatically controlled by features including but not limited to variable volume, reheat, recool and concurrent operation of another system.
MULTISCENE DIMMING SYSTEM	is a lighting control device that has the capability of setting light levels throughout a continuous range, and that has pre-established settings within the range.
MUNTINS	See *Dividers*.
MUSEUM	See *Occupancy Type*
NEWLY CONDITIONED SPACE	is any space being converted from unconditioned to directly conditioned, or indirectly conditioned space. Newly conditioned space must comply with the requirements for an addition. See Section 149 for nonresidential occupancies and Section 152 for residential occupancies.
NEWLY CONSTRUCTED BUILDING	is a building that has never been used or occupied for any purpose.
NFRC	is the National Fenestration Rating Council. This is a national organization of fenestration product manufacturers, glazing manufacturers, manufacturers of related materials, utilities, state energy offices, laboratories, home builders, specifiers (architects), and public interest groups. This organization is designated by the Commission as the Supervisory Entity, which is responsible for rating the U-factors and solar heat gain coefficients of manufactured fenestration products (i.e., windows, skylights, glazed doors) that must be used in compliance calculations. See also *Fenestration Area* and *Fenestration Product*.
NFRC 100	is the National Fenestration Rating Council document entitled "NFRC 100: Procedure for Determining Fenestration Product U-factors" (November 2002).
NFRC 200	is the National Fenestration Rating Council document entitled "NFRC 200: Procedure for Determining Fenestration Product Solar Heat Gain Coefficients at Normal Incidence" (November 2002).
NFRC 400	is the National Fenestration Rating Council document entitled "NFRC 400: Procedure for Determining Fenestration Product Air Leakage" (January 2002).
NONDEPLETABLE SOURCES	is defined as energy that is not obtained from depletable sources. Also referred to as renewable energy, including solar and wind power. See *Energy Obtained from Nondepletable Sources*

Term	Definition
NONRESIDENTIAL BUILDING	is any building which is a Group A, B, E, F, H, M, or S Occupancy NOTE: Requirements for high-rise residential buildings and hotels/motels are included in the nonresidential sections of Title 24, Part 6.
NONRESIDENTIAL MANUAL	is the manual developed by the Commission, under Section 25402.1(e) of the Public Resources Code, to aid designers, builders and contractors in meeting the energy efficiency requirements for nonresidential, high-rise residential, and hotel/motel buildings.
NORTH-FACING	is oriented to within 45 degrees of true north, including 45o00'00" east of north (NE), but excluding 45°00'00' west of north (NW). This definition applies only to the prescriptive packages and master plans analyzed according to the multiple orientation alternative. In the computer methods the actual building orientation must be used, except in the case of master plans as stated above.
OCCUPANCY TYPE	is one of the following: **Auditorium** is the part of a public building where an audience sits in fixed seating, or a room, area, or building with fixed seats used for public meetings or gatherings not specifically for the viewing of dramatic performances. **Auto repair** is the portion of a building used to repair automotive equipment and/or vehicles, exchange parts, and may include work using an open flame or welding equipment. **Civic** meeting space is a city council or board of supervisors meeting chamber, courtroom, or other official meeting space accessible to the public . **Classroom, lecture, or training** is a room or area where an audience or class receives instruction. **Commercial and industrial storage** is a room, area, or building used for storing items. **Convention, conference, multipurpose and meeting centers** are assembly rooms, areas, or buildings used for meetings, conventions and multiple purposes, including but not limited to, dramatic performances, and that has neither fixed seating nor fixed staging. **Corridor** is a passageway or route into which compartments or rooms open. **Dining** is a room or rooms in a restaurant or hotel/motel (other than guest rooms) where meals that are served to the customers will be consumed.

Term	Definition
OCCUPANCY TYPE *CONT.*	is one of the following:

Dormitory is a building consisting of multiple sleeping quarters and having interior common areas such as dining rooms, reading rooms, exercise rooms, toilet rooms, study rooms, hallways, lobbies, corridors, and stairwells, other than high-rise residential, low-rise residential, and hotel/motel occupancies.

Electrical/mechanical room is a room in which the building's electrical switchbox or control panels, and/or HVAC controls or equipment is located.

Exercise center/gymnasium is a room or building equipped for gymnastics, exercise equipment, or indoor athletic activities.

Exhibit is a room or area that is used for exhibitions that has neither fixed seating nor fixed staging.

Financial transaction is a public establishment used for conducting financial transactions including the custody, loan, exchange, or issue of money, for the extension of credit, and for facilitating the transmission of funds

General commercial and industrial work is a room, area, or building in which an art, craft, assembly or manufacturing operation is performed.

High bay: Luminaires 25 feet or more above the floor.

Low bay: Luminaires less than 25 feet above the floor.

Grocery sales is a room, area, or building that has as its primary purpose the sale of foodstuffs requiring additional preparation prior to consumption.

Kitchen/food preparation is a room or area with cooking facilities and/or an area where food is prepared.

Laundry is a place where laundering activities occur.

Library is a repository for literary materials, such as books, periodicals, newspapers, pamphlets and prints, kept for reading or reference.

Lobby, Hotel is the contiguous space in a hotel/motel between the main entrance and the front desk, including reception, waiting and seating areas.

Lobby, Main entry is the contiguous space in buildings other than hotel/motel that is directly located by the main entrance of the building through which persons must pass, including reception, waiting and seating areas.

Locker/dressing room is a room or area for changing clothing, sometimes equipped with lockers.

Term	Definition
OCCUPANCY TYPE *CONT.*	is one of the following:

Lounge/recreation is a room used for leisure activities which may be associated with a restaurant or bar.

Mall is a roofed or covered common pedestrian area within a mall building that serves as access for two or more tenants.

Medical and clinical care is a room, area, or building that does not provide overnight patient care and that is used to promote the condition of being sound in body or mind through medical, dental, or psychological examination and treatment, including, but not limited to, laboratories and treatment facilities.

Museum is a space in which works of artistic, historical, or scientific value are cared for and exhibited.

Office is a room, area, or building of CBC Group B Occupancy other than restaurants.

Parking garage is a covered building or structure for the purpose of parking vehicles, which consists of at least a roof over the parking area, often with walls on one or more sides. Parking garages may have fences or rails in place of one or more walls. The structure has an entrance(s) and exit(s), and includes areas for vehicle maneuvering to reach the parking spaces. If the roof of a parking structure is also used for parking, the section without an overhead roof is considered a parking lot instead of a parking garage.

Precision commercial or industrial work is a room, area, or building in which an art, craft, assembly or a manufacturing operation is performed involving visual tasks of small size or fine detail such as electronic assembly, fine woodworking, metal lathe operation, fine hand painting and finishing, egg processing operations, or tasks of similar visual difficulty.

Religious worship is a room, area, or building for worship.

Restaurant is a room, area, or building that is a food establishment as defined in Section 27520 of the Health and Safety Code.

Restroom is a room or suite of rooms providing personal facilities such as toilets and washbasins.

Retail merchandise sales is a room, area, or building in which the primary activity is the sale of merchandise.

School is a building or group of buildings that is predominately classrooms and that is used by an organization that provides instruction to students.

Term	Definition
OCCUPANCY TYPE *CONT.*	is one of the following: **Senior housing** is housing other than Occupancy Group I that is specifically for habitation by seniors, including but not limited to independent living quarters, and assisted living quarters. Commons areas may include dining, reading, study, library or other community spaces and/or medical treatment or hospice facilities. **Stairs, active/inactive**, is a series of steps providing passage from one level of a building to another. **Support area** is a room or area used as a passageway, utility room, storage space, or other type of space associated with or secondary to the function of an occupancy that is listed in these regulations. **Tenant lease space** is a portion of a building intended for lease for which a specific tenant is not identified at the time of permit application. **Theater, motion picture**, is an assembly room, a hall, or a building with tiers of rising seats or steps for the showing of motion pictures. **Theater, performance**, is an assembly room, a hall, or a building with tiers of rising seats or steps for the viewing of dramatic performances, lectures, musical events and similar live performances. **Transportation function** is the ticketing area, waiting area, baggage handling areas, concourse, or other areas not covered by primary functions in Table 146-C in an airport terminal, bus or rail terminal or station, subway or transit station, or marine terminal. **Vocational room** is a room used to provide training in a special skill to be pursued as a trade. **Waiting area** is an area other than a hotel lobby or main entry lobby normally provided with seating and used for people waiting. **Wholesale showroom** is a room where samples of merchandise are displayed.
OCCUPANT SENSOR, LIGHTING	is a device that automatically turns lights off soon after an area is vacated. The term Occupant Sensor applies to a device that controls interior lighting systems, but can be used interchangeably with occupancy sensor, occupant sensing device, and motion sensor.
OFFICE	See *Occupancy Type*.
OPERABLE SHADING DEVICE	is a device at the interior or exterior of a building or integral with a fenestration product, which is capable of being operated, either manually or automatically, to adjust the amount of solar radiation admitted to the interior of the building.

Term	Definition
ORNAMENTAL CHANDELIERS	are ceiling-mounted, close-to-ceiling, or suspended decorative luminaires that use glass, crystal, ornamental metals, or other decorative material and that typically are used in hotel/motels, restaurants, or churches as a significant element in the interior architecture.
ORNAMENTAL LIGHTING	See *Outdoor Lighting*
OUTDOOR AIR	is air taken from outdoors and not previously circulated in the building.
OUTDOOR LIGHTING	definitions include the following: **Building entrance** is any operable doorway in or out of a building, including overhead doors. **Building façade** is the exterior surfaces of a building, not including horizontal roofing, signs, and surfaces not visible from any reasonable viewing location. **Canopy** is a permanent structure consisting of a roof and supporting building elements, with the area beneath at least partially open to the elements. A canopy may be freestanding or attached to surrounding structures. A canopy roof may serve as the floor of a structure above. **Hardscape** is an improvement to a site that is paved and has other structural features, including but not limited to, curbs, plazas, entries, parking lots, site roadways, driveways, walkways, sidewalks, bikeways, water features and pools, storage or service yards, loading docks, amphitheaters, outdoor sales lots, and private monuments and statuary. **Landscape lighting** is lighting that is recessed into the ground or paving; mounted on the ground; mounted less than 42” above grade; or mounted onto trees or trellises, and that is intended to be aimed only at landscape features. **Lantern** is an ornamental outdoor luminaire that uses an electric lamp to replicate a pre-electric lantern, which used a flame to generate light. **Lighting zone** is a geographic area designated by the California Energy Commission that determines requirements for outdoor lighting, including lighting power densities and specific control, equipment or performance requirements. Lighting zones are numbered LZ1, LZ2, LZ3, and LZ4. **Marquee lighting** is a permanent lighting system consisting of one or more rows of many small lights attached to a canopy.

Term	Definition
OUTDOOR LIGHTING *CONT.*	definitions include the following: **Ornamental lighting** is post-top luminaires, lanterns, pendant luminaires, chandeliers, and marquee lighting. **Outdoor lighting** is all electrical lighting for parking lots, signs, building entrances, outdoor sales areas, outdoor canopies, landscape lighting, lighting for building facades and hardscape lighting. **Outdoor sales frontage** is the portion of the perimeter of an outdoor sales area immediately adjacent to a street, road, or public sidewalk. **Outdoor sales lot** is an uncovered paved area used exclusively for the display of vehicles, equipment or other merchandise for sale. All internal and adjacent access drives, walkway areas, employee and customer parking areas, vehicle service or storage areas are not outdoor sales lot areas, but are considered hardscape. **Parking lot** is an uncovered area for the purpose of parking vehicles. Parking lot is a type of hardscape. **Paved area** is an area that is paved with concrete, asphalt, stone, brick, gravel, or other improved wearing surface, including the curb. **Pendant** is a mounting method in which the luminaire is suspended from above. **Post Top Luminaire** is an ornamental outdoor luminaire that is mounted directly on top of a lamp-post. **Principal viewing location** is anywhere along the adjacent highway, street, road or sidewalk running parallel to an outdoor sales frontage **Public monuments** are statuary, buildings, structures, and/or hardscape on public land. **Sales canopy** is a canopy specifically to cover and protect an outdoor sales area. **Vehicle service station** is a gasoline or diesel dispensing station.
OUTDOOR SALES FRONTAGE	See *Outdoor Lighting*
OUTDOOR SALES LOT	See *Outdoor Lighting*
OUTSIDE AIR	See *Outdoor Air*
OVERALL HEAT GAIN	is the total heat gain through all portions of the building envelope calculated as specified in Section 143 (b) 2 for determining compliance with the Overall Envelope Approach.
OVERALL HEAT LOSS	is the total heat loss through all portions of the building envelope calculated as specified in Section 143 (b) 1 for determining compliance with the Overall Envelope Approach.

Term	Definition
PACKAGED AIR CONDITIONER OR HEAT PUMP	is an air conditioner or heat pump that combines both the condenser and air handling capabilities in a single enclosure or package.
PANEL SIGN	See *Sign, Cabinet*
PARKING GARAGE	See *Occupancy Type*
PARKING LOT	See *Outdoor Lighting*
PART 6	is Title 24, Part 6 of the California Code of Regulations. See *Building Energy Efficiency Standards*
PAVED AREA	See *Outdoor Lighting*
PENDANT	See *Outdoor Lighting*
PERM	is equal to 1 grain of water vapor transmitted per 1 square foot per hour per inch of mercury pressure difference.
PERMANENTLY ATTACHED	is attached with fasteners that require additional tools to remove (as opposed to clips, hooks, latches, snaps, or ties).
PHOTOCONTROL	is an electric control that detects changes in illumination then controls its electric load at predetermined illumination levels.
PLENUM	is an air compartment or chamber, including uninhabited crawl space, areas above a ceiling or below a floor, including air spaces below raised floors of computer/data processing centers, or attic spaces, to which one or more ducts are connected and which forms part of either the supply-air, return-air or exhaust air system, other than the occupied space being conditioned.
POOR QUALITY LIGHTING TASKS	are visual tasks that require Illuminance Category E or greater, because of the choice of a writing or printing method that produces characters that are of small size or lower contrast than good quality alternatives that are regularly used in offices.
POST TOP LUMINAIRE	See *Outdoor Lighting*
PRECISION COMMERCIAL OR INDUSTRIAL WORK	See *Occupancy Type*.
PRINCIPAL VIEWING LOCATION	See *Outdoor Lighting*
PRIVATE OFFICE OR WORK AREA	is an office bounded by 72-inch or higher permanent partitions and is no more than 200 square feet. See *Occupancy Type*.
PROCESS	is an activity or treatment that is not related to the space conditioning, lighting, service water heating, or ventilating of a building as it relates to human occupancy.
PROCESS LOAD	is a load resulting from a process.
PROPOSED DESIGN	is the proposed building design which must comply with the standards before receiving a building permit. See also Energy Budget and Standard Design.
PUBLIC ADVISER	is the Public Adviser of the Commission.

Term	Definition
PUBLIC AREAS	are spaces generally open to the public at large, customers, congregation members, or similar spaces, where occupants need to be prevented from controlling lights for safety, security, or business reasons.
PUBLIC MONUMENTS	See *Outdoor Lighting*
RADIANT BARRIER	is a highly reflective, low emitting material installed at the underside surface of the roof deck and the inside surface of gable ends or other exterior vertical surfaces in attics to reduce solar heat gain into the attic, as specified by Section 151(f)2.
RAISED FLOOR	is a floor (partition) over a crawl space, or an unconditioned space, or ambient air.
READILY ACCESSIBLE	is capable of being reached quickly for operation, repair or inspection, without requiring climbing or removing obstacles, or resorting to access equipment.
REAR	See *Back*.
RECOOL	is the cooling of air that has been previously heated by space conditioning equipment or systems serving the same building.
RECORD DRAWINGS	are drawings that document the as installed location and performance data on all lighting and space conditioning system components, devices, appliances and equipment, including but not limited to wiring sequences, control sequences, duct and pipe distribution system layout and sizes, space conditioning system terminal device layout and air flow rates, hydronic system and flow rates, and connections for the space conditioning system. Record drawings are sometimes called "as builts."
RECOVERED ENERGY	is energy used in a building that (1) is mechanically recovered from space conditioning, service water heating, lighting, or process equipment after the energy has performed its original function; (2) provides space conditioning, service water heating, or lighting; and (3) would otherwise be wasted.
RECOVERY EFFICIENCY	is one measure of the efficiency of water heaters. It is required for water heating energy calculations for some types of water heaters. It is a measure of the percentage of heat from combustion of gas or oil which is transferred to the water. For non-storage type water heaters, the recovery efficiency is really a thermal efficiency.
REDUCED FLICKER OPERATION	is the operation of a light, in which the light has a visual flicker less than 30% for frequency and modulation.
REFERENCE COMPUTER PROGRAM	is the reference method against which other methods are compared. For the nonresidential standards, the reference computer program is DOE 2.1E. For the low-rise residential standards the reference computer program is CALRES
REFLECTANCE, SOLAR	is the ratio of the reflected solar flux to the incident solar flux.

Term	Definition
REFRIGERANT CHARGE	is to the amount of refrigerant that is installed or "charged" into an air conditioner or heat pump. The refrigerant is the working fluid. It is compressed and becomes a liquid as it enters the condenser. The hot liquid is cooled in the condenser and flows to the evaporator where it released through the expansion valve. When the pressure is released, the refrigerant expands into a gas and cools. Air is passed over the evaporator to provide the space cooling. When an air conditioner or heat pump has too much refrigerant (overcharged) the compressor may be damaged. When an air conditioner has too little refrigerant (undercharged), the efficiency of the unit is reduced. A *thermostatic expansion valve (TXV)* can mitigate the impact of improper refrigerant charge.
REFRIGERATED CASE	is a manufactured commercial refrigerator or freezer, including but not limited to display cases, reach-in cabinets, meat cases, and frozen food and soda fountain units.
REHEAT	is the heating of air that has been previously cooled by cooling equipment or systems or an economizer.
RELATIVE SOLAR HEAT GAIN	is the ratio of solar heat gain through a fenestration product (corrected for external shading) to the incident solar radiation. Solar heat gain includes directly transmitted solar heat and absorbed solar radiation, which is then reradiated, conducted, or convected into the space.
RELIGIOUS WORSHIP	See *Occupancy Type*.
RELOCATABLE PUBLIC SCHOOL BUILDING	is a relocatable building as defined by Title 24, Part 1, Section 4-314, which is subject to Title 24, Part 1, Chapter 4, Group 1.
REPAIR	is the reconstruction or renewal of any part of an existing building for the purpose of its maintenance. NOTE: Repairs to low-rise residential buildings are not within the scope of these standards.
RESIDENTIAL BUILDING	See *High-Rise Residential Building and Low-Rise Residential Building*.
RESIDENTIAL MANUAL	is the manual developed by the Commission, under Section 25402.1 of the Public Resources Code, to aid designers, builders, and contractors in meeting energy efficiency standards for low-rise residential buildings.
RESTAURANT	See *Occupancy Type*.
RESTROOM	See *Occupancy Type*.
RETAIL MERCHANDISE SALES	See *Occupancy Type*.
RIGHT SIDE	is the right side of the building as one faces the front facade from the outside (see *Front*). This designation is used to indicate the orientation of fenestration and other surfaces, especially in model homes that are constructed in multiple orientations.
ROOF	See *Exterior Roof/Ceiling*.

Term	Definition
ROOF/CEILING TYPE	is a type of roof/ceiling assembly that has a specific framing type and U-factor.
RUNOUT	is piping that is no more than 12 feet long and that is connected to a fixture or an individual terminal unit.
R-VALUE	is the measure of the thermal resistance of insulation or any material or building component expressed in ft²-hr ºF/Btu. See *Thermal Resistance*
SALES CANOPY	See *Outdoor Lighting*
SC	See *Shading Coefficient.*
SCHOOL:	See *Occupancy Type*.
SCIENTIFIC EQUIPMENT	is measurement, testing or metering equipment used for scientific research or investigation, including but not limited to manufactured cabinets, carts and racks.
SCONCE	is a wall mounted ornamental luminaire.
SEASONAL ENERGY EFFICIENCY RATIO (SEER)	is the total cooling output of a central air conditioner in Btu during its normal usage period for cooling divided by the total electrical energy input in watt-hours during the same period, as determined using the applicable test method in the Appliance Efficiency Regulations.
SENIOR HOUSING	See *Occupancy Type*
SERIES FAN-POWERED TERMINAL UNIT	is a terminal unit that combines a VAV damper in series with a downstream fan which runs at all times that the terminal unit is supplying air to the space.
SERVICE WATER HEATING	is heating of water for sanitary purposes for human occupancy, other than for comfort heating.
SHADING	is the protection from heat gains because of direct solar radiation by permanently attached exterior devices or building elements, interior shading devices, glazing material, or adherent materials. Permanently attached means (a) attached with fasteners that require additional tools to remove (as opposed to clips, hooks, latches, snaps, or ties); or (b) required by the CBC for emergency egress to be removable from the interior without the use of tools.
SHADING COEFFICIENT (SC)	is the ratio of the solar heat gain through a fenestration product to the solar heat gain through an unshaded 1/8 inch thick clear double strength glass under the same set of conditions. For nonresidential, high-rise residential, and hotel/motel buildings, this shall exclude the effects of mullions, frames, sashes, and interior and exterior shading devices. See also *Solar Heat Gain Coefficient.*
SIDE FINS	are vertical shading elements mounted on either side of a glazed opening that can protect the glazing from lateral low angle sun penetration.

Term	Definition
SIGN	definitions include the following: **Illuminated face** is a side of a sign that has the message on it. For an exit sign it is the side that has the word "EXIT" on it. **Sign, cabinet** is an internally illuminated sign consisting of frame and face(s), with a continuous translucent message panel, also referred to as a panel sign **Sign, channel letter** is an internally illuminated sign with multiple components, each built in the shape of an individual three dimensional letter or symbol that are each independently illuminated, with a separate translucent panel over the light source for each element. **Sign, double-faced** is a sign with two parallel opposing faces. **Sign, externally illuminated** is any sign or a billboard that is lit by a light source that is external to the sign directed towards and shining on the face of the sign. **Sign, internally illuminated** is a sign that is illuminated by a light source that is contained inside the sign where the message area is luminous, including cabinet signs and channel letter signs.**Sign, traffic** is a sign for traffic direction, warning, and roadway identification. **Sign, unfiltered** is a sign where the viewer perceives the light source directly as the message, without any colored filter between the viewer and the light source, including neon, cold cathode, and LED signs.
SINGLE ZONE	is an HVAC system with a supply fan (and optionally a return fan) and heating and/or cooling heat exchangers (e.g. DX coil, chilled water coil, hot water coil, furnace, electric heater) that serves a single thermostatic zone. This system may or may not be constant volume.
SITE SOLAR ENERGY	is natural daylighting, or thermal, chemical, or electrical energy derived from direct conversion of incident solar radiation at the building site.
SITE-BUILT FENESTRATION	is fenestration designed to be field-glazed or field assembled units using specific factory cut or otherwise factory formed framing and glazing units that are manufactured with the intention of being assembled at the construction site and are provided with an NFRC label certificate for site-built fenestration. Examples of site-built fenestration include storefront systems, curtain walls, and atrium roof systems.
SKYLIGHT	is glazing having a slope less than 60 degrees from the horizontal with conditioned or unconditioned space below.
SKYLIGHT AREA	is the area of the rough opening for the skylight.

Term	Definition
SKYLIGHT TYPE	is a type of skylight assembly having a specific solar heat gain coefficient and U-factor, whether glass mounted on a curb, glass not mounted on a curb or plastic (assumed to be mounted on a curb).
SLAB-ON-GRADE	is an exterior concrete floor in direct contact with the earth below the building.
SMACNA	is the Sheet Metal and Air-conditioning Contractors National Association.
SMACNA RESIDENTIAL COMFORT SYSTEM INSTALLATION STANDARDS MANUAL	is the Sheet Metal Contractors' National Association document entitled "Residential Comfort System Installation Standards Manual, Seventh Edition" (1998).
SOFT COAT	is a low emissivity metallic coating applied to glass, which will be installed in a fenestration product through a sputter process where molecules of metals such as stainless steel or titanium are sputtered onto the surface of glass. Soft coats generally have lower emissivity than hard coats.
SOLAR HEAT GAIN COEFFICIENT (SHGC)	is the ratio of the solar heat gain entering the space through the fenestration area to the incident solar radiation. Solar heat gain includes directly transmitted solar heat and absorbed solar radiation, which is then reradiated, conducted, or convected into the space.
SOLAR REFLECTANCE	See *Reflectance.*
SOUTH-FACING	is oriented to within 45 degrees of true south including 45°00'00" west of south (SW), but excluding 45°00'00" east of south (SE).
SPA	is a vessel that contains heated water, in which humans can immerse themselves, is not a pool, and is not a bathtub.
SPACE CONDITIONING SYSTEM	is a system that provides either collectively or individually heating, ventilating, or cooling within or associated with conditioned spaces in a building. The system may operate alone or in conjunction with other systems. See *Heating, Ventilating and Air Conditioning*.
SPACER, ALUMINUM	is a metal channel that is used either against the glass (sealed along the outside edge of the insulated glass unit), or separated from the glass by one or more beads of caulk, which is used to separate panes of glass in an insulated glass unit.
SPACER, INSULATING	is a non-metallic, relatively non-conductive material, usually of rubber compounds, that is used to separate panes of glass in an insulated glass unit.
SPACER, OTHER	is a wood, fiberglass, or composite material that is used as a spacer between panes of glass in insulated glass units.
SPACER, SQUIGGLE	is a flexible material, usually butyl, formed around a thin corrugated aluminum strip that is used as a spacer in insulated glass units.

Term	Definition
SPECIFIC HEAT	is the quantity of heat that must be added to a unit mass of a material to increase its temperature by one degree. Typical units are Btu/ºF-lb.
SPLIT SYSTEM AIR CONDITIONER OR HEAT PUMP	Is an air conditioner or heat pump that has physically separate condenser and air handling units that work together as a single cooling system.
STAIRS, ACTIVE / INACTIVE	See *Occupancy Type*.
STANDARD DESIGN	is a hypothetical building that is used to calculate the custom budget for nonresidential and residential buildings. A new building or addition alone complies with the standards if the predicted source energy use of the *proposed design* is the same or less than the annual budget for space conditioning and water heating of the Standard Design. The Standard Design is substantially similar to the Proposed Design, except it is in exact compliance with the prescriptive requirements and the mandatory measures.
STANDARDS	See *Building Energy Efficiency Standards*.
STANDBY LOSS, BTU/HR	is the heat lost per hour from the stored water above room temperature. It is one of the measures of efficiency of water heaters required for water heating energy calculations for some types of water heaters. This standby loss is expressed as Btu/hr.
STANDBY LOSS, PERCENT	is the ratio of heat lost per hour to the heat content of the stored water above room temperature. It is one of the measures of efficiency of water heaters required for water heating energy calculations for some types of water heaters. Standby loss is expressed as a percentage.
STEPPED DIMMING	is a lighting control method that varies the light output of lamps in one or more predetermined discrete steps between full light output and off.
STEPPED SWITCHING	is a lighting control method that varies the light output of a lighting system with the intent of maintaining approximately the relative uniformity of illumination by turning off alternate groups of lamps or luminaires.
SUBORDINATE OCCUPANCY	is any occupancy type, in mixed occupancy buildings, that is not the dominant occupancy. See *Dominant Occupancy, Mixed Occupancy*.
SUCTION LINE	is the refrigerant line that leads from the evaporator to the condenser in a split system air conditioner or heat pump. This line is insulated since it carries refrigerant at a low temperature.
SUPPORT AREA	See *Occupancy Type*.
SUSPENDED FILMS	are low-e coated plastic films stretched between the elements of the spacers between panes of glazing; acts as a reflector to slow the loss of heat from the interior to the exterior.

Term	Definition
SYSTEM	is a combination of equipment, controls, accessories, interconnecting means, or terminal elements by which energy is transformed to perform a specific function, such as space conditioning, service water heating, or lighting.
TASK LIGHTING	is lighting that is designed specifically to illuminate a task location, and that is generally confined to the task location. See also *Lighting*, *General Lighting*.
TDV ENERGY	See *Time Dependent Valuation (TDV) Energy*.
TEMPORARY LIGHTING	is a lighting installation where temporary connections, such as cord and plug, are used for electric power, and for which the installation does not persist beyond 60 consecutive days or more than 120 days per year.
TEMPORARY LIGHTING	is a lighting installation where temporary connections, such as cord and plug, are used for electric power, and for which the installation shall not persist beyond 60 days or more than 120 days per year.
TENANT LEASE SPACE	See *Occupancy Type*
THEATER, MOTION PICTURE	See *Occupancy Type*.
THEATER, PERFORMANCE:	See *Occupancy Type*.
THERMAL BREAK WINDOW FRAME	is metal fenestration frames that are not solid metal from the inside to the outside, but are separated in the middle by a material, usually urethane, with a lower conductivity.
THERMAL CONDUCTIVITY	is the quantity of heat that will flow through a unit area of the material per hour when the temperature difference through the material is one degree.
THERMAL EMITTANCE	See *Emittance.*
THERMAL MASS	is solid or liquid material used to store heat for later heating use or for reducing cooling requirements.
THERMAL RESISTANCE (R)	is the resistance of a material or building component to the passage of heat in (hr. x ft.^{2} x ºF)/Btu.
THERMOSTATIC EXPANSION VALVE (TXV)	is a refrigerant metering valve, installed in an air conditioner or heat pump, which controls the flow of liquid refrigerant entering the evaporator in response to the superheat of the gas leaving it.
THROW DISTANCE	is the distance between the luminaire and the center of the plane lit by the luminaire on a display.
TIME DEPENDENT VALUATION (TDV) ENERGY	is the time varying energy caused to be used at by the building to provide space conditioning and water heating and for specified buildings lighting, accounting for the energy used at the building site and consumed in producing and in delivering energy to a site, including, but not limited to, power generation, transmission and distribution losses.

Term	Definition
TITLE 24	is all of the building standards and associated administrative regulations published in Title 24 of the *California Code of Regulations*. The *Building Energy Efficiency Standards* are contained in Part 6. Part 1 contains the administrative regulations for the building standards.
TRAFFIC SIGN	See *Sign*
U-FACTOR	is the overall coefficient of thermal transmittance of a construction assembly, in Btu/(hr. x ft.^{2} x ºF), including air film resistance at both surfaces.
UIMC	See *Unit Interior Mass Capacity*
UL	is the Underwriters Laboratories.
UL 181	is the Underwriters Laboratories document entitled "Standard for Factory-Made Air Ducts and Air Connectors," 1996.
UL 181A	is the Underwriters Laboratories document entitled "Standard for Closure Systems for Use With Rigid Air Ducts and Air Connectors," 1994.
UL 181B	is the Underwriters Laboratories document entitled "Standard for Closure Systems for Use With Flexible Air Ducts and Air Connectors," 1995.
UL 723	is the Underwriters Laboratories document entitled "Standard for Test for Surface Burning Characteristics of Building Materials," 1996.
UL 727	is the Underwriters Laboratories document entitled "Standard for Oil-Fired Central Furnaces," 1994.
UL 731	is the Underwriters Laboratories document entitled "Standard for Oil-Fired Unit Heaters," 1995.
UL 1598	is the Underwriters Laboratories document entitled "Standard for Luminaires," 2000.
UNCONDITIONED SPACE	is enclosed space within a building that is not directly conditioned or indirectly conditioned.
UNFILTERED SIGN	See *Sign*
UNIT INTERIOR MASS CAPACITY (UIMC)	is the amount of effective heat capacity per unit of thermal mass, taking into account the type of mass material, thickness, specific heat, density and surface area. See also *Thermal Mass*.
U-VALUE	See *U-factor*.
VAPOR BARRIER	is a material that has a permeance of one perm or less and that provides resistance to the transmission of water vapor.
VARIABLE AIR VOLUME (VAV) SYSTEM	is a space conditioning system that maintains comfort levels by varying the volume of conditioned air to the zones served.
VEHICLE SERVICE STATION CANOPY	See *Outdoor Lighting*

Term	Definition
VENDING MACHINE	is a commercial, coin operated machine for vending of refrigerated or nonrefrigerated food and beverages or general merchandise.
VENTILATION AIR	is that portion of supply air which comes from outside plus any recirculated air that has been treated to maintain the desired quality of air within a designated space. See also *Outside Air*.
VERTICAL GLAZING	See *Window*.
VERY VALUABLE MERCHANDISE	is rare or precious objects, including, but not limited to, jewelry, coins, small art objects, crystal, china, ceramics, or silver, the selling of which involves customer inspection of very fine detail from outside of a locked case.
VINYL WINDOW FRAME	is a fenestration frame constructed with a polyvinyl chloride (PVC) which has a lower conductivity than metal and a similar conductivity to wood.
VISIBLE LIGHT TRANSMITTANCE (VLT)	is the ratio (expressed as a decimal) of visible light that is transmitted through a glazing material to the light that strikes the material.
VOCATIONAL ROOM	See *Occupancy Type*.
WAITING AREA	*See Occupancy Type*
WALL TYPE	is a type of wall assembly that has a specific heat capacity, framing type, and U-factor.
WEATHERSTRIPPING	is a specially designed strip, seal or gasket attached to doors and windows to prevent infiltration and exfiltration through cracks around the openings. Weatherstripping is one of the mandatory requirements for all new residential construction. See *Infiltration, Exfiltration*.
WEIGHTED AVERAGING	is an arithmetic technique for determining an average of differing values for the members of a set by weighting each value by the extent to which the value occurs. In some cases when two or more types of a building feature, material or construction assembly occur in a building, a weighted average of the different types may be sufficiently accurate to represent the energy impact of each type considered separately.
WEST-FACING	is oriented to within 45 degrees of true west, including 45°00'00" north of due west (NW), but excluding 45°00'00" south of west (SW).
WHOLESALE SHOWROOM:	See *Occupancy Type*.
WINDOW	is fenestration that is not a skylight.
WINDOW AREA	is the area of the surface of a window, plus the area of the frame, sash, and mullions.
WINDOW TYPE	is a window assembly having a specific solar heat gain coefficient, relative solar heat gain, and U-factor.
WINDOW WALL RATIO	is the ratio of the window area to the gross exterior wall area.

Term	Definition
WOOD HEATER	is an enclosed wood burning appliance used for space heating and/or domestic water heating.
WOOD STOVE	See *Wood Heater*.
ZONAL CONTROL	is the practice of dividing a residence into separately controlled HVAC zones. This may be done by installing multiple HVAC systems that condition a specific part of the building, or by installing one HVAC system with a specially designed distribution system that permits zonal control. The Energy Commission has approved an alternative calculation method for analyzing the energy impact of zonally controlled space heating and cooling systems. To qualify for compliance credit for zonal control, specific eligibility criteria specified in the Residential ACM Manual must be met.
ZONE, SPACE CONDITIONING	is a space or group of spaces within a building with sufficiently similar comfort conditioning requirements so that comfort conditions, as specified in Section 144 (b) 3 or 150 (h), as applicable, can be maintained throughout the zone by a single controlling device for each zone.

JOINT APPENDIX II

Reference Weather/Climate Data

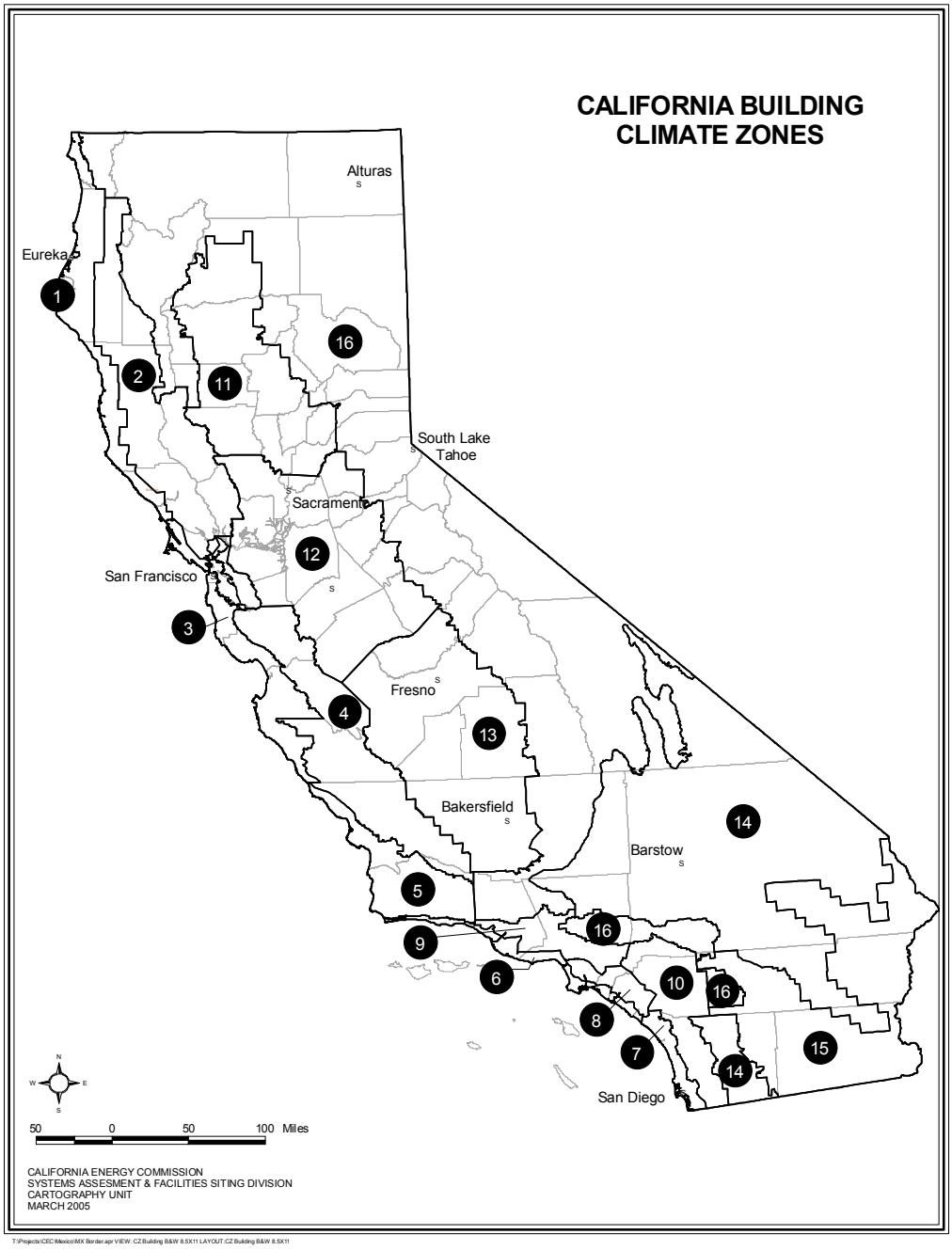

Figure II-1 – Climate Zone Map

II.1 Weather Data - General

All energy calculations used for compliance with the Standards must use the Commission's sixteen (16) official hourly weather files. These files are available in electronic form from the Commission in the WYEC2 (Weather Year for Energy Calculations) format and in DOE 2.1E packed weather data format. Temperatures in the WYEC2 files for the sixteen climate zones have been adjusted to the average means and extremes of the weather data of the reliable substations in each climate zone.[1] The WYEC2 data may be adjusted for local conditions, condensed, statistically summarized or otherwise reduced, as long as:

1. The weather data used to derive the simplified or reduced data is the Commission's official hourly weather data; and,
2. The ACM program meets all of the certification tests using the reduced weather data.

Whatever weather data and/or weather data reduction methods are used, ACM approval is contingent upon approved weather data being used for all compliance runs.

There are 16 climate zones, each with 8,760 hourly records containing raw data on a variety of ambient conditions such as:

- Dry bulb temperature
- Wet bulb temperature
- Wind speed and direction
- Direct solar radiation
- Diffuse radiation

Each climate zone file includes the non-temperature data of a particular city whose annual climate data has been judged representative of the construction locations within that zone. The values listed by climate zone and the nominal city location for each climate zone in Table II.3 in this section must be used for any given climate zone if the ACM does not automatically make local city weather adjustments to the files.

As indicated above the reference method uses local city ASHRAE design data to adjust the climate zone weather data. These adjustments customize the temperature data, especially the extremes, to conform to the ASHRAE design data statistics for the city in question. This makes the HVAC sizing and energy calculations more realistic for energy compliance simulations.

[1] See *Climate Zone Weather Data Analysis and Revision Project*, Final Consultant Report, CEC Publication # P400-92-004, for more detail.

Table II-1 –California Climate Zone Summary

Climate Zone	City	Latitude	Longitude	Elevation
1	Arcata	40.8	124.2	43
2	Santa Rosa	38.4	122.7	164
3	Oakland	37.7	122.2	6
4	Sunnyvale	37.4	122.4	97
5	Santa Maria	34.9	120.4	236
6	Los Angeles AP	33.9	118.5	97
7	San Diego	32.7	117.2	13
8	El Toro	33.6	117.7	383
9	Burbank	34.2	118.4	655
10	Riverside	33.9	117.2	1543
11	Red Bluff	40.2	122.2	342
12	Sacramento	38.5	121.5	17
13	Fresno	36.8	119.7	328
14	China Lake	35.7	117.7	2293
15	El Centro	32.8	115.6	-30
16	Mt. Shasta	41.3	122.3	3544

II.2 Counties and Cities with Climate Zone Designations

The following pages are a listing of California counties and cities with a climate zone designation for each. This information represents an abridged version of the Commission publication *California Climate Zone Descriptions* which contains detailed survey definitions of the sixteen climate zones.

Table II-2 – Counties and Cities with Climate Zone Designations

City	CZ
Alameda County (Zones 3, 12)	
Alameda	3
Albany	3
Altamont	12
Ashland	3
Berkeley	3
Calaveras Reservoir	12/4
Castro Valley	3
Cherryland	3
Corral Hollow	12
Dublin	12
Emeryville	3
Fremont	3
Hayward	3
Lake Del Valley	12
Livermore	12
Midway	12
Mount Eden	3
Newark	3
Oakland AP	3
Piedmont	3
Pleasanton	12
San Antonio Reservoir	12
San Leandro	3
San Lorenzo	3
Sunol	12
U.S.N. Air Station,	3
U.S.N. Supply Center,	3
Union City	3
Upper San Leandro	3
Alpine County (Zone16)	
Caples Lake	16
Carson River (East Fork)	16
Carson River (West Fork)	16
Ebbetts Pass	16
Freel Peak	16
Grover Hot Springs	16
Highland Peak	16
Lake Alpine	16
Markleeville	16
Woodfords	16
Amador County (Zones 12, 16)	
Amador	12
Bear River	16
Buena Vista	12
Camanche Reservoir	12
Carbondale	12
Cooks Station	16
Drytown	12
Electra Power House	12
Fiddletown	12
Ione	12
Jackson	12
Martell	12
Pardee Reservoir	12
Pine Grove	12
Pioneer	16
Plasse	16
Plymouth	12
River Pines	12
Salt Springs Reservoir	16
Silver Lake	16
Sutter Creek	12
Tiger Creek Power House	12
Volcano	12
Butte County (Zones 11, 16)	
Bangor	11
Berry Creek	11
Big Bend	16
Biggs	11
Brush Creek	16
Butte Meadows	16
Centerville Power House	11
Cherokee	11
Chico	11
Clipper Mills	16
Cohasset	11
Dayton	11
De Sabla	11
Durham	11
East Biggs	11
Feather Falls	16
Feather River (Middle Fork)	16
Feather River (North Fork)	16
Forbestown	16
Forest Ranch	11
Gridley	11
Honcut	11
Inskip	16
Jonesville	16
Lake Oroville	11
Lake Wyandotte	11
Las Plumas	11
Lomo	16
Magalia	11
Nelson	11
Nord	11
Oroville	11
Oroville East	11
Palermo	11
Paradise	11
Pentz	11
Pulga	16
Richardson Springs	11
Richvale	11
South Oroville	11
Stirling City	16
Thermalito	11
Thermalito Afterbay	11
Thermalito Forebay	11
Tiger Creek Power House	11
Wyandotte	11
Calaveras County (Zones 12, 16)	
Altaville	12
Angels Camp	12
Arnold	16
Burson	12
Camanche Reservoir	12
Calaveritas	12
Camp Pardee	12
Campo Seco	12
Copperopolis	12
Dorrington	16
Fourth Crossing	12
Ganns	16
Glencoe	12
Hathaway Pines	16
Jenny Lind	12
Melones Reservoir	12
Milton	12
Mokelumne Hill	12

City	CZ
Mountain Ranch	12
Murphys	12
New Hogan Reservoir	12
Paloma	12
Pardee Reservoir	12
Rail Road Flat	12
Salt Springs Reservoir	16
Salt Springs Valley	12
San Andreas	12
Sheep Ranch	12
Stanislaus	16
Vallecito	12
Valley Springs	12
Wallace	12
West Point	12
Wilseyville	12
Colusa County (Zone 11)	
Arbuckle	11
College City	11
Colusa	11
Colusa Trough	11
Delevan	11
East Park Reservoir	11
Fouts Springs	11
Glenn Colusa Canal	11
Grimes	11
Leesville	11
Lodoga	11
Maxwell	11
Princeton	11
Sites	11
Stonyford	11
Sycamore	11
Wilbur Springs	11
Williams	11
Contra Costa County (Zones 3, 12)	
Alamo	12
Antioch	12
Bethel Island	12
Blackhawk	12
Brentwood	12
Briones Reservoir	12
Byron	12
Clayton	12
Concord	12
Crockett	12
Danville	12
Diablo	12
Discovery Bay	12
El Cerrito	3
El Sobrante	3
Hercules	3
Knightsen	12

City	CZ
Lafayette	12
Martinez	12
Moraga	12
Mount Diablo	12
Oakley	12
Old River	12
Orinda	12
Pacheco	12
Pinole	3
Pittsburg	12
Pleasant Hill	12
Port Chicago	12
Richmond	3
Rodeo	3
Saint Mary's College	12
San Pablo	3
San Ramon	12
Suisun Bay	12
Tassajara	2
U.S.N. Weapons Station,	12
Vine Hill	3
Walnut Creek	12
West Pittsburg	12
Del Norte County (Zones 1, 16)	
Crescent City	1
Elk Valley	16
Fort Dick	1
Gasquet	16
Gordon Mountain	16
Hiouchi	1
Horse Flat	16
Idlewild	1
Klamath	1
Klamath Glen	1
Lake Earl	1
Patrick Creek	16
Point Saint George	1
Red Mountain	16
Requa	1
Siskiyou Mountains	16
Smith River	1
Smith River (Middle Fork)	16
Smith River (North Fork)	16
Smith River (South Fork)	16
El Dorado County (Zones 12, 16)	
American River (Silver	16
Aukum	12
Bijou	16
Cameron Park	12
Camino	12
Camp Richardson	16
Clarksville	12
Coloma	12

City	CZ
Cool	12
Diamond Springs	12
Echo Lake	16
Echo Summit	16
El Dorado	12
El Dorado Hills	12
Fallen Leaf Lake	16
Freel Peak	16
Garden Valley	12
Georgetown	12
Greenwood	12
Grizzly Flat	16
Kelsey	12
Kyburz	16
Lake Tahoe	16
Latrobe	12
Loon Lake Reservoir	16
Lotus	12
Meeks Bay	16
Meyers	16
Omo Ranch	16
Outingdale	12
Pacific	16
Pilot Hill	12
Placerville	12
Pollock Pines	16
Rescue	12
Rubicon River	16
Saddle Mountain	16
Shingle Springs	12
Smithflat	12
Somerset	12
South Lake Tahoe	16
Twin Bridges	16
Union Valley Reservoir	16
Vade	16
Volcanoville	16
Fresno County (Zones 13, 16)	
Academy	13
Arroyo Hondo	13
Auberry	13
Big Creek	16
Biola	13
Black Mountain	13
Bonadella Ranchos –	13
Bowles	13
Burrelield	13
Calflax	13
Calwa	13
Caruthers	13
Cedar Grove	16
Centerville	13
Clovis	13
Coalinga	13

City	CZ
Conejo	13
Courtright Reservoir	16
Del Rey	13
Dinkey Creek	16
Dunlap	13
Easton	13
Figarden	13
Firebaugh	13
Five Points	13
Florence Lake	16
Fowler	13
Fresno	13
Fresno Slough	13
Friant	13
Helm	13
Herndon	13
Highway City	13
Hume	16
Humphreys Station	13
Huntington Lake	16
Huron	13
Ivesta	13
Jamesan	13
Kalser Peak	16
Kerman	13
Kings River	13
Kings River (Middle Fork)	16
Kings River (North Fork)	16
Kings River (South Fork)	16
Kingsburg	13
Lakeshore	16
Lanare	13
Laton	13
Little Panoche	13
Mammoth Pool Reservoir	16
Malaga	13
Meadow Lakes	16
Mendota	13
Millerton Lake	13
Miramonte	13
Monmouth	13
Mono Hot Springs	16
Mount Darwin	16
Mount Pinchot	16
Navelencia	13
New Auberry	13
Oilfields	13
Orange Cove	13
Oro Loma	13
Oxalis	13
Parlier	13
Piedra PO	13
Pine Canyon	13
Pine Ridge	16
Pinedale	13

City	CZ
Pinehurst	16
Prather	13
Raisin City	13
Reedley	13
Riverdale	13
Roaring River	16
Rolinda	13
San Joaquin	13
Sanger	13
Selma	13
Shaver Lake	16
Silver Creek	13
Spanish Mountain	16
Squaw Valley	13
Thomas A. Edison Lake	16
Three Rocks	13
Tollhouse	13
Tranquillity	13
Trimmer	16
Turk	13
Vermilion Valley Dam	16
Westhaven	13
Wishin Reservoir	16
Glenn County (Zones 11, 16)	
Artois	11
Bayliss	11
Black Butte	16
Black Butte Reservoir	11
Butte City	11
Chrome	11
Codora	11
Elk Creek	11
Fruto	11
Glenn	11
Greenwood	11
Hamilton City	11
High Peak	11
Logandale	11
Newville	11
Ordbend	11
Orland	11
Stony Gorge Reservoir	11
Willows	11
Humboldt County (Zones 1, 2, 16)	
Alderpoint	2
Alton	1
Arcata	1
Arcata Bay	1
Bayside	1
Bear Buttes	2
Bear River	1
Benbow	2
Big Lagoon	1

City	CZ
Blocksburg	2
Blue Lake	1
Briceland	2
Bridgeville	2
Bull Creek	1
Butler Valley	1
Cape Mendocino	1
Capetown	1
Carlotta	1
Centerville	1
Crannell	1
Cutten	1
Dinsmores	2
Eel Rock	2
Elk River	1
Elk River (North Fork)	1
Elk River (South Fork)	1
Ettersburg	1
Eureka	1
Falk	1
Fernbridge	1
Ferndale	1
Fieldbrook	1
Fields Landing	1
Fort Seward	2
Fortuna	1
Freshwater	1
Garberville	2
Harris	2
Holmes	1
Honeydew	1
Hoopa	2
Humboldt Bay	1
Hupa Mountain	1
Hydesville	1
Johnsons	1
King Range	1
Kneeland	1
Korbel	1
Little River	1
Loleta	1
Mail Ridge	2
Maple Creek	1
Mattole River	1
Mattole River (North Fork)	1
Mattole River (South Fork)	1
McCann	2
McKinleyville	1
Miranda	2
Mount Lassic	2
Myers Flat	2
Orick	1
Orleans	2
Patricks Point	1
Pepperwood	1

City	CZ
Petrolia	1
Phillipsville	2
Point Delgada	1
Redcrest	1
Redway	2
Richardson Grove	2
Rio Dell	1
Rohnerville	1
Salmon Mountain	16
Salt River	1
Samoa	1
Scotia	1
Sequoia	2
Shelter Cove	1
Shively	1
South Fork	1
Taylor Peak	1
Trinidad	1
Trinidad Head	1
Waddington	1
Weitchpec	2
Weott	1
Westhaven	1
Whitehorn	1
Willlow Creek	2
Imperial County (Zones 14, 15)	
Acolita	15
Alamo River	15
Amos	15
Andrade	15
Araz Wash	15
Arroyo Salada	15
Bard	15
Bombay Beach	15
Bonds Corner	15
Brawley	15
Calexico	15
Calipatria	15
Carrizo Wash	15
Clyde	15
Coyote Wash	15
Desert Shores	15
Dixieland	15
East Mesa	15
El Centro	15
Ferguson Lake	15
Frink	15
Glamis	15
Gold Rock Rch	15
Gordons Well	15
Heber	15
Holtville	15
Imperial	15
Imperial Dam	15

City	CZ
Imperial Reservoir	15
Imperial Valley	15
Iris	15
Laguna Dam	15
Mammoth Wash	15
Midwell Well	14
Mount Signal	15
Mountain Spring	15
Niland	15
Ocotillo	15
Ogilby	15
Orita	15
Palm Wash	15
Palo Verde	15
Picacho	15
Picacho Wash	15
Pinto Wash	15
Plaster City	15
Quartz Peak	15
Salton City	15
Salton Sea	15
Sand Hills	15
Sandia	15
Seeley	15
Senator Wash	15
Superstition Mountain	15
Tule Wash	15
U.S.N. Air Field, El Centro	15
Unnamed Wash	15
Vinagre Wash	15
West Mesa	15
Westmorland	15
Wiest	15
Winterhaven	15
Wister	15
Yuha Desert	15
Inyo County (Zones 14, 16)	
Airport Lake	14
Amargosa Range	14
Amargosa River	14
Argus Peak	16
Argus Range	16
Ballarat	14
Bartlett	16
Bennetts Well	14
Big Pine	16
Bishop	16
Cartago	16
Cerro Gordo Peak	16
Chloride City	16
Coso Hot Springs	16
Coso Junction	16
Coso Peak	16
Coso Range	16

City	CZ
Cottonwood Canyon	14/16
Cottonwood Mountains	16
Darwin	16
Darwin Wash	16
Death Valley	14
Death Valley Junction	14
Death Valley Wash	14
Deep Springs	16
Deep Springs Lake	16
Dolomite	16
Dunmovin	16
Echo Canyon	14
Emigrant Canyon	16
Eureka Valley	16
Fish Springs	16
Franklin Well	14
Funeral Park	14
Furnace Creek Wash	14
Glacier	16
Greenwater Range	14
Haiwee Reservoir	16
Independence	16
Inyo Mountains	16
Kearsarge	16
Keeler	16
Keough Hot Springs	16
Last Chance Range	16
Laws	16
Lee Wash	16
Little Lake	16
Loco	16
Lone Pine	16
Lostman Spring	16
Manley Peak	16
Marble Canyon	16
Midway Well	14
Miller Spring	14
Mount Darwin	16
Mount Morgan	16
Mount Whitney	16
Nopah Range	14
Olancha	16
Olancha Peak	16
Owens Lake	16
Owens River	16
Owens Valley	16
Owenyo	16
Owlshead Mountains	14
Pahrump Valley	14
Paiute Canyon	16
Panamint	16
Panamint Range	16
Panamint Springs	14
Panamint Valley	14
Pleasant Grove	16

City	CZ
Red Wall Canyon	16
Renegade Canyon	16
Rhodes Wash	14
Rovana	16
Ryan	14
Saline Valley	16
Salt Lake	16
Sawtooth Peak	16
Scheelite	16
Scottys Castle	16
Sheep Canyon	14
Shoshone	14
Skidoo	16
Slate Range	14
Sourdough Spring	16
Spanish Spring	16
Stovepipe Wells	14
Teakettle Junction	16
Tecopa	14
Telescope Peak	16
Tinemaha Reservoir	16
Titus Canyon	16
Valley Wells	14
Waucoba Mountain	16
Waucoba Wash	16
White Mountains	16
Wildrose RS	16
Willow Creek Camp	16
Wingate Wash	14
Kern County (Zones 13, 14, 16)	
Actis	14
Adobe	13
Alta Sierra	16
Antelope Plain	13
Arvin	13
Bakersfield	13
Bissell	14
Blackwells Corner	13
Bodfish	16
Boron	14
Breckenridge Mountain	16
Brown	14
Buckhorn Lake	14
Buena Vista Lake Bed	13
Buttonwillow	13
Calders Corner	13
Caliente	16
California City	14
Cantil	14
China Lake	14
Claraville	16
Conner	13
Cuddy Canyon	16
Delano	13

City	CZ
Derby Acres	13
Devils Den	13
Di Giorgio	13
Edison	13
Edwards Air Force Base	14
El Paso Mountains	14
Famoso	13
Fellows	13
Ford City	13
Frazier Park	16
Freeman Junction	14
Fremont Valley	14
Garlock	14
Glennville	16
Gold Canyon	16
Golden Hills	16
Grapevine	13
Greenacres	13
Greenfield	13
Greenhorn Mountains	16
Havilah	16
Hillcrest Center	16
Indian Wells Valley	14
Inyokern	14
Isabella Reservoir	16
Jasmin	13
Johannesburg	14
Kecks Corner	13
Keene	16
Kern River (South Fork)	16
Kernville	16
Koehn Lake	14
Lake Isabella	16
Lakeview	13
Lamont	13
Last Chance Canyon	14
Lebec	16
Little Dixie Wash	14
Lone Tree Canyon	16
Loraine	16
Lost Hills	13
Maricopa	13
McFarland	13
McKittrick	13
Mettler	13
Miracle Hot Springs	16
Mojave	14
Monolith	16
Neuralia	14
North Edwards	14
Oildale	13
Old River	13
Onyx	16
Orchard Peak	13
Pond	13

City	CZ
Rag Gulch	13
Randsburg	14
Ridgecrest	14
Rogers Lake	14
Rosamond	14
Rosamond Lake	14
Saltdale	14
Searles	14
Shafter	13
Stevens	13
Taft	13
Taft Heights	13
Tehachapi	16
Tehachapi Mountains	16
Tehachapi Pass	16
Tupman	13
Walker Pass	16
Wasco	13
Weed Patch	13
Weldon	16
Wheeler Ridge	13
Willow Springs	14
Wofford Heights	16
Woody	13
Kings County (Zone 13)	
Armona	13
Avenal	13
Corcoran	13
Corcoran Reservoir	13
Grangeville	13
Guernsey	13
Hanford	13
Hardwick	13
Kern River Channel	13
Kettleman City	13
Kettleman Hills	13
Kings River	13
Lemoore	13
Stratford	13
Tulare Lake Bed	13
Tule River	13
U.S.N. Air Station,	13
Lake County (Zone 2)	
Barkerville	2
Bartlett Springs	2
Clearlake	2
Clearlake Highlands	2
Clearlake Oaks	2
Clearlake Park	2
Cobb	2
Finley	2
Glenhaven	2
Hobergs	2

City	CZ
Kelseyville	2
Lake Pillsbury	2
Lakeport	2
Lower Lake	2
Lucerne	2
Mayacmas Mountains	2
Middletown	2
Mount Konocti	2
Nice	2
Upper Lake	2
Lassen County (Zone 16)	
Beckwourth Pass	16
Bieber	16
Big Valley Mountains	16
Buntingville	16
Calneva	16
Clear Creek	16
Constantia	16
Crater Mountain	16
Diamond Mountains	16
Doyle	16
Eagle Lake	16
Eagle Lake Resort	16
Fleming Fish & Game	16
Fredonyer Peak	16
Goumaz	16
Halls Flat	16
Hayden Hill	16
Herlong	16
Honey Lake	16
Horse Lake	16
Janesville	16
Jellico	16
Johnstonville	16
Karlo	16
Leavitt	16
Litchfield	16
Little Valley	16
Lodgepole	16
Madeline	16
Madeline Plains	16
Mason Station	16
McDonald Peak	16
Milford	16
Moon Lake	16
Mountain Meadows	16
Norvell	16
Nubieber	16
Observation Peak	16
Pit River (town)	16
Plumas	16
Ravendale	16
Sage Hen	16
Scotts	16

City	CZ
Sierra Army Depot	16
Skedaddle Mountains	16
Stacy	16
Standish	16
Susan River	16
Susanville	16
Termo	16
Tule Mountain	16
Viewland	16
Wendel	16
Westwood	16
Los Angeles County (Zones 6, 8, 9, 14, 16)	
Acton	14
Agoura Hills	9
Agua Duice	9
Alhambra	9
Aliso Canyon	16
Alondra Park	6
Altadena	9
Antelope Center	14
Antelope Valley	14
Arcadia	9
Artesia	8
Avalon	6
Avocado Heights	16
Azusa	9
Baldwin Park	9
Bassett	9
Bell	8
Bell Gardens	8
Bellflower	8
Beverly Hills	9
Big Pines	16
Big Rock Wash	14
Big Tujungs Canyon	16
Bradbury	9
Burbank	9
Calabasas	9
Canoga Park	9
Carson	6
Castaic	9
Caswell	16
Cerritos	8
Charter Oak	9
Chatsworth	9
City Terrace	9
Claremont	9
Commerce	8
Compton	8
Cornell	6
Covina	9
Cudahy	8
Culver City	8

City	CZ
Del Aire	6
Desert View Highland	14
Devils Canyon	16
Diamond Bar	9
Dominguez	8
Downey	8
Duarte	9
East Compton	8
East La Mirada	9
East Los Angeles	9
East Pasadena	16
East San Gabriel	9
East Whittier	9
El Monte	9
El Segundo	6
Elizabeth Lake Canyon	16
Encino	9
Fairmont	14
Florence	8
Gardena	8
Glendale	9
Glendora	9
Gorman	16
Granada Hills	9
Green Valley	16
Hacienda Heights	9
Harbor City	8
Hawaiian Gardens	8
Hawthorne	8
Hermosa Beach	6
Hi Vista	14
Hidden Hills	9
Hidden Springs	16
Highland Park	9
Hollywood	9
Huntington Park	8
Industry	9
Inglewood	8
Irwindale	9
Juniper Hills	14
La Canada Flintridge	9
La Crescenta	9
La Habra Heights	9
La Mirada	9
La Puente	9
La Verne	9
Ladera Heights	9
Lake Los Angeles	14
Lakewood	8
Lancaster	14
Lawndale	8
Lennox	8
Leona Valley	14
Little Rock Wash	4
Littlerock	14

City	CZ
Llano	14
Lomita	6
Long Beach	6/8
Los Angeles	8/9
Los Nietos	9
Lynwood	8
Malibu	6
Manhattan Beach	6
Marina del Rey	9
Maywood	8
Mira Canyon	9
Monrovia	9
Monte Nido	6
Montebello	9
Monterey Park	9
Montrose	9
Mount San Antonio	16
Mount Wilson	16
Newhall	9
North Hollywood	9
Northridge	9
Norwalk	8
Pacific Palisades	6
Pacoima	16
Pacoima Canyon	16
Palmdale AP	14
Palos Verdes Estates	6
Panorama City	9
Paramount	8
Pasadena	9
Pearblossom	14
Pearland	14
Pico Rivera	9
Point Dume	6
Point Fermin	6
Pomona	9
Pyramid Lake	16
Quartz Hill	14
Rancho Palos Verdes	6
Redman	14
Redondo Beach	6
Reseda	9
Rolling Hills	6
Rolling Hills Estates	6
Rosamond Lake	14
Rosemead	9
Rowland Heights	9
San Antonio Canyon	16
San Clemente Island	6
San Dimas	9
San Fernando	9
San Fernando Valley	9
San Gabriel	9
San Gabriel Mountains	16
San Gabriel River (West	16

City	CZ
San Marino	9
San Pedro	6
San Pedro Bay	6
Sandberg	16
Santa Catalina Island	6
Santa Clarita	9
Santa Fe Springs	9
Santa Monica	6
Santa Monica Bay	6
Santa Monica Mountains	6
Saugus	6
Sepulveda	9
Sepulveda Dam	9
Sherman Oaks	9
Sierra Madre	9
Signal Hill	6
Sleepy Valley	9
Solemint	9
South El Monte	9
South Gate	8
South Pasadena	9
South San Gabriel	9
South Whittier	9
Studio City	9
Sun Valley	9
Sunland	9
Sylmar	9
Tarzana	6
Tejon Pass	16
Tejon Rancho	16
Temple City	9
Three Points	14
Topanga	6
Topanga Beach	6
Topanga Canyon	6
Torrance	6
Tujunga	9
U.S.N. Facility, San	6
U.S.N. Shipyard, Long	6
UCLA	9
Val Verde Park	9
Valencia	9
Valinda	9
Valyermo	14
Van Nuys	9
Venice	6
Verdugo Mountains	9
Vernon	8
View Park	9
Vincent	14
Walnut	9
Walnut Park	8
West Athens	8
West Carson	6
West Compton	8

City	CZ
West Covina	9
West Hollywood	9
West Puente Valley	9
West Whittier-Los Nietos	9
Westlake Village	9
Westmont	8
Whittier	9
Whittier Narrows Dam	9
Willow Brook	8
Willowbrook	8
Wilsona Gardens	14
Woodland Hills	9
Zuma Canyon	6
Madera County (Zones 13, 16)	
Ahwahnee	13
Bass Lake	16
Berenda	13
Bonita	13
Chowchilla	13
Chowchilla Canal	13
Coarsegold	13
Dairyland	13
Daulton	13
Fairmead	13
Friant Dam	13
Kismet	13
Knowles	13
La Vina	13
Madera	13
Madera Acres	13
Madera Canal	13
Mammoth Pool Reservoir	16
Millerton Lake	13
Mount Lyell	16
North Fork	16
Oakhurst	13
O'Neals	13
Raymond	13
Red Top	13
Ripperdan	13
San Joaquin River (East	16
San Joaquin River (Middle	16
San Joaquin River (North	16
San Joaquin River (South	16
San Joaquin River (West	16
Sierra Nevada	16
Trigo	13
Wishin	16
Marin County (Zones 2, 3)	
Abbotts Lagoon	3
Angel Island	3
Belvedere	3
Black Point	2

City	CZ
Bodega Bay	3
Bolinas	3
Burdell	2
Corte Madera	2
Dillon Beach	3
Drakes Bay	3
Drakes Estero	3
Fairfax	2
Fallon	3
Forest Knolls	2
Fort Baker	3
Golden Gate	3
Gulf of the Farallones	3
Hamilton A.F.B.	2
Inverness	3
Kentfield	2
Larkspur	2
Marin City	3
Marshall	3
Mill Valley	3
Nicasio	2
Novato	2
Olema	3
Petaluma River	2
Point Bonita	3
Point Reyes	3
Point Reyes Station	3
Ross	2
San Anselmo	2
San Quentin	2
San Rafael	2
Santa Venetia	2
Sausalito	3
Stinson Beach	3
Tamalpais-Homestead	3
Tiburon	3
Tomales	3
Tomales Bay	3
Woodacre	2
Mariposa County (Zone 12, 16)	
Bagby	12
Bear Valley	12
Ben Hur	12
Bootjack	12
Briceburg	12
Buck Meadows	16
Catheys Valley	12
Coulterville	12
Darrah	12
Dudleys	12
El Portal	16
Fish Camp	16
Half Dome	16
Hornitos	12

City	CZ
Lake McClure	12
Mariposa	12
Merced River (South Fork)	16
Midpines	16
Mormon Bar	12
Mount Bullion	12
New Exchequer Dam	12
Pilot Peak	16
Usona	13
Wawona	16
Yosemite Valley	16
Yosemite Village	16
Mendocino County (Zones 1, 2,16)	
Albion	1
Anchor Bay	1
Arnold	2
Bell Springs	2
Black Butte River	16
Boonville	2
Branscomb	1
Bruhel Point	1
Burbeck	2
Cahto Peak	2
Calpella	2
Caspar	1
Cleone	1
Comptche	1
Covelo	2
Cummings	2
Dos Rios	2
Echo	2
Elk	1
Etsel Ridge	16
Fort Bragg	1
Gualala	1
Gualala River (South Fork)	1
Hales Grove	1
Hearst	2
Hopland	2
Inglenook	1
Lake Mendocino	2
Leech Lake Mountain	16
Leggett	1
Little River	1
Longvale	2
Manchester	1
Mendocino	1
Mina	2
Nashmead	2
Navarro	2
Northspur	2
Philo	2
Piercy	2
Pieta	2

City	CZ
Point Arena	1
Potter Valley	2
Ranch	1
Redwood Valley	2
Reynolds	2
Ridge	2
Rockport	1
Sanel Mountain	2
Spyrock	2
Talmage	2
Tatu	2
Ukiah	2
Westport	1
Williams Peak	2
Willits	2
Woodman	2
Yorkville	2
Merced County (Zone 12)	
Athlone	12
Atwater	12
Ballico	12
Castle Air Force Base	12
Cressey	12
Delhi	12
Dos Palos	12
El Nido	12
Gustine	12
Hilmar	12
Hopeton	12
Ingomar	12
Irwin	12
Le Grand	12
Livingston	12
Los Banos	12
Los Banos Reservoir	12
Merced	12
Merced Falls	12
Merced River	12
O'Neill Forebay	12
Plainsburg	12
Planada	12
San Luis Holding Reservoir	12
Santa Rita Park	12
Snelling	12
South Dos Palos	12
Stevinson	12
Tuttle	12
Volta	12
Winton	12
Modoc County (Zone 16)	
Adin	16
Alturas	16
Ambrose	16

City	CZ
Bayley	16
Big Sage Reservoir	16
Big Valley Mountains	16
Canby	16
Carr Butte	16
Cedarville	16
Clear Lake Reservoir	16
Cornell	16
Cow Head Lake	16
Dalton	16
Davis Creek	16
Day	16
Eagle Peak	16
Eagleville	16
Fandango Pass	16
Fletcher	16
Fort Bidwill	16
Goose Lake	16
Grouse Mountain	16
Hackamore	16
Hollenbeck	16
Jess Valley	16
Kandra	16
Kephart	16
Lake City	16
Lava Beds	16
Likely	16
Lookout	16
Lookout Junction	16
Lost River	16
Lower Lake	16
Mammoth	16
McArthur	16
Meares	16
Middle Alkali Lake	16
Mount Vida	16
Newell	16
Perez	16
Pit River (North Fork)	16
Pit River (South Fork)	16
Raker & Thomas Reservoir	16
Scarface	16
Surprise Valley	16
Tionesta	16
Upper Lake	16
Warner Mountains	16
White Horse	16
Whitehorse Flat Reservoir	16
Willow Ranch	16
Mono County (Zone 16)	
Benton	16
Benton Hot Springs	16
Bodie	16
Bridgeport	16

City	CZ
Bridgeport Reservoir	16
Chalfant	16
Chidago Canyon	16
Coleville	16
Cowtrack Mountain	16
Crestview	16
East Walker River	16
Fales Hot Springs	16
Glass Mountain	16
Grant Lake	16
June Lake	16
Lake Crowley	16
Leavitt Peak	16
Lee Vining	16
Little Walker River	16
Mammoth Lakes	16
Matterhorn Peak	16
McGee Canyon	16
Mono Lake	16
Mount Lyell	16
Mount Patterson	16
Oasis	16
River Springs Lakes	16
Sonora Pass	16
Tioga Pass	16
Toms Place	16
Topaz	16
Topaz Lake	16
Twin Lakes	16
West Walker River	16
White Mountains	16
White Mountain Peak	16
Monterey County (Zone 3, 4)	
Alisal	3
Alisal Slough	3
Aromas	3
Arroyo Seco	4
Big Sur	4
Big Sur River (North Fork)	4
Bolsa Knolls	3
Bradley	4
Bryson	4
Camp Roberts	4
Cape San Martin	4
Carmel Highlands	3
Carmel Valley	3
Carmel-by-the-Sea	3
Castroville	3
Cholame Hills	4
Chualar	3
Coburn	4
Del Rey Oaks	3
Elkhorn Slough	3
Fort Ord	3
Gonzales	3

City	CZ
Gorda	3
Greenfield	4
Jamesburg	4
Jolon	4
Junipero Serra Peak	4
King City	4
Lockwood	4
Lonoak	4
Lucia	3
Marina	3
Metz	4
Monterey	3
Monterey Bay	3
Moss Landing	3
Mount Carmel	4
Notleys Landing	3
Pacific Grove	3
Paraiso Springs	4
Parkfield	4
Pebble Beach	3
Pine Canyon	4
Point Lobos	3
Point Sur	3
Posts	3
Powell Canyon	4
Priest Valley	4
Prunedale	3
Reliz Canyon	4
Salinas	3
San Antonio Mission	4
San Antonio Reservoir	4
San Antonio River	4
San Antonio River (North	4
San Ardo	4
San Lucas	4
Sand City	3
Sargent Canyon	4
Seaside	3
Soledad	3
Spence	3
Spreckels	3
Tassajara Hot Springs	4
Thompson Canyon	4
U.S.N. Facility, Point Sur	3
Vineyard Canyon	4
Wunpost	4
Napa County (Zone 2, 12)	
American Canyon	2
Angwin	2
Berryessa Lake	2
Berryessa Peak	2/12
Calistoga	2
Duttons Landing	2
Knoxville	2

City	CZ
Lake Berryessa	2
Lake Henessey	2
Markley Cove	2
Mount Saint Helena	2
Napa	2
Napa Junction	2
Oakville	2
Pope Valley	2
Rutherford	2
Saint Helena	2
Sanitarium	2
Yountville	2
Nevada County (Zone 11, 16)	
Boca	16
Boca Reservoir	16
Cedar Ridge	11
Chicago Park	11
Deer Creek Power House	16
Donner Pass	16
Floriston	16
French Corral	11
Graniteville	16
Grass Valley	11
Higgins Corner	11
Hobart Mills	16
Jackson Meadows	16
La Barr	11
Lake Spaulding	16
Middle Yuba River	16
Nevada City	11
Norden	16
North Bloomfield	16
North Columbia	11
North San Juan	11
Penn Valley	11
Pilot Peak	11
Rough and Ready	11
Soda Springs	16
Truckee	16
Truckee River	16
Washington	16
Orange County (Zone 6, 8)	
Aliso Viejo	8
Anaheim	8
Brea	8
Buena Park	8
Capistrano Beach	6
Corona Del Mar	6
Costa Mesa	6
Coto De Caza	8
Cypress	8
Dana Point	6
East Irvine	8

City	CZ
El Toro	8
Emerald Bay	6
Fountain Valley	6
Fullerton	8
Garden Grove	8
Huntington Beach	6
Irvine	8
John Wayne AP	6
La Habra	9
La Palma	8
Laguna Beach	6
Laguna Hills	6/8
Laguna Niguel	6
Lake Forest	8
Los Alamitos	8
Mission Viejo	8
Modjeska	8
Newport Bay	6
Newport Beach	6
Orange	8
Placentia	8
Rancho Santa Margarita	8
Rossmoor	8
San Clemente	6
San Juan Capistrano	6
Santa Ana	8
Santiago Reservoir	8
Seal Beach	6
Silverado	8
South Laguna	6
Stanton	8
Sunset Beach	6
Surfside	6
Trabuco Canyon	8
Tustin	8
Tustin Foothills	8
U.S.M.C. Air Station, El	8
U.S.N. Air Station, Los	8
U.S.N. Weapons Station,	6
Villa Park	8
Westminster	6
Yorba Linda	8
Placer County (Zones 11, 16)	
Alta	16
Applegate	11
Auburn	11
Baxter	16
Blue Canyon	16
Bowman	11
Carnelian Bay	16
Cisco	16
Clipper Gap	11
Colfax	11
Donner Pass	16

City	CZ
Duncan Canyon	16
Dutch Flat	16
Eder	16
Elders Corner	11
Emigrant Gap	16
Forest Hill Divide	16
Foresthill	16
Gold Run	16
Granite Bay	11
Granite Chief	16
Hidden Valley	11
Homewood	16
Iowa Hill	16
Kings Beach	16
L.L. Anderson Reservoir	16
Lake Tahoe	16
Lincoln	11
Loomis	11
Meadow Vista	11
Michigan Bluff	16
Newcastle	11
North Auburn	11
Penryn	11
Rocklin	11
Roseville	11
Rubicon River	16
Sheridan	11
Squaw Valley (Olympic	16
Tahoe City	16
Tahoe Pines	16
Tahoe Vista	16
Tahoma	16
Troy	16
Weimar	11
Whitney	11
Plumas County (Zone 16)	
Almanor	16
Antelope Lake	16
Bald Eagle Mountain	16
Beckwourth	16
Beckwourth Pass	16
Belden	16
Blairsden	16
Bucks Lake	16
Canyondam	16
Caribou	16
Chester	16
Chilcoot	16
Clio	16
Crescent Mills	16
Cromberg	16
Delleker	16
Diamond Mountains	16
Dixie Mountain	16

City	CZ
Drakesbad	16
East Quincy	16
Frenchman Lake	16
Genesee	16
Greenville	16
Johnsville	16
Keddie	16
Keddie Ridge	16
La Porte	16
Lake Almanor	16
Lake Davis	16
Little Grass Valley	16
Massack	16
Meadow Valley	16
Moccasin	16
Paxton	16
Pilot Peak	16
Portola	16
Quincy	16
Seneca	16
Sierra Valley	16
Sloat	16
Spring Garden	16
Storrie	16
Taylorsville	16
Turntable Creek	16
Twain	16
Vinton	16

Riverside County (Zone 10, 14, 15, 16)

City	CZ
Aguanga	10
Alberhill	10
Anza	16
Arlington	10
Banning	15
Beaumont	10
Big Maria Mountains	15
Blythe	15
Box Canyon	15
Cabazon	15
Cahuilla	16
Calimesa	10
Canyon Lake	10
Cathedral City	15
Cherry Valley	10
Chiriaco Summit	14
Chuckwalla Mountains	14
Chuckwalla Valley	15
Coachella	15
Coachella Valley	15
Corona	10
Deep Canyon	15
Desert Beach	15
Desert Center	15
Desert Hot Springs	15
Durmid	15
Eagle Mountain	14
Eagle Mountains	14
East Hemet	10
Edgemont	10
Elsinore	10
Ford Dry Lake	15
Fried Liver Wash	14
Gillman Hot Springs	10
Glen Avon	10
Hayfield	14
Hayfield Lake	14
Hemet	10
Highgrove	10
Home Gardens	10
Homeland	10
Idyllwild	16
Inca	15
Indian Wells	15
Indio	15
La Quinta	15
Lake Elsinore	10
Lake Mathews	10
Lake Perris	10
Lakeland Village	10
Lakeview	10
March A.F.B.	10
Martinez Canyon	15
McCoy Wash	15
Mecca	15
Mesaville	15
Midland	15
Mira Loma	10
Moreno Valley	10
Mount Center	16
Mount San Jacinto	16
Murrieta	10
Nicholls Warm Springs	15
Nightingale	16
Norco	10
North Palm Springs	15
Nuevo	10
Oasis	15
Palen Lake	15
Palen Mountains	15
Palm Canyon	15
Palm Desert	15
Palm Desert Country	15
Palm Springs	15
Palo Verde Valley	15
Pedley	10
Perris	10
Pinkham Wash	15
Pinto Mountains	14
Pinto Wash	14
Porcupine Wash	14
Prado Flood Control Basin	10
Quail Valley	10
Railroad Canyon Reservoir	10
Rancho Mirage	15
Rice Valley	15
Ripley	15
Riverside	10
Romoland	10
Rubidoux	10
Salton Sea	15
Sage	10
San Gorgonio Pass	15
San Gorgonio River	15
San Jacinto	10
San Jacinto Mountains	15
San Jacinto River	10
San Timoteo Canyon	10
Santa Rosa Mountains	15
Smoke Tree Wash	14
Sun City	10
Sunnymead	10
Temecula	10
Temescal Wash	10
Thermal	15
Thomas Mountain	16
Thousand Palms	15
Valle Vista	10
White Water	15
Wildomar	10
Winchester	10
Woodcrest	10

Sacramento County (Zone 12)

City	CZ
American River	12
Antelope	12
Arden Town	12
Brannan Island	12
Bridge House	12
Carmichael	12
Citrus Heights	12
Clay	12
Cosumnes River	12
Courtland	12
Del Paso Heights	12
Elk Grove	12
Elverta	12
Fair Oaks	12
Florin	12
Folsom	12
Foothill Farms	12
Franklin	12
Freeport	12

City	CZ
Galt	12
Herald	12
Hood	12
Isleton	12
La Riviera	12
Mather Air Force Base	12
McClellan Air Force Base	12
Nimbus	12
North Highlands	12
North Sacramento	12
Orangevale	12
Parkway-South	12
Point Pleasant	12
Rancho Cordova	12
Rio Linda	12
Robla	12
Rosemont	12
Ryde	12
Sacramento AP	12
Sacramento Army Depot	12
Sheldon	12
Sloughhouse	12
Twin Cities	12
Vorden	12
Walnut Grove	12
White Rock	12
Wilton	12
San Benito County (Zone 4)	
Arroyo Dos Picachos	4
Bitterwater	4
Hollister	4
Idria	4
Llanada	4
Paicines	4
Panoche	4
San Benito	4
San Benito Mountain	4
San Benito River	4
San Juan Bautista	4
Tres Pinos	4
San Bernardino County (Zone 10, 14, 15, 16)	
Adelanto	14
Afton	14
Alta Loma	10
Amboy	15
Apple Valley	14
Argus	14
Arrowhead Junction	14
Atolia	14
Avawatz Mountains	14
Bagdad	15
Baker	14

City	CZ
Balch	14
Barstow	14
Bell Mountain	14
Bell Mountain Wash	14
Big Bear City	16
Big Bear Lake	16
Black Canyon Wash	14
Black Meadow Landing	15
Bloomington	10
Brant	14
Bristol Lake	15
Bristol Mountains	14
Bryman	14
Budweiser Wash	14
Bull Spring Wash	14
Bullion Mountains	14
Cadiz	15
Cadiz Lake	15
Cadiz Valley	15
Cady Mountains	14
Cajon Junction	16
Cajon Summit	16
Calada	14
Camino	14
Camp Angelus	16
Cedar Wash	14
Chambless	15
China Lake	14
Chino	10
Chino Hills	10
Chubbuck	15
Cima	14
Clark Mountain	14
Colorado River	15
Colton	10
Cottonwood Wash	14
Coyote Lake	14
Crestline	16
Cross Roads	15
Crucero	14
Cucamonga	10
Cuddeback Lake	14
Daggett	14
Dale Lake	14
Danby	14
Danby Lake	15
Dawes	14
Del Rosa	16
Desert	14
Devils Playground	14
Devils Playground Wash	14
Devore	10
Eagle Crags	14
Earp	15
East Highlands	10

City	CZ
El Mirage	14
El Mirage Lake	14
Emerson Lake	14
Essex	14
Etiwanda	14
Fawnskin	16
Fenner	14
Fenner Valley	14
Flynn	14
Fontana	10
Forest Falls	16
Fossil Canyon	14
Fremont Peak	14
Fremont Wash	14
George A.F.B.	14
Glasgow	14
Goffs	14
Goldstone	14
Goldstone Lake	14
Grand Terrace	10
Granite Mountains	14
Green Valley Lake	16
Grommet	15
Halloran Springs	14
Harper Lake	14
Hart	14
Havasu Lake	15
Hawes	14
Hector	14
Helendale	14
Hesperia	14
Highland	10
Hinkley	14
Hodge	14
Homer	14
Homer Wash	14
Ivanpah	14
Ivanpah Lake	14
Ivanpah Valley	14
Java	15
Joshua Tree	14
Kelso	14
Kelso Wash	14
Kingston Peak	14
Kingston Wash	14
Klondike	14
Kramer Junction	14
Lake Arrowhead	16
Lake Havasu	15
Landers	14
Lane Mountain	14
Lanfair Valley	14
Lavic	14
Lavic Lake	14
Leach Lake	14

City	CZ
Lenwood	14
Lockhart	14
Loma Linda	10
Los Serranos	10
Lucerne Lake	14
Lucerne Valley	14
Ludlow	14
Lytle Creek	16
Manix	14
Mentone	10
Mesquite Lake	14
Midway	14
Milligan	15
Minneola	14
Mitchell Caverns	14
Mojave River	14
Mojave River Forks	14
Montclair	10
Morongo Valley	14
Mount Baldy	16
Mount San Antonio	16
Mountain Pass	14
Muscoy	10
Needles	15
Newberry Springs	14
Nipton	14
Norton AFB	10
Old Dale	14
Ontario	10
Ord Mountain	14
Oro Grande	14
Oro Grande Wash	14
Owlshead Mountains	14
Palm Wells	14
Parker Dam	15
Phelan	14
Pinnacles NM	14
Pinon Hills	14
Pioneer Point	14
Pioneertown	14
Pipes Wash	14
Piute Valley	14
Piute Wash	14
Prado Flood Control Basin	10
Providence Mountains	14
Rancho Cucamonga	10
Red Mountain	14
Redlands	10
Rialto	10
Rice	15
Riggs Wash	14
Running Springs	16
Saltmarsh	15
Saltus	15
San Bernardino	10

City	CZ
San Bernardino Mountains	16
San Gorgonio Mountain	16
Sands	14
Searles Lake	14
Seven Oaks	16
Shadow Valley	14
Sidewinder Mountain	14
Silver Lake	14
Silverwood Lake	16
Slate Range	14
Soda Lake	14
Soda Mountains	14
Spangler	14
Squirrel Inn	14
Superior Lake	14
Teagle Wash	14
Tiefort Mountains	14
Trona	14
Turtle Mountains	14
Twentynine Palms	14
Upland	10
Victorville	14
Vidal	15
Vidal Junction	15
Vidal Valley	15
Vidal Wash	15
Watson Wash	14
Westend	14
Whipple Mountains	15
Whitewater River (North	16
Whitewater River (South	16
Willow Wash	14
Winston Wash	14
Wrightwood	16
Yermo	14
Yucaipa	10
Yucca Valley	14
San Diego County (Zone 7, 10, 14, 15)	
Agua Caliente Springs	15
Alpine	10
Barona	10
Barrett Dam	10
Barrett Junction	10
Bonsall	10
Borrego	15
Borrego Springs	15
Bostonia	10
Boulevard	14
Cabrillo National	7
Camp Pendleton	10
Campo	14
Cardiff-by-the-Sea	7
Carlsbad	7

City	CZ
Casa de Oro, Mount Helix	10
Chula Vista	7
Coronado	7
Cuyamaca	7
Cuyamaca Peak	14
De Luz	10
Del Dios	10
Del Mar	7
Descanso	14
Dos Cabezas	15
Duguynos Canyon	15
Dulzura	10
El Cajon	10
El Capitan Reservoir	14
Encanto	10
Encinitas	7
Escondido	10
Fallbrook	10
Fernbrook	10
Fort MacArthur	7
Grossmont	7
Guatay	14
Harbinson Canyon	10
Henshaw Dam	10
Imperial Beach	7
Jacumba	14
Jacumba Mountains	15
Jamul	10
Julian	14
La Jolla	7
La Mesa	7
Lake Henshaw	14
Lakeside	10
Las Flores	7
Lemon Grove	7
Leucadia	7
Linda Vista	7
Live Oak Springs	14
Loert Otay Reservoir	10
Lower Bear River	16
Margarita Peak	10
Mesa Grande	14
Miramar Naval Air Station	7
Mission Bay	7
Monument Peak	14
Morena VIllage	14
Mount Laguna	14
National City	7
Oak Grove	14
Ocean Beach	7
Oceanside	7
Ocotillo Wells	15
Otay	7
Pacific Beach	7
Pala	10

City	CZ
Palm City	7
Palomar Mountain	14
Pauma Valley	10
Pendleton M.C.B.	7
Pine Valley	14
Point La Jolla	7
Point Loma	7
Potrero	14
Poway Valley	10
Rainbow	10
Ramona	10
Ranchita	14
Rancho Bernardo	10
Rancho San Diego	10
Rancho Santa Fe	7
San Diego	7/10
San Diego Bay	7
San Diego Naval Hospital	7
San Diego Naval Station	7
San Felipe	14
San Luis Rey	7
San Luis Rey River (West	14
San Marcos	10
San Mateo Canyon	10
San Onofre	7
San Onofre Canyon	10
San Pasqual	10
San Vicente Reservoir	10
San Ysidro	7
San Ysidro Mountains	10
Santa Ysabel	14
Santee	10
Solana Beach	7
Spring Valley	10
Suncrest	10
Sweetwater Reservoir	10
Tecate	14
Tierra del Sol	14
Tijuana River	7
U.S. Navy Training Center	7
U.S.M.C. Recruit Depot,	7
U.S.N. Air Station, Imperial	7
U.S.N. Air Station, North	7
U.S.N. Reservation, Point	7
Valley Center	10
Vista	7
Warner Springs	14
Wynola	14
San Francisco County (Zone 1, 3)	
Farallon Island	1
Golden Gate	3
Gulf of the Farallones	3
Presidio of San Francisco	3
San Francisco	3
San Francisco Bay	3
Treasure Island Naval	3
San Joaquin County (Zone 12)	
Acampo	12
Banta	12
Bellota	12
Bethany	12
Calaveras River	12
Carbona	12
Clements	12
Collegeville	12
Collierville	12
Corral Hollow	12
Country Club	12
Escalon	12
Farmington	12
French Camp	12
Garden Acres	12
Henderson Village	12
Holt	12
Lathrop	12
Lincoln Village	12
Linden	12
Lockeford	12
Lodi	12
Manteca	12
Middle River	12
Middle River Town	12
Mokelumne River	12
Morada	12
Mormon Slough	12
Old River	12
Peters	12
Ripon	12
Sharpe Army Depot	12
Stockton	12
Terminous	12
Thornton	12
Tracy Carbona	12
Turner	12
U.S.N. Communication	12
Vernalis	12
Victor	12
Waterloo	12
Woodbridge	12
San Luis Obispo County (Zone 4, 5)	
Adelaida	4
Arroyo Grande	5
Atascadero	4
Avila Beach	5
Baywood Park	5
Caliente Range	4
California Valley	4
Cambria	5
Carrizo Plain	4
Cayucos	5
Cerro Alto	4
Cholame	4
Creston	4
Cuesta Pass	4
Cuyama Valley	4
Edna	5
El Paso de Robles	4
Estero Bay	5
Estrella	4
Estrella River	4
Grover Beach	5
Grover City	5
Harmony	5
Hog Canyon	4
Huasna	5
Huasna River	5
Irish Hills	5
La Panza Range	4
Lopez Lake	5
Los Berros Canyon	5
Los Osos	5
McMillan Canyon	4
Morales Canyon	4
Morro Bay	5
Nacimiento Reservoir	4
Nacimiento River	4
Nipomo	5
Oceano	5
Paso Robles AP	4
Pine Canyon	4
Pine Mountain	4
Pismo Beach	5
Point Buchon	5
Point Piedras Blancas	5
Pozo	4
San Luis Obispo	5
San Luis Obispo Bay	5
San Miguel	4
San Simeon	5
Santa Margarita	4
Santa Margarita Lake	4
Santa Maria River	5
Shandon	4
Shedd Canyon	4
Simmler	4
Soda Lake	4
Taylor Canyon	4
Templeton	4
Tucker Canyon	4
Whale Rock Reservoir	5
Whitley Gardens	4

City	CZ
San Mateo County (Zone 3)	
Atherton	3
Belmont	3
Brisbane	3
Burlingame	3
Colma	3
Crystal Springs Reservoir	3
Daly City	3
East Palo Alto	3
El Granada	3
Foster City	3
Half Moon Bay	3
Hillsborough	3
La Honda	3
Loma Mar	3
Menlo Park	3
Millbrae	3
Miramar	3
Montara	3
Moss Beach	3
Pacifica	3
Pescadero	3
Pigeon Point	3
Pillar Point	3
Portola Valley	3
Redwood City	3
San Andreas Lake	3
San Bruno	3
San Carlos	3
San Gregorio	3
San Mateo	3
South San Francisco	3
U.S.N. Facility, San Bruno	3
Woodside	3
Santa Barbara County (Zone 4, 5,6)	
Agua Caliente Canyon	5
Betteravia	5
Buellton	5
Cachuma Lake	5
Capitan	6
Carpinteria	6
Casmalia	5
Concepcion	6
Cuyama	4
Cuyama Valley	4
Drake	6
Foxen Canyon	5
Garey	5
Gaviota	6
Gaviota Pass	6
Goleta	6
Guadalupe	5
Honda	5
Isla Vista	6

City	CZ
Jalama	5
Lake Cachuma	5
Las Cruces	5
Lompoc	5
Los Alamos	5
Los Olivos	5
Montecito	6
Naples	6
New Cuyama	4
Orcutt	5
Pine Canyon	5
Point Arguello	5
Point Conception	6
Point Sal	5
Purisma Hills	5
San Miguel Island	6
San Rafael Mountain	5
Santa Barbara	6
Santa Barbara Island	6
Santa Cruz Island	6
Santa Maria	5
Santa Maria River	5
Santa Maria Valley	5
Santa Rosa Islands	6
Santa Ynez	5
Santa Ynez Mountains	5
Santa Ynez River	5
Sisquoc	5
Sisquoc River	5
Solvang	5
Summerland	6
Surf	5
Tajiguas	6
Tepusquet Canyon	5
Tequspuet Peak	5
Twitchell Reservoir	5
Vandenberg Air Force	5
Vandenburg Village	5
Ventupopa	4
Santa Clara County (Zone 4)	
Almaden A.F.S.	4
Alviso	4
Anderson Lake	4
Arroyo Hondo	4
Bell Station	4
Berryessa	4
Calaveras Reservoir	12/4
Campbell	4
Coyote	4
Cupertino	4
Diablo Range	4
Gilroy	4
Loma Prieta	4
Los Altos	4

City	CZ
Los Altos Hills	4
Los Gatos	4
Milpitas	4
Moffett Field Naval Air	4
Monta Vista	4
Monte Sereno	4
Morgan Hill	4
Mount Hamilton	4
Mount Hermon	3
Mountain View	4
New Almaden	4
Pacheco Pass	4
Palo Alto	4
Redwood Estates	4
San Felipe	4
San Jose	4
San Martin	4
Santa Clara	4
Santa Clara Valley	4
Saratoga	4
Sargent	4
Stanford	4
Sunnyvale	4
Sunnyvale Air Force	4
Svedal	4
U.S.N. Facility, Sunnyvale	4
Santa Cruz County (Zone 3)	
Aptos	3
Ben Lomond	3
Big Basin	3
Bonny Doon	3
Boulder Creek	3
Brookdale	3
Capitola	3
Corralitos	3
Davenport	3
Felton	3
Freedom	3
La Selva Beach	3
Live Oak	3
Monterey Bay	3
Opal Cliffs	3
Rio Del Mar	3
San Lorenzo River	3
Santa Cruz	3
Santa Cruz Mountains	3
Scotts Valley	3
Soquel	3
Swanton	3
Twin Lakes	3
Watsonville	3
Shasta County (Zone 11, 16)	
Anderson	11

City	CZ
Beegum	11
Bella Vista	11
Big Bend	16
Big Lake	16
Bollibokka Mountain	16
Buckeye	11
Burney	16
Burney Mountain	16
Cassel	16
Castella	16
Cayton	16
Centerville	11
Central Valley	11
Cloverdale	11
Cottonwood	11
Dana	16
Delta	16
Enterprise	11
Fall River	16
Fall River Mills	16
Fern	11
French Gulch	11
Gas Point	11
Girvan	11
Glenburg	16
Hat Creek	16
Igo	11
Ingot	11
Inwood	11
Iron Mountain	11
Keswick	11
Knob	16
Lake Britton	16
Lakehead	16
Lamoine	16
Lassen Peak	16
Manzanita Lake	16
Matheson	11
McArthur	16
McCloud River	16
Millville	11
Montgomery Creek	16
Mountain Gate	11
Oak Run	11
Obie	16
O'Brien	16
Old Station	16
Olinda	11
Ono	11
Palo Cedro	11
Pittville	16
Platina	11
Project City	11
Redding	11
Round Mountain	16

City	CZ
Shasta	11
Shasta Bally	11
Shasta Lake	16
Shingletown	16
Summit City	11
Trinity Mountains	16
Turntable Creek	11
Viola	16
Whiskeytown	11
Whiskeytown Lake	11
Sierra County (Zone 16)	
Alleghany	16
Calpine	16
Downie River	16
Downieville	16
Forest	16
Gibsonville	16
Goodyears Bar	16
Jackson Meadows	16
Little Truckee River	16
Loyalton	16
Purdy	16
Sardine Peak	16
Sattley	16
Sierra Buttes	16
Sierra City	16
Sierra Valley	16
Sierraville	16
Stampede Reservoir	16
Siskiyou County (Zone 16)	
Ager	16
Bartle	16
Beswick	16
Big Springs	16
Black Bear	16
Bolam	16
Bray	16
Butte Valley	16
Callahan	16
Cascade Range	16
Cecilville	16
Condrey Mountain	16
Copco	16
Cottage Grove	16
Cougar	16
Curtis	16
Deetz	16
Dorris	16
Dunsmuir	16
Dwinnell Reservoir	16
Edgewood	16
Erickson	16
Etna	16

City	CZ
Forks of Salmon	16
Fort Goff	16
Fort Jones	16
Gazelle	16
Goosenest	16
Grass Lake	16
Greenview	16
Grenada	16
Hambone	16
Hamburg	16
Happy Camp	16
Hawkinsville	16
Hilt	16
Hornbrook	16
Horse Creek	16
Hotlum	16
Jerome	16
Kinyon	16
Klamath Mountains	16
Klamath River	16
Klamathon	16
Lake Mountain	16
Little Shasta	16
Little Shasta River	16
Lower Klamath Lake	16
Macdoel	16
May	16
McCloud	16
Meiss Lake	16
Montague	16
Mount Eddy	16
Mount Hebron	16
Mount Hoffman	16
Mount Shasta	16
Mugginsville	16
Oro Fino	16
Pierce	16
Pondosa	16
Preston Peak	16
Russian Peak	16
Salmon Mountain	16
Salmon River	16
Salmon River (East Fork)	16
Salmon River (North Fork)	16
Salmon River (South Fork)	16
Sawyers Bar	16
Scott Bar	16
Scott Bar Mountains	16
Scott River	16
Scott River (East Fork)	16
Seiad Valley	16
Shasta River	16
Shasta Springs	16
Shasta Valley	16
Sheep Mountain	16

City	CZ
Siskiyou Mountains	16
Snowden	16
Somes Bar	16
Tecnor	16
Tennant	16
Tule Lake Sump	16
Tulelake	16
Weed	16
Wyntoon	16
Yreka	16
Solano County (Zones 3, 12)	
Allendale	12
Benicia	12
Birds Landing	12
Collinsville	12
Cordelia	12
Deep Water Ship Channel	12
Denverton	12
Dixon	12
Dozler	12
Elmira	12
Fairfield	12
Gillespie Field	12
Grizzly Bay	12
Honker Bay	12
Liberty Farms	12
Libfarm	12
Mare Island Naval Facility	3
Montezuma	12
Montezuma Slough	12
Monticello Dam	2
Oxford	12
Putah South Canal	12
Rio Vista	12
Rockville	12
Suisun Bay	12
Suisun City	12
Travis A. F.B.	12
Tremont	12
U.S.N. Facility, Vallejo	3
Vacaville	12
Vallejo	3
Yolo Bypass	12
Sonoma County (Zones 1, 2)	
Annapolis	1
Asti	2
Big Bend	2
Big Mountains	2
Bloomfield	2
Bodega	1
Bodega Bay	1
Bodega Head	1
Boyes Hot Springs	2

City	CZ
Camp Meeker	2
Cazadero	1
Cloverdale	2
Cotati	2
Cunningham	2
Duncans Mills	1
El Verano	2
Fairville	2
Forestville	2
Fort Ross	1
Freestone	2
Fulton	2
Geyserville	2
Glen Ellen	2
Graton	2
Guerneville	2
Hacienda	2
Healdsburg	2
Jenner	1
Jimtown	2
Kenwood	2
Lakeville	2
Larksfield-Wikiup	2
Lucas Vly-Marinwood	2
Lytton	2
Monte Rio	2
Mount Saint Helena	2
Occidental	2
Ocean View	1
Penngrove	2
Petaluma	2
Petaluma River	2
Plantation	1
Rio Nido	2
Rohnert Park	2
Roseland	2
Santa Rosa	2
Schellville	2
Sebastopol	2
Skaggs Springs	2
Soda Springs	1
Sonoma	2
Sonoma Mountain	2
Stewarts Point	1
Two Rock	2
Valley Ford	2
Windsor	2
Stanislaus County (Zone 12)	
Ceres	12
Chemurgic	12
Crows Landing	12
Denair	12
Empire	12
Eugene	12

City	CZ
Grayson	12
Hickman	12
Hills Ferry	12
Hughson	12
Keyes	12
Knights Ferry	12
La Grange	12
Modesto	12
Modesto Reservoir	12
Montpelier	12
Newman	12
Oakdale	12
Orestimba Peak	12
Patterson	12
Paulsell	12
Riverbank	12
Riverbank Army Depot	12
Salida	12
South Turlock	12
Turlock	12
Turlock Lake	12
Valley Home	12
Warnersville	12
Waterford	12
West Modesto	12
Westley	12
Sutter County (Zone 11)	
Auburn Ravine	11
Bear River	11
Catlett	11
Cranmore	11
East Nicolaus	11
Feather River	11
Josephine	11
Kirkville	11
Kirkwood	11
Live Oak	11
Lomo	11
Meridian	11
Morrison Slough	11
Nicolaus	15
Pennington	11
Pleasant Hill	11
Rio Oso	11
Robbins	11
Snake River	11
South Yuba City	11
Sutter	11
Sutter Buttes	11
Sutter Bypass	11
Trowbridge	11
Tudor	11
Verona	11
Yuba City	11

City	CZ
Tehama County (Zone 11, 16)	
Barkley Mountain	16
Bend	11
Black Butte Reservoir	11
Blossom	11
Blunt	11
Corning	11
Corning Canal	11
Dairyville	11
Dales	11
Flournoy	11
Gerber	11
Henleyville	11
Hooker	11
Inskip Hill	11
Los Molinoss	11
Lowrey	11
Lyonsville	16
Manton	16
Mill Creek	16
Mineral	16
North Yolla Bolly	16
Paskenta	11
Paynes Creek	11
Proberta	11
Red Bank	11
Red Bluff	11
Richfield	11
Rosewood	11
Saint Bernard	16
South Yolla Bolly	16
Tehama	11
Vina	11
Trinity County (Zone 2, 16)	
Big Bar	16
Bonanza King	16
Burnt Ranch	16
Carrville	16
Chanchelulla Peak	16
China Peak	16
Clair Engle Lake	16
Covington Mill	16
Deadwood	16
Dedrick	16
Del Loma	16
Denny	16
Douglas City	16
Forest Glen	16
Gibson Peak	16
Hayfork	16
Hayfork Bally	16
Helena	16
Hyampom	16
Island Mountain	2
Junction City	16
Kekawaka	2
Kettenpom	2
Lewiston	16
Lewiston Lake	16
Mount Eddy	16
New River	16
Peanut	16
Ruth	16
Salyer	16
Scott Mountains	16
Trinity Alps	16
Trinity Center	16
Trinity Dam	16
Trinity Mountains	16
Trinity River (East Fork)	16
Weaverville	16
Zenia	2
Tulare County (Zone 13, 16)	
Allensworth	13
Alpaugh	13
Angiola	13
Ash Mountain	13
Badger	13
California Hot Springs	16
Camp Nelson	16
Cutler	13
Dinuba	13
Ducor	13
Earlimart	13
East Porterville	13
Elderwood	13
Elk Bayou	13
Exeter	13
Fairview	16
Farmersville	13
Florence Peak	16
Fountain Springs	13
Fountain Springs Gulch	13
Giant Forest	16
Goshen	13
Grant Grove	16
Greenhorn Mountains	16
Ivanhoe	13
Johnsondale	16
Kaweah	13
Kaweah River (Middle	16
Lake Kaweah	13
Lake Success	13
Lemoncove	13
Lindcove	13
Lindsay	13
Little Kern River	16
Milo	13
Mineral King	16
Monson	13
Mount Whitney	16
New London	13
Olancha Peak	16
Orosi	13
Pine Flat	16
Pixley	13
Plainview	13
Poplar	13
Porterville	13
Posey	13
Quedow Mountain	13
Richgrove	13
Saint Johns River	13
Sherman Peak	16
Silver City	16
Springville	13
Strathmore	13
Sultana	13
Tagus	13
Terminus Dam	13
Terra Bella	13
Three Rivers	13
Tipton	13
Tobias Peak	16
Traver	13
Tulare	13
Visalia	13
Waukena	13
White River (Town)	13
Wilsonia	16
Woodlake	13
Woodville	13
Yettem	13
Yucca Mountain	16
Tuolumne County (Zone 12, 16)	
Aspen Valley	16
Beardsley Lake	16
Big Oak Flat	12
Cherry Lake	16
Chinese Camp	12
Clavey River	16
Cold Springs	16
Columbia	12
Dardanelle	16
Groveland	12
Harden Flat	16
Hetch Hetchy Junction	12
Hetch Hetchy Reservoir	16
Jacksonville	12
Jamestown	12
Lake Eleanor	16

City	CZ
Leavitt Peak	16
Long Barn	16
Mather	16
Matterhorn Peak	16
Melones Reservoir	12
Middle Tuolumne River	16
Mi-Wuk Village	12
Moccasin	12
New Don Pedro Reservoir	12
Pilot Peak	16
Pinecrest	16
Sonora	12
Sonora Pass	16
Soulsbyville	12
South Entry Yosemite	16
Standard	12
Stanislaus River (Middle	16
Stent	12
Strawberry	16
Tioga Pass	16
Tuolumne	12
Tuolumne Meadows	16
Tuolumne River (North	16
Tuolumne River (South	16
Tuttletown	12
Twain Harte	12
White Wolf	16
Ventura County (Zones 6, 9, 16)	
Anacapa Island	6
Apache Canyon	16
Bardsdale	9
Camarillo	6
Casitas Springs	9
Cuddy Canyon	16
Dry Canyon	16
El Rio	6
Fillmore	9
Frazier Mountain	16
Hollywood-by-the-Sea	6
Lake Casitas	9
Meiners Oaks	9
Montalvo	6
Moorpark	9
Mount Pinos	16
Newbury Park	9
Oak Ridge	9
Oak View	9
Ojai	9
Oxnard	6
Oxnard Beach	6
Pine Mountain	16
Piru	9
Point Mugu	6
Point Mugu Naval Missile	6

City	CZ
Port Hueneme	6
Quatal Canyon	16
San Buenaventura	6
San Nicholas Island	6
Santa Clara River	6/9
Santa Paula	9
Santa Susana	9
Saticoy	6
Sea Cliff	6
Sespe	9
Simi Valley	9
Solromar	6
Somis	6
Sulphur Springs	9
Thousand Oaks	9
U.S.N. Construction	6
U.S.N. Facility, San Nicolas	6
Ventura	6
Wheeler Springs	16
Yolo County (Zone 2, 3, 12)	
Berryessa Peak	2/12
Broderick	12
Brooks Ranch	12
Bryte	12
Capay	12
Clarksburg	12
Colusa Basin Drainage	12
Davis	12
Deep Water Ship Channel	12
Dunnigan	12
Esparto	12
Guinda	12
Knights Landing	12
Madison	12
Rumsey	12
Tule Canal	12
West Sacramento	12
Winters	12
Woodland	12
Yolo	12
Yolo Bypass	12
Zamora	12
Yuba County (Zone 11, 16)	
Beale Air Force Base	11
Bear River	11
Browns Valley	11
Brownsville	11
Camp Far West Reservoir	11
Camptonville	16
Challenge	16
Dobbins	11
Hammonton	11
Linda	11

City	CZ
Loma Rica	11
Marysville	11
Merle Collins Reservoir	11
Middle Yuba River	16
New Bullards Bar	16
North Yuba River	16
Olivehurst	11
Oregon House	11
Oregon Peak	16
Racherby	11
Smartville	11
Strawberry Valley	16
Tambo	11
Wheatland	11
Woodleaf	16

II.3 California Design Location Data

The data contained in the following table was obtained through a joint effort by the Southern California Chapter and the Golden Gate Chapter of ASHRAE. It is reprinted here with the written permission of Southern California Chapter ASHRAE, Inc. The values for 1.0% drybulb and 1.0% mean coincident wetbulb (MCWB) are interpolated.[2] These values are intended to be used with the

The data in Table II.3 is developed from A full listing of design location data for California is contained in the ASHRAE publication *SPCDX, Climate Data for Region X, Arizona, California, Hawaii, and Nevada* (ISBN 200021, May 1982) and *Supplement to Climatic Data for Region X, Arizona, California, Hawaii, Nevada* (ISBN 20002956, November 1994). The publication may be ordered from:

Order Desk
Building News
10801 National Blvd.
Los Angeles, CA 90064
(888) 264-7483 or (310) 474-7771
http://www.bnibooks.com

[2] The interpolation formula is 2.0%value + 0.6667 (0.5%Value – 2.0% value + 0.5).

Table II.3 – Design Day Data for California Cities

						Cooling											Heating			
						0.1%		0.5%		1.0%		2.0%								
County	City	Climate Zone	Latitude	Elevation (ft)	Longitude	DB	MCWB	DB	MCWB	DB	MCWB	DB	MCWB	Design Wetbulb 0.1%	Design Wetbulb 0.5%	Outdoor Daily Range	Winter Median of Extremes	Design Drybulb (0.2%)	Design Drybulb (0.6%)	HDD*
Alameda	Alameda NAS	3	37.8	15	122.3	88	65	82	64	80	64	76	62	73	34	21	35	31	34	2507
Alameda	Albany	3	37.9	40	122.3	88	65	83	64	81	64	77	62	66	64	16	30	35	38	
Alameda	Ashland	3	37.7	45	122.1	92	66	86	65	85	64	81	62	68	66	24	26	31	34	
Alameda	Berkeley	3	37.9	345	122.3	90	64	83	63	81	63	76	61	70	68	16	33	33	36	2950
Alameda	Castro Valley	3	37.6	177	122.2	93	67	87	67	85	67	80	65	69	68	25	24	29	32	
Alameda	Cherryland	3	37.5	100		93	67	86	66	84	66	79	64	72	70	24	26	31	34	
Alameda	Dublin	12	37.7	200	121.5	99	69	93	67	91	67	86	65	70	68	35	24	29	32	
Alameda	Fremont	3	37.5	56	122.0	94	67	88	65	86	65	81	63	69	67	24	25	30	33	
Alameda	Hayward	3	37.7	530	122.1	92	66	86	65	85	64	81	62	77	75	24	26	29	32	2909
Alameda	Livermore	12	37.7	490	122.0	100	69	95	68	93	68	88	67	73	71	35	22	29	32	3012
Alameda	Newark	3	37.5	10	122.0	94	68	89	67	87	67	82	65	68	66	24	29	21	25	
Alameda	Oakland AP	3	37.7	6	122.2	91	66	84	64	82	64	77	62	73	71	20	32	28	32	2909
Alameda	Oakland Museum	3	37.8	30	122.2	96	68	89	66	87	65	82	63	67	65	20	31	34	37	
Alameda	Piedmont	3	37.8	325	122.0	96	68	89	66	87	65	82	63	70	68	23	31	33	36	
Alameda	Pleasanton	12	37.6	350	121.8	97	68	94	67	93	67	89	65	70	68	35	24	29	32	
Alameda	San Leandro	3	37.7	45	122.2	89	67	83	64	81	64	76	62	66	64	22	28	25	28	
Alameda	San Lorenzo	3	37.7	45	122.1	89	67	83	64	81	64	76	62	66	64	23	28	25	28	
Alameda	Union City	3	37.6	5	122.1	90	67	87	66	85	65	81	63	69	67	20	25	30	33	
Alameda	Upper San Leandro	3	37.8	394		93	67	87	66	85	65	80	63	70	68	22	28	24	27	
Alpine	Woodfords	16	38.8	5671	119.8	92	59	89	58	88	58	84	56	74	72	32	0	32	35	6047
Amador	Electra PH	12	38.3	715	120.7	106	70	102	69	101	69	98	68	73	71	41	23	38	41	2858
Amador	Ione	12	38.3	298	120.9	101	70	97	68	95	68	91	67	75	71	38	23	22	26	
Amador	Tiger Creek PH	12	38.5	2355	120.5	100	66	96	65	95	65	92	63	67	65	36	20	34	36	3795
Amador/Calaveras	Salt Springs PH	16	38.5	3700	120.2	95	62	92	61	91	61	87	59	69	66	27	19	33	35	3857
Butte	Centerville PH	11	39.8	522	121.7	105	70	100	68	99	68	96	67	65	63	40	25	6	13	2895
Butte	Chico Exp Sta	11	39.7	205	121.8	105	70	102	69	100	69	96	68	72	70	37	22	31	34	2878

						Cooling											Heating			
						0.1%		0.5%		1.0%		2.0%								
County	City	Climate Zone	Latitude	Elevation (ft)	Longitude	DB	MCWB	DB	MCWB	DB	MCWB	DB	MCWB	Design Wetbulb 0.1%	Design Wetbulb 0.5%	Outdoor Daily Range	Winter Median of Extremes	Design Drybulb (0.2%)	Design Drybulb (0.6%)	HDD*
Butte	De Sabla	11	39.9	2713	121.6	97	66	94	64	92	64	88	62	74	71	35	18	30	34	4237
Butte	Las Plumas	11	39.7	506		104	71	101	70	100	70	96	68	73	71	32	24	29	32	
Butte	Oroville East	11	39.5	171		106	71	104	70	102	70	98	69	74	72	37	25	30	33	
Butte	Oroville RS	11	39.5	300	121.6	106	71	104	70	102	70	98	69	74	72	37	25	30	33	
Butte	Palermo	11	39.4	154	121.5	106	71	104	70	102	70	98	69	74	72	37	25	30	33	
Butte	Paradise	11	39.8	1750	121.6	102	69	99	67	98	67	94	66	74	71	34	25	33	36	
Butte	South Oroville	11	39.5	174	121.6	106	71	104	70	102	70	98	69	74	72	37	25	30	33	
Butte	Thermalito	11	37.9	25	121.6	106	71	104	70	102	70	98	69	74	72	37	25	30	33	
Calaveras	Camp Pardee	12	38.2	658	120.9	106	71	103	70	102	70	98	69	70	68	36	27	26	29	2812
Colusa	Colusa	11	39.2	60	122.0	103	72	100	70	98	70	94	68	74	72	36	23	33	35	2793
Colusa	East Park Res	11	39.4	1205	122.5	101	69	97	68	96	68	92	66	68	66	38	19	31	34	3455
Colusa	Williams	11	39.2	85	122.2	104	71	100	70	98	70	94	68	68	66	36	24	20	24	
Colusa	Willows	11	39.5	140		104	71	100	70	98	70	94	68	71	69	36	22	28	31	2836
Contra Costa	Alamo	12	37.9	410	122.9	102	69	97	68	96	68	92	66	72	70	30	23	28	31	
Contra Costa	Antioch	12	38.0	60	121.8	102	70	97	68	95	68	91	66	69	66	34	22	30	33	2627
Contra Costa	Blackhawk	12	37.7	10		88	65	82	64	80	64	76	62	66	64	21	35	38	40	
Contra Costa	Brentwood	12	37.9	71	121.7	102	70	97	68	95	67	89	65	71	68	34	27	32	35	
Contra Costa	Clayton	12	38.0	60	121.9	102	70	97	68	95	67	89	65	71	68	34	27	32	35	
Contra Costa	Concord	12	38.0	195	112.0	102	70	97	68	95	67	89	65	74	72	34	27	33	35	3035
Contra Costa	Crockett	12	38.0	9	122.2	96	68	90	66	89	66	85	64	66	64	23	28	20	24	
Contra Costa	Danville	12	37.8	368	122.0	102	69	97	68	96	68	92	66	72	70	30	23	28	31	
Contra Costa	Discovery Bay	12	38.1	10	121.6	102	70	97	68	95	67	89	65	71	68	34	27	32	35	
Contra Costa	El Cerrito	3	37.8	70	122.3	91	66	84	64	81	64	75	62	68	65	17	30	35	38	
Contra Costa	El Sobrante	3	37.9	55	122.3	91	66	87	65	86	65	82	64	69	67	25	30	35	38	
Contra Costa	Hercules	3	38.0	15	122.3	91	66	87	65	86	65	82	64	69	67	25	30	35	38	
Contra Costa	Lafayette	12	37.9	535	122.1	100	69	94	67	92	67	87	66	71	69	32	24	29	32	
Contra Costa	Martinez FS	12	38.0	40	122.1	99	67	94	66	92	66	88	65	72	70	36	28	29	31	
Contra Costa	Moraga	12	37.8	600	122.2	99	68	93	66	91	66	86	64	70	68	27	21	26	29	
Contra Costa	Mount Diablo	12	37.9	2100	121.9	101	68	96	66	93	66	87	65	61	59	28	27	10	14	4600

						Cooling											Heating			
						0.1%		0.5%		1.0%		2.0%								
County	City	Climate Zone	Latitude	Elevation (ft)	Longitude	DB	MCWB	DB	MCWB	DB	MCWB	DB	MCWB	Design Wetbulb 0.1%	Design Wetbulb 0.5%	Outdoor Daily Range	Winter Median of Extremes	Design Drybulb (0.2%)	Design Drybulb (0.6%)	HDD*
Contra Costa	Oakley	12	38.0	20	121.7	102	70	97	68	95	68	91	66	70	69	34	22	28	31	
Contra Costa	Orinda	12	37.9	550	122.2	99	68	93	66	91	66	86	64	70	68	32	21	26	29	
Contra Costa	Pinole	3	38.0	10	122.3	91	66	87	65	86	65	82	64	69	67	25	30	35	38	
Contra Costa	Pittsburg	12	38.0	50	121.8	102	70	97	68	95	68	90	67	72	70	34	26	32	35	
Contra Costa	Pleasant Hill	12	37.9	102	122.0	96	68	93	67	92	67	88	65	70	68	34	25	30	33	
Contra Costa	Port Chicago ND	12	38.0	50	122.0	98	69	94	68	92	68	88	66	74	72	34	28	32	35	
Contra Costa	Richmond	3	37.9	55	121.6	88	65	84	64	82	64	77	62	74	72	17	31	33	35	2684
Contra Costa	Rodeo	3	38.1	15	122.3	93	67	90	66	88	66	84	64	70	68	23	28	33	36	
Contra Costa	Saint Mary's College	12	37.8	623	122.1	98	69	93	68	91	68	86	66	73	71	28	21	35	37	3543
Contra Costa	San Pablo	3	37.6	30	122.3	90	65	84	63	82	63	77	61	72	70	17	29	31	34	
Contra Costa	San Ramon	12	37.7	360	122.0	99	69	93	67	91	67	86	65	70	68	35	24	29	32	
Contra Costa	Walnut Creek	12	37.9	245	122.1	100	69	94	67	92	67	87	66	74	72	32	23	33	35	
Contra Costa	West Pittsburg	12	38.0	12	121.9	102	70	97	68	95	68	90	67	72	70	34	26	32	35	
Del Norte	Crescent City	1	41.8	40	124.2	75	61	69	59	68	59	65	58	72	70	18	28	28	31	4445
Del Norte	Elk Valley	16	42.0	1705	123.7	96	65	90	63	88	63	84	61	73	71	39	16	34	36	5404
Del Norte	Idlewild	1	41.9	1250	124.0	103	68	96	66	95	66	92	65	72	71	40	18	30	32	
Del Norte	Klamath	1	41.5	25	124.1	79	62	71	60	70	60	66	58	75	73	18	26	30	34	4509
El Dorado	Cameron Park	12	38.6	1800	121.0	101	67	98	66	97	66	93	65	70	68	42	20	26	29	
El Dorado	El Dorado Hills	12	38.6	673		103	70	100	69	98	69	94	67	72	71	36	24	30	34	
El Dorado	Georgetown RS	12	38.9	3001	120.8	98	64	95	63	94	63	90	61	70	68	31	18	23	26	
El Dorado	Placerville	12	38.7	1890	120.8	101	67	98	66	97	66	93	65	73	71	42	20	34	37	4086
El Dorado	Placerville IFG	12	38.7	2755	120.8	100	66	97	65	96	65	92	64	70	68	42	23	26	29	
El Dorado	South Lake Tahoe	16	38.9	6200	120.0	85	56	82	55	79	55	71	54	60	58	33	-2	3	10	
Fresno	Auberry	13	37.1	2140	119.5	102	69	98	67	97	66	95	64	74	72	36	21	30	34	3313
Fresno	Bonadella Ranchos – Madera Rancho	13	36.8	270		105	72	101	70	100	70	96	68	0	0	40		0	0	
Fresno	Calwa	13	36.8	330	119.8	105	73	101	71	100	70	97	68	75	73	34	23	27	29	
Fresno	Clovis	13	36.8	404	119.7	105	72	102	70	101	70	98	68	71	68	36	22	32	35	
Fresno	Coalinga	13	36.2	671	120.4	103	70	98	70	97	70	93	69	74	72	34	23	33	35	2592
Fresno	Five Points	13	36.4	285	120.2	103	71	99	70	97	70	93	68	73	71	36	21	32	35	

						Cooling											Heating			
						0.1%		0.5%		1.0%		2.0%								
County	City	Climate Zone	Latitude	Elevation (ft)	Longitude	DB	MCWB	DB	MCWB	DB	MCWB	DB	MCWB	Design Wetbulb 0.1%	Design Wetbulb 0.5%	Outdoor Daily Range	Winter Median of Extremes	Design Drybulb (0.2%)	Design Drybulb (0.6%)	HDD*
Fresno	Fresno AP	13	36.8	328	119.7	104	73	101	71	100	70	97	68	69	67	34	24	30	33	2650
Fresno	Friant Gov Camp	13	37.0	410	119.7	106	72	103	70	102	70	100	68	75	73	40	23	28	30	2768
Fresno	Huntington Lake	16	37.2	7020	119.2	80	55	77	54	76	53	73	51	71	69	25	3	38	41	7632
Fresno	Kerman	13	36.6	216	120.1	105	73	101	71	100	70	97	68	75	73	34	24	28	30	
Fresno	Kingsburg	13	36.4	297	119.6	104	73	101	71	100	71	97	69	75	73	36	24	30	34	
Fresno	Lakeshore	16	40.9	1075	119.2	104	69	100	68	99	68	95	66	71	69	28	29	34	36	
Fresno	Little Panoche	13	36.8	677		100	68	94	67	92	67	86	66	74	72	33	23	29	32	
Fresno	Mendota	13	36.7	169	120.4	105	73	101	71	100	70	97	68	75	73	34	24	28	30	
Fresno	Miramonte	13	34.4	750	119.1	102	71	97	69	95	69	91	68	73	71	38	25	29	32	
Fresno	Orange Cove	13	36.6	431	119.3	104	71	100	69	99	69	97	68	72	70	38	25	37	40	2684
Fresno	Parlier	13	36.6	320	119.5	104	73	101	71	100	70	97	68	75	73	38	24	30	34	
Fresno	Reedley	13	36.6	344	119.7	104	71	101	70	100	70	96	68	74	72	40	24	30	34	
Fresno	Sanger	13	36.7	364	119.6	105	72	101	70	100	70	96	68	70	68	37	24	29	32	
Fresno	Selma	13	36.6	305	119.6	104	73	101	71	100	70	97	68	75	73	38	24	30	34	
Glenn	Orland	11	39.8	254	122.2	105	71	102	70	101	70	97	68	70	68	36	22	26	29	2824
Glenn	Stony Gorge Res	11	39.6	791	122.5	104	70	99	69	97	69	93	67	72	70	37	21	28	30	3149
Humboldt	Alderpoint	2	40.2	460	123.6	100	69	95	67	94	67	90	65	66	64	39	21	35	38	3424
Humboldt	Arcata	1	41.0	218	124.1	75	61	69	59	68	59	65	58	73	71	11	28	36	38	5029
Humboldt	Butler Valley (Korbel)	1	40.7	420	123.9	91	66	86	64	85	64	81	62	67	65	22	20	5	12	
Humboldt	Eureka	1	40.8	43	124.2	75	61	69	59	68	59	65	58	72	70	11	30	31	34	4679
Humboldt	Ferndale	1	40.5	1445	124.3	76	57	66	56	65	56	62	54	69	67	12	28	32	35	
Humboldt	Fortuna	1	40.6	100	124.2	75	61	69	59	68	59	65	58	61	60	11	30	35	38	
Humboldt	Hoopa	2	41.0	360	123.7	100	67	92	66	91	66	87	64	70	68	25	23	33	35	
Humboldt	McKinleyville	1	40.9	33	124.1	75	61	69	59	68	59	65	58	61	60	11	28	31	33	
Humboldt	Orick Prairie Creek	1	41.4	161	124.0	80	61	75	60	74	60	70	59	74	71	23	25	30	34	4816
Humboldt	Orleans	2	41.3	403	123.5	104	70	97	68	95	68	91	66	73	71	42	21	28	31	3628
Humboldt	Scotia	1	40.5	139	124.4	78	61	74	60	73	60	69	58	68	66	19	28	21	25	3954
Humboldt	Shelter Cove	1	40.0	110	124.1	80	61	73	60	72	59	68	57	72	70	15	34	34	36	
Humboldt	Willow Creek	2	41.0	461	123.0	104	70	98	68	96	68	92	66	72	70	35	22	39	42	

						Cooling											Heating			
						0.1%		0.5%		1.0%		2.0%								
County	City	Climate Zone	Latitude	Elevation (ft)	Longitude	DB	MCWB	DB	MCWB	DB	MCWB	DB	MCWB	Design Wetbulb 0.1%	Design Wetbulb 0.5%	Outdoor Daily Range	Winter Median of Extremes	Design Drybulb (0.2%)	Design Drybulb (0.6%)	HDD*
Humbolt	Richardson Grove	2	40.0	500	123.8	96	67	92	66	91	66	87	64	74	72	28	25	33	35	
Imperial	Brawley 2 SW	15	33.0	-100	115.6	113	74	110	73	109	73	105	73	72	70	32	25	28	31	1204
Imperial	Calexico	15	32.7	12	115.5	114	74	110	73	109	73	106	71	81	79	28	26	31	34	
Imperial	El Centro	15	32.8	-30	115.6	115	74	111	73	110	73	107	73	74	72	34	26	34	36	1212
Imperial	Gold Rock Rch	15	32.9	485		113	73	110	72	109	72	106	70	70	68	28	31	18	23	
Imperial	Imperial AP	15	32.8	-59	115.6	114	74	110	73	109	73	106	72	67	65	31	26	16	21	1060
Imperial	Imperial CO	15	32.9	-64		112	73	108	72	107	72	104	71	71	69	31	29	39	41	976
Inyo	Bishop AP	16	37.4	4108	118.4	103	61	100	60	99	60	97	58	64	62	40	5	3	7	4313
Inyo	Death Valley	14	36.5	-194	116.9	121	77	118	76	117	76	114	74	68	66	28	27	24	27	1147
Inyo	Deep Springs Clg	16	37.5	5225	118.0	98	60	95	59	94	59	92	58	81	79	35	-3	33	37	
Inyo	Haiwee	16	36.1	3825	118.0	102	65	99	64	98	64	95	62	73	71	27	15	36	38	3700
Inyo	Independence	16	36.8	3950	118.2	104	61	101	60	100	60	97	60	80	78	31	12	34	36	
Inyo	Wildrose RS	16	36.3	4100		100	64	97	63	96	63	93	61	74	72	33	13	28	30	
Kern	Alta Sierra	16	35.7	6500	118.6	87	62	84	61	83	61	80	59	65	63	32	-4	1	8	
Kern	Arvin	13	35.2	445	118.8	106	71	102	69	101	69	98	68	74	72	30	26	29	32	
Kern	Bakersfield AP	13	35.4	475	119.1	106	71	102	70	101	70	98	68	77	75	34	26	28	31	2185
Kern	Blackwells Corner	13	35.6	644	119.9	99	68	94	66	93	66	89	65	66	64	31	23	38	40	
Kern	Boron AFS	14	35.1	3015	117.6	106	70	103	69	102	69	98	68	70	68	35	18	32	34	3000
Kern	Buttonwillow	13	35.4	269	119.5	103	71	99	70	98	70	95	68	67	65	36	20	26	29	2621
Kern	California City	14	35.1	2400	118.0	107	69	104	68	103	68	99	66	72	70	33	10	17	22	
Kern	Cantil	14	35.3	2010	118.0	111	71	107	71	106	71	103	70	74	72	32	12	30	33	
Kern	Delano	13	35.8	323	119.3	106	71	102	70	101	70	98	69	74	72	36	22	25	28	
Kern	Edwards AFB	14	34.9	2316	117.9	107	69	104	68	103	68	99	66	73	71	35	10	35	37	3123
Kern	Glennville	16	35.7	3140	118.7	97	67	94	66	93	66	90	64	73	71	43	11	35	37	4423
Kern	Golden Hills	16	35.1	4000		97	66	93	65	92	65	89	64	69	67	33	13	20	24	
Kern	Greenacres	13	35.3	400	119.1	106	71	102	70	101	70	98	68	74	72	34	26	31	35	
Kern	Hillcrest Center	16	35.4	500		106	71	102	70	101	70	98	68	74	72	34	26	31	35	
Kern	Inyokern NAS	14	35.7	2440	117.8	110	71	106	68	105	68	102	66	70	68	37	15	40	42	2772
Kern	Kern River PH 3	16	35.8	2703	118.6	103	69	100	68	99	68	96	66	75	73	34	19	35	37	2891

						Cooling											Heating			
						0.1%		0.5%		1.0%		2.0%								
County	City	Climate Zone	Latitude	Elevation (ft)	Longitude	DB	MCWB	DB	MCWB	DB	MCWB	DB	MCWB	Design Wetbulb 0.1%	Design Wetbulb 0.5%	Outdoor Daily Range	Winter Median of Extremes	Design Drybulb (0.2%)	Design Drybulb (0.6%)	HDD*
Kern	Lamont	13	35.3	500	120.0	106	72	102	71	101	71	98	69	75	73	34	26	32	35	
Kern	Maricopa	13	35.1	675	119.4	106	71	102	70	101	70	98	68	74	71	29	25	30	33	2302
Kern	McFarland	13	35.6	350	119.2	106	71	102	70	101	70	98	69	74	72	36	22	25	28	
Kern	Mojave	14	35.1	2735	118.2	106	68	102	67	101	67	98	66	70	68	35	16	34	36	3012
Kern	Oildale	13	35.5	450	119.0	106	71	102	70	101	70	98	68	70	68	34	26	37	39	
Kern	Randsburg	14	35.3	3570	117.7	105	67	102	66	101	66	97	65	71	67	30	19	37	40	2922
Kern	Ridgecrest	14	35.6	2340	117.8	110	70	106	68	105	68	102	66	75	71	35	15	22	26	
Kern	Rosamond	14	34.8	2326	118.2	106	68	102	67	101	67	98	66	71	69	35	16	22	26	
Kern	Shafter	13	35.5	345	119.2	106	71	102	70	101	70	98	68	74	71	28	24	33	36	2185
Kern	Taft	13	35.1	987	119.5	106	71	102	70	101	70	98	68	74	72	34	26	31	35	
Kern	Tehachapi	16	35.1	3975	118.5	97	66	93	65	92	65	89	64	74	71	33	13	32	35	4494
Kern	Wasco	13	35.6	333	119.3	105	71	101	70	100	70	97	68	71	69	36	23	22	26	2466
Kings	Avenal	13	36.0	550	120.1	103	70	98	70	97	70	93	69	73	72	34	23	28	31	
Kings	Corcoran	13	36.1	200	119.7	106	72	102	71	101	71	98	70	74	72	36	22	33	35	2666
Kings	Hanford	13	36.3	242	119.7	102	71	99	70	98	70	94	68	73	70	37	22	30	32	2736
Kings	Kern River PH 1	13	35.5	970	118.8	106	72	103	71	102	71	99	69	75	73	26	30	28	30	1878
Kings	Kettleman Stn	13	36.1	508	120.1	104	71	100	70	98	70	93	68	72	70	31	26	25	28	2180
Kings	Lemoore NAS	13	36.3	228	120.0	104	72	101	71	100	71	97	69	74	72	37	19	30	33	2960
Lake	Clearlake Highlands	2	39.0	1360	122.7	101	69	97	68	95	67	89	65	71	68	36	15	32	35	
Lake	Lakeport	2	39.0	1347	122.9	97	67	93	66	92	65	88	63	74	72	41	20	27	30	3728
Lake	Upper Lake RS	2	39.2	1347	123.0	98	68	95	67	94	66	91	64	73	71	39	18	34	36	
Lassen	Doyle	16	40.0	4390	120.1	96	63	93	62	92	61	88	59	68	66	42	0	20	24	
Lassen	Fleming Fish & Game	16	40.4	4000	120.3	96	62	93	61	92	61	88	59	73	71	40	-3	27	30	
Lassen	Lodgepole	16	36.6	6735	118.7	84	57	80	56	80	56	78	54	72	70	26	-4	28	31	
Lassen	Susanville AP	16	40.4	4148	120.6	98	62	95	61	94	61	90	59	70	68	38	-1	34	36	6233
Los Angeles	Agoura Hills	9	34.2	700	118.8	103	70	96	68	94	68	90	66	73	71	29	27	31	34	
Los Angeles	Alhambra	9	34.0	483	118.1	100	71	96	70	94	70	90	68	73	71	25	30	35	37	
Los Angeles	Alondra Park	6	33.9	50	118.3	91	69	86	68	85	68	81	66	71	69	17	35	40	42	
Los Angeles	Altadena	9	34.2	1200	118.1	99	68	94	67	92	67	88	66	65	63	31	32	1	8	1920

						Cooling											Heating			
						0.1%		0.5%		1.0%		2.0%								
County	City	Climate Zone	Latitude	Elevation (ft)	Longitude	DB	MCWB	DB	MCWB	DB	MCWB	DB	MCWB	Design Wetbulb 0.1%	Design Wetbulb 0.5%	Outdoor Daily Range	Winter Median of Extremes	Design Drybulb (0.2%)	Design Drybulb (0.6%)	HDD*
Los Angeles	Arcadia	9	34.2	475	118.0	100	69	96	68	95	68	91	67	73	71	30	31	36	38	
Los Angeles	Artesia	8	33.8	50	118.1	99	71	91	70	89	70	85	68	73	71	23	33	37	40	
Los Angeles	Avalon	6	33.4	25	118.3	83	64	75	62	73	62	69	60	74	72	11	37	32	35	2204
Los Angeles	Avocado Heights	16	34.2	550	118.0	101	69	97	68	95	68	91	68	73	72	30	28	28	31	
Los Angeles	Azusa	9	34.1	605	118.2	101	70	97	69	95	69	91	68	74	72	36	31	36	38	
Los Angeles	Baldwin Park	9	34.0	394	118.0	100	69	96	69	94	69	90	68	73	72	32	31	36	38	
Los Angeles	Bell	8	33.9	143	118.2	97	70	91	69	89	69	85	67	72	70	22	33	38	41	
Los Angeles	Bell Gardens	8	33.9	160	118.2	97	70	91	69	87	67	78	62	72	70	24	29	37	40	
Los Angeles	Bellflower	8	33.8	73	118.1	98	70	91	69	89	69	85	67	72	70	21	32	37	40	
Los Angeles	Beverly Hills	9	34.1	268	118.2	94	69	88	68	87	68	83	66	71	69	20	39	43	46	
Los Angeles	Burbank AP	9	34.2	699	118.4	101	70	96	68	94	68	90	67	72	70	28	29	35	38	1701
Los Angeles	Burbank Vly Pump	9	34.2	655	118.4	101	69	96	68	94	68	90	66	72	70	28	29	34	36	1678
Los Angeles	Calabasas	9	34.2	1100	118.6	102	71	98	70	97	70	93	69	70	68	26	26	31	34	2348
Los Angeles	Canoga Park	9	34.2	790	118.6	104	71	99	70	97	70	93	69	71	69	38	25	23	27	1884
Los Angeles	Carson	6	33.8	60	118.3	96	69	88	68	86	68	82	66	71	69	19	33	38	40	
Los Angeles	Cerritos	8	33.9	34	118.1	99	71	92	69	90	69	85	68	65	63	23	33	6	13	
Los Angeles	Charter Oak	9	34.1	600	117.9	101	70	97	69	95	69	91	68	74	72	34	29	34	36	
Los Angeles	Chatsworth	9	34.2	964	118.6	98	69	93	68	91	68	87	66	72	70	38	26	31	34	
Los Angeles	Claremont	9	34.1	1201	117.8	101	69	97	68	95	68	91	66	74	72	34	29	26	29	2049
Los Angeles	Commerce	8	33.9	175	118.2	98	69	92	68	90	68	86	67	74	72	23	33	33	35	
Los Angeles	Compton	8	33.9	71	118.2	97	69	90	68	88	68	83	67	74	72	21	33	33	35	1606
Los Angeles	Covina	9	34.1	575	117.9	101	70	97	69	95	69	91	68	72	70	34	29	28	31	
Los Angeles	Cudahy	8	33.9	130	118.2	98	70	91	69	89	69	85	67	72	70	21	33	37	39	
Los Angeles	Culver City	8	34.0	106	118.4	96	70	88	69	87	69	83	67	72	70	18	35	37	39	1515
Los Angeles	Del Aire	6	34.0	100		91	69	84	67	83	67	79	66	71	69	15	37	40	42	
Los Angeles	Diamond Bar	9	34.0	880	117.8	101	69	97	68	96	68	92	66	73	71	33	28	33	35	
Los Angeles	Downey	8	33.9	110	118.0	98	71	90	70	88	70	84	68	73	71	21	32	37	39	
Los Angeles	Duarte	9	34.1	500	118.0	100	69	96	68	94	68	90	67	73	71	33	31	36	38	
Los Angeles	East Compton	8	34.0	71		97	69	90	68	88	68	83	67	72	70	21	33	37	39	

						Cooling											Heating			
						0.1%		0.5%		1.0%		2.0%								
County	City	Climate Zone	Latitude	Elevation (ft)	Longitude	DB	MCWB	DB	MCWB	DB	MCWB	DB	MCWB	Design Wetbulb 0.1%	Design Wetbulb 0.5%	Outdoor Daily Range	Winter Median of Extremes	Design Drybulb (0.2%)	Design Drybulb (0.6%)	HDD*
Los Angeles	East La Mirada	9	33.9	115		99	70	91	69	89	69	85	68	73	71	26	31	36	38	
Los Angeles	East Los Angeles	9	34.0	250	118.3	99	69	92	68	90	68	86	67	72	70	21	38	41	43	
Los Angeles	East Pasadena	16	34.2	864	118.1	99	69	94	68	92	68	88	67	73	71	30	32	37	40	
Los Angeles	East San Gabriel	9	34.1	450		99	70	94	69	92	69	88	68	73	71	30	30	35	37	
Los Angeles	El Monte	9	34.1	271	118.0	101	71	97	70	95	70	91	68	73	71	30	31	36	39	
Los Angeles	El Segundo	6	33.9	105	118.4	91	69	84	68	83	68	79	66	71	69	14	37	34	37	
Los Angeles	Encino	9	34.2	750	118.5	103	71	98	69	96	69	92	67	74	71	27	28	33	36	
Los Angeles	Fairmont	14	34.7	3060	118.4	100	67	96	66	95	66	92	65	73	71	22	22	30	33	3330
Los Angeles	Florence-Graham	8	34.0	175		98	69	90	68	88	68	84	67	72	70	19	35	40	43	
Los Angeles	Gardena	8	33.9	40	118.3	92	69	85	68	84	68	80	66	71	69	18	32	37	39	
Los Angeles	Glendale	9	34.2	563	118.3	101	70	96	68	94	68	90	67	72	69	28	30	28	31	
Los Angeles	Glendora	9	34.1	822	117.9	102	69	98	68	96	68	92	67	73	71	35	30	35	37	
Los Angeles	Granada Hills	6	34.4	1032	118.5	100	70	95	68	93	68	89	66	73	70	37	28	31	34	
Los Angeles	Hacienda Hts	9	34.0	300	118.0	100	69	96	68	94	68	90	67	73	71	28	31	36	38	
Los Angeles	Hawaiian Gardens	8	33.8	75	118.1	97	70	91	69	89	69	84	67	72	70	23	32	37	39	
Los Angeles	Hawthorne	8	33.9	70	118.4	92	69	85	68	84	68	80	66	71	69	16	37	40	42	
Los Angeles	Hermosa Beach	6	33.9	16	118.4	92	69	84	68	82	68	78	66	71	69	12	38	42	45	
Los Angeles	Hollywood	9	34.0	384	118.4	96	70	89	69	87	69	83	67	72	70	20	36	41	44	
Los Angeles	Huntington Park	8	34.0	175	118.0	98	70	90	69	88	69	84	67	58	56	20	38	11	16	
Los Angeles	Inglewood	8	33.9	105	118.0	92	68	85	67	84	67	80	65	70	68	15	37	40	42	
Los Angeles	La Canada-Flintridge	9	34.2	1365	118.0	99	69	95	68	93	68	88	66	73	71	30	32	25	28	
Los Angeles	La Crescenta-Montrose	9	34.2	1565	118.0	98	69	94	68	92	68	87	66	72	70	33	31	35	37	
Los Angeles	La Habra Heights	9	34.0	400	118.0	100	69	94	68	92	68	87	67	72	70	27	30	35	37	
Los Angeles	La Mirada	9	33.9	115	118.0	99	70	91	69	89	69	85	68	73	71	26	31	36	38	
Los Angeles	La Puente	9	34.0	320	118.0	101	71	97	70	95	70	91	69	74	72	28	31	36	38	
Los Angeles	La Verne	9	34.1	1235	118.0	101	69	97	68	95	68	91	67	73	71	34	29	34	36	
Los Angeles	Ladera Heights	9	34.1	100		91	67	84	67	83	67	79	66	71	69	14	37	40	42	
Los Angeles	Lake Los Angeles	14	34.7	2300	117.8	106	68	102	67	101	67	98	66	72	70	35	12	17	20	
Los Angeles	Lakewood	8	33.9	45	118.0	98	70	90	68	88	68	84	66	72	70	22	33	37	40	

						Cooling											Heating			
						0.1%		0.5%		1.0%		2.0%								
County	City	Climate Zone	Latitude	Elevation (ft)	Longitude	DB	MCWB	DB	MCWB	DB	MCWB	DB	MCWB	Design Wetbulb 0.1%	Design Wetbulb 0.5%	Outdoor Daily Range	Winter Median of Extremes	Design Drybulb (0.2%)	Design Drybulb (0.6%)	HDD*
Los Angeles	Lancaster	14	34.7	2340	118.2	106	68	102	67	101	67	98	66	72	70	35	12	17	20	
Los Angeles	Lawndale	8	33.9	66	118.0	92	69	85	68	84	68	80	66	71	69	16	37	40	42	
Los Angeles	Lennox	8	33.9	71	117.8	92	69	85	68	84	68	80	66	71	69	16	37	41	44	
Los Angeles	Llano Shawnee	14	34.5	3820	117.8	104	68	99	67	98	67	95	65	71	69	31	21	27	31	
Los Angeles	Lomita	6	33.8	56	119.0	95	69	87	68	85	68	81	66	71	69	18	33	38	40	
Los Angeles	Long Beach	6	33.7	34	118.2	97	70	88	68	86	67	82	65	65	63	18	35	31	34	
Los Angeles	Long Beach AP	8	33.8	25	118.2	99	71	90	69	88	68	84	66	65	63	21	33	31	34	1606
Los Angeles	Los Angeles AP	6	33.9	97	118.4	91	67	84	67	83	67	79	66	68	66	14	37	33	35	1819
Los Angeles	Los Angeles CO	9	34.0	270	118.2	99	69	92	68	90	68	86	67	71	69	21	38	40	42	1245
Los Angeles	Lynwood	8	33.9	88	118.0	98	70	90	69	88	69	83	67	64	62	21	32	35	37	
Los Angeles	Manhattan Beach	6	33.9	120	118.0	91	69	84	68	83	68	79	66	71	69	12	38	42	45	
Los Angeles	Marina del Rey	9	34.1	40	118.5	91	69	84	68	83	68	79	66	71	69	12	38	42	45	
Los Angeles	Maywood	8	34.0	170	118.0	97	70	91	69	89	69	85	67	72	70	21	34	38	41	
Los Angeles	Monrovia	9	34.2	562	118.3	100	69	96	68	94	68	90	67	73	71	30	33	38	41	
Los Angeles	Montebello	9	34.0	205	118.1	98	69	93	68	91	68	86	67	72	70	24	33	37	39	
Los Angeles	Monterey Park	9	34.0	380	118.0	99	69	94	68	92	68	87	67	72	70	23	30	35	37	
Los Angeles	Mount Wilson	16	34.2	5709	118.1	90	63	85	61	83	60	79	58	65	63	21	15	15	20	4296
Los Angeles	Newhall Soledad	9	34.4	1243	118.6	104	70	100	68	99	68	95	67	73	71	42	27	33	36	
Los Angeles	North Hollywood	9	34.2	619	118.4	102	70	97	69	95	69	91	67	73	71	31	28	28	31	
Los Angeles	Northridge	9	34.2	875	118.5	101	70	96	69	94	69	90	67	73	71	36	30	35	38	
Los Angeles	Norwalk	8	33.9	97	118.1	99	69	90	68	88	68	84	67	72	70	26	31	35	37	
Los Angeles	Pacoima	16	34.3	895	118.4	104	71	99	70	98	70	94	68	74	72	35	29	34	37	
Los Angeles	Palmdale AP	14	34.6	2517	118.1	107	67	103	67	102	66	98	64	79	78	33	12	31	34	2929
Los Angeles	Palmdale CO	14	34.6	2596	118.1	106	67	102	67	101	66	97	64	71	69	35	13	20	24	2908
Los Angeles	Palos Verdes	6	33.8	216	119.0	92	69	84	68	82	68	78	66	71	69	14	38	43	46	
Los Angeles	Panorama City	9	34.2	801	118.5	103	71	98	69	96	69	92	67	74	71	32	28	33	36	
Los Angeles	Paramount	8	33.9	70	117.0	98	70	90	69	88	69	84	67	72	70	22	32	37	40	
Los Angeles	Pasadena	9	34.2	864	118.2	99	69	94	68	92	68	88	67	75	73	30	32	30	34	1551
Los Angeles	Pico Rivera	9	34.0	180	118.0	98	70	91	69	89	69	85	67	72	70	24	31	35	38	

						Cooling											Heating			
						0.1%		0.5%		1.0%		2.0%								
County	City	Climate Zone	Latitude	Elevation (ft)	Longitude	DB	MCWB	DB	MCWB	DB	MCWB	DB	MCWB	Design Wetbulb 0.1%	Design Wetbulb 0.5%	Outdoor Daily Range	Winter Median of Extremes	Design Drybulb (0.2%)	Design Drybulb (0.6%)	HDD*
Los Angeles	Pomona Cal Poly	9	34.1	740	117.8	102	70	98	69	97	69	93	67	62	60	36	27	41	43	1971
Los Angeles	Quartz Hill	14	34.6	2428	118.2	106	68	102	67	101	67	98	66	72	70	35	12	17	20	
Los Angeles	Rancho Palos Verdes	6	33.7	216	118.2	92	69	84	68	82	68	78	66	71	69	14	38	43	46	
Los Angeles	Redondo Beach	6	33.8	45	118.3	92	69	84	68	82	68	78	66	71	69	12	37	42	44	
Los Angeles	Reseda	9	34.2	736	118.5	103	71	98	69	96	69	92	67	74	71	32	28	33	36	
Los Angeles	Rolling Hills	6	33.6	216	119.0	92	69	84	68	82	68	78	66	71	69	15	38	43	46	
Los Angeles	Rosemead	9	34.0	275	118.0	98	70	90	69	88	69	84	67	72	70	27	30	35	37	
Los Angeles	Rowland Hts	9	33.9	540	118.0	99	70	93	69	91	69	86	68	73	71	27	29	34	36	
Los Angeles	San Antonio Canyon	16	34.2	2394	117.7	100	68	96	67	94	67	90	65	66	64	33	29	25	28	
Los Angeles	San Dimas	9	34.0	955	118.4	102	70	98	69	96	69	92	67	66	64	35	30	25	28	
Los Angeles	San Fernando	9	34.3	977	118.5	104	71	99	70	98	70	94	68	66	64	37	30	25	28	1800
Los Angeles	San Gabriel FD	9	34.1	450	118.1	99	70	94	69	92	69	88	68	66	64	30	30	25	28	1532
Los Angeles	San Marino	9	34.2	300	118.1	100	69	95	68	93	68	88	66	72	70	28	30	31	34	
Los Angeles	San Pedro	6	33.7	10	118.3	92	69	84	68	82	68	78	66	72	70	13	35	31	34	1819
Los Angeles	Sandberg	16	34.8	4517	118.7	95	63	91	61	90	61	87	59	70	68	32	17	29	32	4427
Los Angeles	Santa Clarita	9	34.4	1300	118.5	103	71	98	70	97	70	93	68	74	72	36	30	35	37	
Los Angeles	Santa Fe Springs	9	33.9	280	118.1	99	69	90	68	88	68	84	67	74	72	24	31	35	37	
Los Angeles	Santa Monica	6	34.0	15	118.5	85	67	78	66	76	66	72	64	67	65	15	39	31	33	1873
Los Angeles	Sepulveda	9	34.2	818	118.5	103	71	98	69	96	69	92	67	74	71	32	28	33	36	
Los Angeles	Sherman Oaks	9	34.2	657	118.5	103	71	98	69	96	69	92	67	74	71	28	29	34	37	
Los Angeles	Sierra Madre	9	34.2	1153	118.1	102	69	96	68	94	68	90	67	73	71	27	32	37	39	
Los Angeles	Signal Hill	6	33.5	100	118.2	99	70	90	69	88	68	84	66	72	70	19	35	39	42	
Los Angeles	South El Monte	9	34.0	270	118.1	101	72	97	70	95	70	91	68	74	72	28	31	36	38	
Los Angeles	South Gate	8	33.9	120	118.2	97	70	90	69	88	69	84	67	72	70	21	32	37	39	
Los Angeles	South Pasadena	9	34.0	657	118.2	99	69	94	68	92	68	88	67	73	71	30	31	36	38	
Los Angeles	South San Gabriel	9	34.1	450	118.1	99	70	94	69	92	69	88	68	73	71	73	30	35	37	
Los Angeles	South Whittier	9	33.9	300	118.0	100	70	92	69	90	69	84	68	73	71	30	31	36	38	
Los Angeles	Studio City	9	34.3	620	118.4	102	70	97	69	95	69	91	67	73	71	31	28	33	36	
Los Angeles	Sunland	9	34.3	1460	118.3	107	71	102	70	100	70	96	68	74	72	36	28	33	36	

						Cooling											Heating			
						0.1%		0.5%		1.0%		2.0%								
County	City	Climate Zone	Latitude	Elevation (ft)	Longitude	DB	MCWB	DB	MCWB	DB	MCWB	DB	MCWB	Design Wetbulb 0.1%	Design Wetbulb 0.5%	Outdoor Daily Range	Winter Median of Extremes	Design Drybulb (0.2%)	Design Drybulb (0.6%)	HDD*
Los Angeles	Tarzana	6	34.2	800	118.6	104	71	99	69	97	69	93	68	74	71	27	27	32	35	
Los Angeles	Tejon Rancho	16	35.0	1425	118.8	107	71	103	70	102	70	99	68	69	67	27	24	20	24	2602
Los Angeles	Temple City	9	34.1	403	118.1	101	70	95	69	93	69	89	68	73	71	27	30	35	37	
Los Angeles	Termo	16	40.9	5300	120.5	95	60	92	59	91	59	87	57	73	71	37	-17	35	37	
Los Angeles	Torrance	6	33.8	110	118.3	93	69	86	68	84	68	80	66	67	65	18	32	34	36	1859
Los Angeles	Tujunga	9	34.3	1820	118.3	103	70	99	69	98	69	94	67	62	60	36	20	-4	0	
Los Angeles	UCLA	9	34.1	430		93	69	86	68	84	68	80	66	71	69	20	39	31	34	1509
Los Angeles	Valinda	9	34.0	340	117.9	102	70	98	69	96	69	92	68	74	72	28	31	36	38	
Los Angeles	Valyermo RS	14	34.5	3600	117.9	100	67	96	66	95	66	91	65	70	68	41	12	33	36	3870
Los Angeles	Van Nuys	9	34.2	708	118.5	103	71	98	69	96	69	92	67	74	71	30	28	33	39	
Los Angeles	View Park	6, 8	34.0	300	118.3	95	69	88	68	85	68	78	66	71	69	18	36	40	43	
Los Angeles	Vincent	14	34.5	3135	118.1	105	67	101	65	100	65	96	64	72	70	33	10	37	40	
Los Angeles	Walnut	9	34.0	550	117.9	101	70	97	69	96	69	92	69	74	72	30	28	33	35	
Los Angeles	Walnut Park	8	33.9	45	118.2	92	69	84	68	82	68	78	66	71	69	12	37	42	44	
Los Angeles	West Athens	8	33.9	25		92	69	85	68	84	68	80	66	71	69	18	32	37	39	
Los Angeles	West Carson	6	33.8	100		92	69	87	68	85	68	81	66	71	69	18	32	37	39	
Los Angeles	West Compton	8	33.9	71		97	69	90	68	88	68	83	67	72	70	21	33	37	39	
Los Angeles	West Covina	9	34.0	365	117.9	102	70	98	69	96	69	92	68	74	72	34	29	34	36	
Los Angeles	West Hollywood	9	34.0	290	118.4	95	70	89	69	87	69	82	67	72	70	20	38	42	45	
Los Angeles	West Puente Valley	9	34.0	500	117.9	101	71	97	70	95	70	91	68	73	71	26	31	36	39	
Los Angeles	West Whittier-Los Nietos	9	34.0	320	118.1	99	69	90	68	88	68	84	67	0	0	24	31	0	0	
Los Angeles	Westlake Village	9	34.2	750	118.8	103	71	99	70	98	70	94	69	73	71	26	26	30	33	
Los Angeles	Westmont	8	33.9	110		96	70	89	69	87	69	83	67	72	70	20	36	41	44	
Los Angeles	Whittier	9	34.0	320	118.0	99	69	90	68	88	68	84	67	72	70	24	31	35	38	
Los Angeles	Willow Brook	8	33.9	60	118.2	97	70	90	69	88	69	83	67	72	70	21	35	39	42	
Los Angeles	Woodland Hills	9	34.2	944	118.6	104	71	99	70	97	70	93	68	74	72	32	26	31	34	
Madera	Bonita	13	32.7	105	117.0	91	69	82	67	81	66	78	64	0	0	20	28	0	0	1864
Madera	Chowchilla	13	37.0	200	120.3	104	72	101	70	100	70	96	68	74	72	38	22	28	31	
Madera	Madera	13	37.0	268	120.1	105	72	101	70	100	70	96	68	67	65	40	24	35	37	2673

						Cooling											Heating			
						0.1%		0.5%		1.0%		2.0%								
County	City	Climate Zone	Latitude	Elevation (ft)	Longitude	DB	MCWB	DB	MCWB	DB	MCWB	DB	MCWB	Design Wetbulb 0.1%	Design Wetbulb 0.5%	Outdoor Daily Range	Winter Median of Extremes	Design Drybulb (0.2%)	Design Drybulb (0.6%)	HDD*
Madera	Madera Acres	13	36.9	275		105	72	101	70	100	70	96	68	74	72	40	24	29	32	
Madera	North Fork RS	16	37.2	2630	119.5	98	66	95	65	94	64	92	62	72	69	36	15	30	33	
Marin	Corte Madera	2	37.9	55	122.5	97	68	91	66	89	66	84	64	73	71	34	28	28	31	
Marin	Fairfax	2	38.0	110	122.6	96	68	90	66	88	65	83	63	71	68	34	26	31	34	
Marin	Fort Baker	3	37.8	15	122.5	87	66	81	65	79	65	73	65	67	65	12	33	19	24	3080
Marin	Hamilton AFB	2	38.1	3	122.5	95	69	88	67	86	67	81	65	65	63	28	27	37	39	3311
Marin	Kentfield	2	38.0	120	122.6	97	66	91	65	89	65	84	63	69	67	35	27	24	26	3009
Marin	Larkspur	2	37.9	20	122.5	97	68	91	66	89	66	84	64	69	68	34	28	33	35	
Marin	Mill Valley	3	37.9	80	122.6	97	68	91	66	89	66	84	64	70	68	28	28	33	36	3400
Marin	Novato	2	38.1	370	122.5	94	64	87	63	85	63	80	61	68	66	30	25	30	32	
Marin	San Anselmo	2	38.0	50	122.0	95	67	89	66	87	66	82	65	66	64	32	26	25	28	
Marin	San Rafael	2	38.0	40	122.6	96	67	90	65	88	65	83	63	72	70	29	30	31	34	2440
Marin	Tamalpais-Homestead Valley	3	37.9	25		97	68	91	66	89	66	84	64	0	0	28	28	0	0	
Marin	Tiburon	3	37.9	90	122.5	85	66	80	65	78	65	73	63	67	65	12	30	34	36	
Mariposa	Catheys Valley	12	37.4	1000	120.1	102	69	99	68	98	68	94	67	79	78	38	21	31	34	
Mariposa	Dudleys	12	37.7	3000	120.1	97	65	94	64	93	64	90	62	70	68	44	10	29	32	4959
Mariposa	Yosemite Park Hq	16	37.7	3970		97	63	94	62	93	62	90	60	69	67	38	11	28	31	4785
Mendocino	Covelo	2	39.8	1385	123.3	99	67	93	65	91	65	87	63	72	70	43	15	28	31	4179
Mendocino	Fort Bragg	1	39.5	80	123.8	75	60	67	59	66	59	62	58	64	62	15	29	3	10	4424
Mendocino	Point Arena	1	38.9	100	123.7	76	62	72	60	71	60	67	58	70	68	19	29	29	32	4747
Mendocino	Potter Valley PH	2	39.4	1015	123.1	101	68	96	67	94	67	89	65	65	63	40	20	16	21	3276
Mendocino	Ukiah	2	39.2	623	123.2	100	70	97	69	96	69	92	68	71	69	42	22	43	46	2958
Mendocino	Willits	2	39.4	1350	123.3	95	66	89	65	87	64	82	62	73	71	38	18	29	32	
Merced	Atwater	12	37.3	150	120.6	102	72	99	70	98	69	94	67	74	72	38	24	30	34	
Merced	Castle AFB	12	37.4	188	120.6	105	71	101	70	100	70	96	69	72	70	33	24	38	41	2590
Merced	Le Grand	12	37.2	255	120.3	101	70	96	68	95	68	91	66	71	69	38	23	40	42	2696
Merced	Livingston	12	37.3	165	120.7	103	72	100	70	99	70	95	68	74	72	39	24	30	34	
Merced	Los Banos	12	37.0	120	120.9	100	70	96	68	94	68	88	67	72	70	42	22	41	43	2616
Merced	Los Banos Res	12	37.0	407	120.9	101	70	97	68	95	68	89	67	72	70	42	23	28	31	

						Cooling											Heating			
						0.1%		0.5%		1.0%		2.0%								
County	City	Climate Zone	Latitude	Elevation (ft)	Longitude	DB	MCWB	DB	MCWB	DB	MCWB	DB	MCWB	Design Wetbulb 0.1%	Design Wetbulb 0.5%	Outdoor Daily Range	Winter Median of Extremes	Design Drybulb (0.2%)	Design Drybulb (0.6%)	HDD*
Merced	Merced AP	12	37.3	153	120.6	103	71	100	69	99	69	95	67	74	72	36	21	32	35	2653
Merced	San Luis Dam	12	37.1	277	121.1	97	68	91	66	90	66	86	64	66	64	32	25	25	28	
Merced	Volta PH	12	40.5	2220	120.9	101	66	98	65	97	65	93	63	72	70	33	21	35	37	
Merced	Winton	12	37.4	168	120.6	103	71	100	69	99	69	95	67	73	71	36	21	27	30	
Modoc	Adin RS	16	41.2	4195	121.0	96	61	92	60	91	60	88	59	70	68	43	-7	24	27	
Modoc	Alturas RS	16	41.5	4400	120.6	99	62	96	61	95	61	91	59	72	70	43	-10	37	39	6895
Modoc	Cedarville	16	41.5	4670	120.2	97	61	94	60	93	60	89	58	65	63	35	1	20	24	6304
Modoc	Fort Bidwell	16	41.9	4498	120.1	93	60	90	59	89	59	85	57	67	65	38	-2	38	40	6381
Modoc	Jess Valley	16	41.3	5300	120.3	92	59	89	58	88	58	84	56	73	71	35	-7	35	37	7045
Mono	Bodie	16	38.2	8370	119.0	83	50	80	49	79	49	76	48	62	60	42	-21	-13	-10	
Mono	Bridgeport	16	38.2	6470	119.2	89	56	86	54	85	54	82	53	71	68	41	-20	32	35	
Mono	Mono Lake	16	38.0	6450	119.2	91	58	88	57	87	57	84	55	71	69	32	4	22	26	6518
Mono	Twin Lakes	16	38.7	7829	119.1	73	49	64	47	62	47	57	46	73	71	30	-7	31	34	9196
Mono	White Mtn 1	16	37.5	10150		73	49	69	47	68	47	65	45	72	70	37	-15	30	33	
Mono	White Mtn 2	16	37.6	12470		61	42	58	41	57	41	54	40	53	50	38	-20	-9	-6	
Monterey	Camp Roberts	4	35.8	765	120.8	106	72	101	71	99	71	95	69	71	69	45	16	38	40	2890
Monterey	Carmel Valley	3	36.5	425	121.7	94	68	88	66	86	66	80	65	70	68	20	25	38	40	
Monterey	Carmel-by-the-Sea	3	36.5	20	121.9	87	65	78	62	76	62	71	61	66	63	20	30	35	38	
Monterey	Castroville	3	36.8	20	121.8	86	66	77	63	75	63	70	61	67	64	18	32	37	40	
Monterey	Fort Ord	3	36.7	134	121.8	86	65	77	63	75	62	70	60	71	69	18	24	40	42	3818
Monterey	Greenfield	4	36.2	287	121.2	92	67	88	65	87	65	84	64	70	68	32	22	27	30	
Monterey	King City	4	36.2	320	121.1	94	67	90	65	89	65	85	64	74	72	36	20	31	34	2639
Monterey	Marina	3	36.7	20	121.8	86	66	77	63	75	63	70	61	67	64	18	32	37	40	
Monterey	Monterey AP	3	36.6	245	121.9	86	65	77	62	75	62	70	61	72	70	20	30	37	39	3556
Monterey	Monterey CO	3	36.6	345	121.9	87	65	78	62	76	62	71	61	72	70	20	32	37	39	3169
Monterey	Pacific Grove	3	36.7	114	122.0	87	66	78	63	76	63	71	61	67	64	19	31	35	37	
Monterey	Priest Valley	4	36.2	2300	120.7	97	66	93	65	92	65	88	63	73	71	34	13	33	35	4144
Monterey	Prunedale	3	36.6	260	121.7	86	66	83	65	82	64	79	62	68	66	20	26	31	34	
Monterey	Salinas 3 E	3	36.7	85	121.6	86	66	83	65	82	64	79	62	73	71	20	26	35	37	

						Cooling											Heating			
						0.1%		0.5%		1.0%		2.0%								
County	City	Climate Zone	Latitude	Elevation (ft)	Longitude	DB	MCWB	DB	MCWB	DB	MCWB	DB	MCWB	Design Wetbulb 0.1%	Design Wetbulb 0.5%	Outdoor Daily Range	Winter Median of Extremes	Design Drybulb (0.2%)	Design Drybulb (0.6%)	HDD*
Monterey	Salinas AP	3	36.7	69	121.6	85	67	82	65	81	64	78	62	69	66	20	28	33	35	2959
Monterey	San Antonio Mission	4	36.0	1060	117.7	99	69	94	68	92	68	88	67	66	64	28	19	25	28	
Monterey	Seaside	4	36.6	17	122.9	85	66	79	64	77	64	73	62	67	65	20	30	35	37	
Monterey	Soledad	3	36.4	200	121.3	90	67	87	65	86	65	82	64	70	67	23	24	29	32	
Napa	American Canyon	2	37.6	85	122.3	93	67	90	66	88	66	84	64	70	68	23	28	33	36	
Napa	Angwin	2	38.6	1815	122.4	98	66	93	64	92	64	88	62	72	70	33	25	31	34	
Napa	Berryessa Lake	2	38.6	480	122.1	102	70	98	69	96	69	92	67	72	70	35	26	31	34	
Napa	Duttons Landing	2	38.2	20	122.3	96	68	91	66	89	66	84	64	68	66	31	26	17	22	
Napa	Markley Cove	2	38.5	480	122.1	104	70	99	69	97	69	93	67	71	69	39	23	42	45	
Napa	Napa State Hospital	2	37.3	60	122.3	94	67	91	67	90	67	86	66	70	68	29	26	28	31	2749
Napa	Saint Helena	2	38.5	225	122.5	102	70	98	69	97	69	93	67	73	71	40	22	35	37	2878
Nevada	Boca	16	39.4	5575	120.1	92	58	89	57	88	57	84	55	80	78	46	-18	29	32	8340
Nevada	Deer Creek PH	16	39.3	4455	120.9	93	61	91	60	90	60	87	58	64	62	39	10	2	8	5863
Nevada	Grass Valley	11	39.2	2400	121.1	99	67	96	65	95	65	91	63	59	57	29	19	14	19	
Nevada	Lake Spaulding	16	39.3	5156	120.6	89	58	86	57	85	57	83	55	72	70	34	3	17	20	6447
Nevada	Nevada City	11	39.3	2600	121.0	97	66	94	64	92	64	88	63	77	75	41	14	32	35	4900
Nevada	Truckee RS	16	39.3	5995	120.2	90	58	87	57	86	57	82	55	76	73	40	-10	24	27	8230
Nevada/Placer	Donner Mem Stt Pk	16	39.3	5937	120.3	85	56	82	56	81	56	77	54	72	70	40	-3	29	32	
Orange	Aliso Viejo	8	33.6	50	117.7	91	69	83	68	81	68	76	66	71	69	18	30	33	36	
Orange	Anaheim	8	33.8	158	117.9	99	69	92	68	90	68	85	67	73	71	26	32	37	39	
Orange	Brea Dam	8	33.9	275	117.9	100	69	94	68	92	68	86	66	81	79	29	30	30	33	
Orange	Buena Park	8	33.9	75	118.0	98	69	92	68	90	68	85	67	72	70	25	31	35	38	
Orange	Costa Mesa	6	33.7	100	117.9	88	68	81	66	79	66	73	65	73	71	16	31	28	31	1482
Orange	Cypress	8	33.8	75	118.0	98	70	92	69	90	69	85	67	72	70	24	31	35	38	
Orange	Dana Point	6	33.5	100	117.7	91	69	84	68	82	68	78	66	71	69	13	30	33	36	
Orange	El Toro MCAS	8	33.7	380	117.7	96	69	89	69	87	69	82	68	69	67	26	34	35	38	1591
Orange	El Toro Station	8	33.7	380		96	69	89	69	87	69	82	68	73	71	26	34	38	41	
Orange	Fountain Valley	6	33.7	60	118.0	97	70	90	68	88	68	84	67	72	70	18	33	38	40	
Orange	Fullerton	8	33.9	340	117.9	100	70	94	69	92	69	87	68	73	71	26	30	35	37	

						Cooling											Heating			
						0.1%		0.5%		1.0%		2.0%								
County	City	Climate Zone	Latitude	Elevation (ft)	Longitude	DB	MCWB	DB	MCWB	DB	MCWB	DB	MCWB	Design Wetbulb 0.1%	Design Wetbulb 0.5%	Outdoor Daily Range	Winter Median of Extremes	Design Drybulb (0.2%)	Design Drybulb (0.6%)	HDD*
Orange	Garden Grove	8	33.6	85	117.9	98	70	91	68	89	68	84	67	72	70	23	31	36	38	
Orange	Huntington Beach	6	33.7	40	117.8	91	69	83	67	81	67	76	66	71	69	14	34	38	41	
Orange	Irvine	8	33.7	50	118.0	96	69	88	68	86	68	82	67	72	70	27	33	37	40	
Orange	John Wayne AP	6	33.6	115		98	70	91	68	89	68	84	67	63	61	26	33	-2	4	1496
Orange	La Habra	9	33.9	305	118.0	100	69	94	68	92	68	87	67	72	70	27	30	35	37	
Orange	La Palma	8	33.9	75	118.0	98	69	92	68	90	68	85	67	72	70	25	31	35	38	
Orange	Laguna Beach	6	33.5	35	117.8	91	69	83	68	81	68	76	66	71	69	18	30	29	32	2222
Orange	Laguna Niguel	6	33.6	500	117.7	95	67	87	66	85	65	81	63	71	67	22	33	37	40	
Orange	Los Alamitos NAS	8	33.8	30	118.1	98	71	89	69	87	69	83	68	74	72	23	32	27	30	1740
Orange	Mission Viejo	8	33.6	350	118.0	95	67	87	66	85	65	81	63	71	67	22	33	37	40	
Orange	Newport Beach	6	33.6	10	117.9	87	68	80	66	78	66	72	65	73	71	12	34	28	31	1952
Orange	Orange	8	33.6	194	118.0	99	70	92	68	90	68	85	67	72	70	27	33	37	40	
Orange	Placentia	8	33.9	323	118.0	101	69	93	68	91	68	87	67	73	71	28	30	34	37	
Orange	Rancho Santa Margarita	8	33.6	116		95	67	87	66	85	65	81	63	71	69	22	33	38	41	
Orange	Rossmoor	8	33.8	20	118.1	92	67	85	64	83	64	79	62	71	69	19	32	37	39	
Orange	San Clemente	6	33.4	208	118.6	91	68	85	67	84	67	80	66	66	64	12	31	25	28	
Orange	Santa Ana FS	8	33.8	115	117.8	98	70	91	68	89	68	84	67	70	68	26	33	29	32	1430
Orange	Seal Beach	6	33.8	21	118.1	94	69	86	68	84	67	80	65	69	67	15	35	32	35	1519
Orange	South Laguna	6	33.6	100	117.7	91	69	83	68	82	68	78	66	71	69	18	30	33	36	
Orange	Stanton	8	33.6	45	118.0	98	69	91	68	89	68	84	67	72	70	24	31	36	38	
Orange	Tustin Foothills	8	33.8	500		99	71	92	69	90	69	85	68	73	71	27	28	31	34	
Orange	Tustin Irvine Rch	8	33.7	118	117.8	99	71	92	69	90	69	85	68	73	71	27	28	31	34	1856
Orange	Villa Park	8	33.8	300	117.8	99	70	92	68	90	68	85	67	72	70	27	33	37	40	
Orange	Westminster	6	33.8	38	118.0	95	70	88	68	86	68	81	67	72	70	23	33	38	41	
Orange	Yorba Linda	8	33.9	350	117.8	102	70	94	69	92	69	88	68	69	67	31	30	28	31	1643
Placer	Auburn	11	38.9	1292	121.1	103	69	100	67	99	67	95	66	71	69	33	25	27	30	3089
Placer	Blue Canyon AP	16	39.3	5280	120.7	88	60	85	59	84	59	81	57	75	73	20	13	35	38	5704
Placer	Bowman Dam	11	39.4	5347	120.7	89	59	86	57	85	57	82	55	69	67	26	9	30	33	5964
Placer	Colfax	11	39.1	2418	121.0	100	66	97	65	96	65	92	63	74	72	29	22	33	35	3424

						Cooling											Heating			
						0.1%		0.5%		1.0%		2.0%								
County	City	Climate Zone	Latitude	Elevation (ft)	Longitude	DB	MCWB	DB	MCWB	DB	MCWB	DB	MCWB	Design Wetbulb 0.1%	Design Wetbulb 0.5%	Outdoor Daily Range	Winter Median of Extremes	Design Drybulb (0.2%)	Design Drybulb (0.6%)	HDD*
Placer	Donner Summit	16	39.4	7239	120.3	80	53	77	53	76	52	72	50	60	58	40	-8	3	6	8290
Placer	Loomis	11	38.8	408	121.2	107	71	103	70	102	70	98	69	74	72	39	21	27	30	
Placer	North Auburn	11	38.9	1300		103	69	100	67	99	67	95	66	72	69	33	25	30	33	
Placer	Rocklin	11	38.8	239	121.2	108	72	104	70	103	70	99	69	74	72	39	20	32	35	3143
Placer	Roseville	11	38.7	160	121.2	105	71	102	70	100	70	96	68	74	71	36	24	30	34	
Placer	Squaw Valley	16	39.2	6235	120.2	88	57	85	56	84	56	80	54	71	69	40	-10	38	41	
Placer	Tahoe City	16	39.2	6230	120.1	84	56	81	55	80	55	76	53	74	72	36	2	31	35	8085
Placer	Tahoe Valley AP	16	38.9	6254		85	56	82	55	81	55	77	53	60	58	38	-5	7	14	
Plumas	Canyon Dam	16	40.1	4555	121.1	93	60	90	59	89	59	85	57	74	73	39	1	19	24	6834
Plumas	Chester	16	40.3	4525	121.2	94	62	91	61	90	61	86	59	72	70	33	-3	31	34	
Plumas	Portola	16	39.8	4850	120.5	92	63	89	61	88	61	84	59	74	72	48	-9	30	33	7111
Plumas	Quincy	16	39.9	3409	120.9	101	64	98	63	97	63	93	62	72	70	45	1	17	20	5763
Plumas	Turntable Creek	16	40.8	1067		105	69	101	68	99	68	95	66	72	70	28	24	29	32	
Riverside	Banning	15	33.9	2349	116.9	104	69	100	68	99	68	96	67	73	71	34	20	26	30	
Riverside	Beaumont	10	33.9	2605	117.0	103	68	99	67	98	67	95	66	74	72	38	22	28	30	2628
Riverside	Blythe AP	15	33.6	395	114.7	115	74	112	73	111	73	108	71	64	62	27	28	20	24	1219
Riverside	Blythe CO	15	33.6	268	114.6	115	74	112	73	111	73	108	71	80	78	27	24	33	36	1312
Riverside	Canyon Lake	10	33.8	1500	117.3	105	70	101	69	100	69	97	68	74	72	39	22	27	30	
Riverside	Cathedral City	15	33.8	400	116.5	117	74	113	73	112	73	109	72	79	78	33	26	31	34	
Riverside	Coachella	15	33.7	-76	116.2	114	74	110	73	109	73	106	73	74	72	28	25	33	35	
Riverside	Corona	10	33.9	710	117.6	104	70	100	69	98	69	92	67	73	71	35	26	28	31	1794
Riverside	Desert Hot Springs	15	34.0	1060	116.5	115	73	111	72	110	72	107	71	78	77	35	24	29	32	
Riverside	Eagle Mtn	14	33.8	973	115.5	113	72	110	71	109	71	105	69	70	68	24	32	31	34	1138
Riverside	East Hemet	10	33.7	1655		109	70	104	69	103	69	101	67	74	72	40	20	25	28	
Riverside	Elsinore	10	33.7	1285	117.3	105	71	101	70	100	70	98	69	67	65	39	22	23	27	2128
Riverside	Glen Avon	10	34.0	827	117.5	105	70	101	69	99	69	95	67	72	69	35	28	28	31	
Riverside	Hayfield Pumps	14	33.7	1370	115.6	112	71	108	70	107	70	104	68	71	69	31	24	40	42	1529
Riverside	Hemet	10	33.7	1655	117.0	109	70	104	69	103	69	101	67	74	72	40	20	25	28	
Riverside	Home Gardens	10	33.9	678	117.5	104	70	100	69	98	69	92	67	74	72	35	26	31	34	

						Cooling											Heating			
						0.1%		0.5%		1.0%		2.0%								
County	City	Climate Zone	Latitude	Elevation (ft)	Longitude	DB	MCWB	DB	MCWB	DB	MCWB	DB	MCWB	Design Wetbulb 0.1%	Design Wetbulb 0.5%	Outdoor Daily Range	Winter Median of Extremes	Design Drybulb (0.2%)	Design Drybulb (0.6%)	HDD*
Riverside	Idyllwild	16	33.7	5397	116.7	93	62	89	61	88	61	84	60	68	66	35	9	29	32	
Riverside	Indio	15	33.7	11	116.3	115	75	112	75	111	75	107	74	65	63	30	24	19	24	1059
Riverside	La Quinta	15	33.8	400	116.3	116	74	112	73	111	73	108	72	79	78	34	26	32	34	
Riverside	Lake Elsinore	10	33.7	1233	117.3	105	70	101	69	100	69	97	68	74	72	39	22	27	30	
Riverside	Lakeland Village	10	33.6	1233	117.3	105	70	101	69	100	69	97	68	74	72	39	12	27	30	
Riverside	March AFB	10	33.9	1511	117.3	103	70	99	68	98	67	94	65	61	59	34	23	2	8	2089
Riverside	Mecca FS	15	33.6	-180	116.1	115	75	111	75	110	75	107	74	61	60	30	24	31	33	1185
Riverside	Mira Loma	10	34.0	700	117.5	105	70	101	69	99	68	95	66	74	72	34	25	33	36	
Riverside	Moreno Valley	10	33.9	1600	117.2	103	70	99	68	98	67	94	65	74	71	34	27	30	33	
Riverside	Mount San Jacinto	16	33.8	8417	116.6	82	56	77	55	76	55	73	53	63	61	35	-1	-4	0	
Riverside	Norco	10	33.9	700	117.0	103	70	99	69	98	69	94	67	74	72	34	27	32	35	
Riverside	Palm Desert	15	33.7	200	116.5	116	74	112	73	111	73	108	72	79	78	34	26	32	34	
Riverside	Palm Desert Country	15	33.7	243		116	74	112	73	111	73	108	72	79	78	34	26	32	34	
Riverside	Palm Springs	15	33.8	411	116.5	117	74	113	73	112	73	109	72	79	78	35	26	32	34	1109
Riverside	Pedley	10	34.0	718	117.5	105	70	101	69	99	68	95	66	74	72	34	26	33	36	
Riverside	Perris	10	33.8	1470	117.2	105	70	101	69	100	69	97	68	70	68	39	22	44	46	
Riverside	Rancho Mirage	15	33.8	248	116.4	117	74	113	73	112	73	109	72	79	78	33	26	31	34	
Riverside	Riverside Exp Sta	10	34.0	986	117.4	106	71	102	69	101	69	97	67	75	72	36	29	30	33	
Riverside	Riverside FS 3	10	34.0	840	117.4	104	70	100	69	99	68	95	65	75	72	37	27	34	36	1818
Riverside	Rubidoux	10	34.0	792	117.0	106	71	102	70	101	70	97	68	75	73	36	27	32	35	
Riverside	San Jacinto	10	33.8	1535	117.0	110	70	105	69	104	69	102	68	66	64	41	20	25	28	2376
Riverside	Sun City	10	33.7	1420	117.2	105	70	101	69	100	69	97	68	73	70	39	22	29	32	
Riverside	Temecula	10	33.5	1006	117.2	101	69	96	68	95	68	91	67	73	71	34	24	29	32	
Riverside	Thermal AP	15	33.6	-112	116.1	114	74	110	74	109	74	106	74	64	62	29	26	-11	-4	1154
Riverside	Valle Vista	10	33.8	1655	116.9	109	70	104	69	103	69	101	67	74	72	40	20	25	28	
Riverside	Woodcrest	10	33.9	1500	117.4	104	70	100	69	99	68	95	65	74	72	37	27	32	35	
Riversie	Wildomar	10	33.6	1255	117.3	103	70	99	69	98	69	94	68	74	72	36	23	28	30	
Sacramento	Arden	12	38.5	80		104	70	100	69	98	69	94	67	73	71	35	28	33	35	
Sacramento	Brannan Island	12	38.1	30	121.7	100	69	95	68	93	68	89	67	72	70	10	24	28	31	

						Cooling											Heating			
						0.1%		0.5%		1.0%		2.0%								
County	City	Climate Zone	Latitude	Elevation (ft)	Longitude	DB	MCWB	DB	MCWB	DB	MCWB	DB	MCWB	Design Wetbulb 0.1%	Design Wetbulb 0.5%	Outdoor Daily Range	Winter Median of Extremes	Design Drybulb (0.2%)	Design Drybulb (0.6%)	HDD*
Sacramento	Carmichael	12	38.6	100	121.5	104	70	100	69	98	69	94	68	73	71	35	25	35	37	
Sacramento	Citrus Heights	12	38.7	138	121.5	104	71	100	70	98	70	94	68	74	72	36	24	26	29	
Sacramento	Elk Grove	12	38.4	50	121.4	104	71	100	69	98	69	94	68	73	71	35	29	34	36	
Sacramento	Fair Oaks	12	38.7	50	121.3	104	70	100	69	98	69	94	69	72	71	36	23	29	33	
Sacramento	Florin	12	38.5	100	121.4	104	71	100	69	98	69	94	68	73	71	35	29	34	36	
Sacramento	Folsom Dam	12	38.7	350	121.2	104	70	101	69	99	69	95	67	73	71	36	25	34	36	
Sacramento	Foothill Farms	12	38.6	90	121.3	104	71	100	70	98	70	94	68	73	71	36	24	30	34	
Sacramento	Galt	12	38.2	40	121.3	101	70	97	68	95	68	91	67	72	70	38	23	28	31	
Sacramento	La Riviera	12	38.6	190		104	71	100	70	98	70	94	68	73	71	32	30	35	37	
Sacramento	Mather AFB	12	38.6	96	121.3	104	71	100	70	98	70	94	68	74	72	35	28	32	35	
Sacramento	McClellan AFB	12	38.7	86	121.4	105	71	102	70	100	70	96	68	72	70	35	23	38	41	2566
Sacramento	North Highlands	12	38.6	45	121.4	104	71	100	69	98	69	94	67	69	67	35	23	22	26	2566
Sacramento	Orangevale	12	38.7	140	121.2	105	72	102	70	100	70	96	68	74	71	36	24	30	34	
Sacramento	Parkway-South Sacramento	12	38.5	17		104	71	100	70	98	70	94	68	73	71	32	30	35	37	
Sacramento	Rancho Cordova	12	38.6	190	121.3	104	72	100	69	98	69	94	68	74	71	35	26	31	33	
Sacramento	Rio Linda	12	38.6	86	121.5	104	72	100	70	98	70	94	68	74	71	32	28	33	35	
Sacramento	Rosemont	12	38.3	190	121.4	104	71	100	70	98	70	94	68	73	71	32	30	35	37	
Sacramento	Sacramento AP	12	38.5	17	121.5	104	72	100	70	98	70	94	68	75	73	35	26	32	35	2843
Sacramento	Sacramento CO	12	38.6	84	121.5	104	71	100	70	98	70	94	68	74	71	32	30	31	33	
Sacramento	Walnut Grove	12	38.2	23	121.5	102	70	98	69	96	69	92	68	71	69	37	24	29	31	
San Benito	Hollister	4	36.9	280	121.4	96	68	89	67	87	67	81	65	68	66	30	21	35	37	2725
San Benito	Idria	4	36.4	2650	120.7	97	66	92	65	91	64	87	62	72	71	27	24	30	32	3128
San Berardino	Mitchell Caverns	14	34.9	4350		102	64	98	63	97	63	94	61	71	67	29	21	37	40	
San Bernadino	Redlands	10	34.1	1318	117.2	106	70	102	69	101	69	98	67	72	70	34	27	31	34	1993
San Bernardino	Adelanto	14	34.6	2865	117.4	105	67	101	65	100	64	97	62	70	68	39	14	24	27	
San Bernardino	Apple Valley	14	34.5	2935	117.2	105	66	101	65	100	65	97	64	70	68	38	14	21	25	
San Bernardino	Baker	14	35.3	940	116.1	115	73	112	72	111	72	108	70	74	72	29	23	36	38	
San Bernardino	Balch PH	14	36.9	1720		100	67	97	66	96	66	93	64	74	72	26	26	31	35	
San Bernardino	Barstow	14	34.9	2162	117.0	107	69	104	69	103	69	100	67	73	71	35	16	26	28	2580

						Cooling											Heating			
						0.1%		0.5%		1.0%		2.0%								
County	City	Climate Zone	Latitude	Elevation (ft)	Longitude	DB	MCWB	DB	MCWB	DB	MCWB	DB	MCWB	Design Wetbulb 0.1%	Design Wetbulb 0.5%	Outdoor Daily Range	Winter Median of Extremes	Design Drybulb (0.2%)	Design Drybulb (0.6%)	HDD*
San Bernardino	Big Bear Lake	16	34.2	6745	116.9	87	59	83	58	82	58	79	56	70	68	32	-3	25	28	6850
San Bernardino	Bloomington	10	34.0	980	117.4	106	71	102	70	101	70	98	69	75	73	34	30	35	38	
San Bernardino	Chino	10	34.0	714	117.7	104	70	100	69	98	69	94	68	72	70	35	27	31	34	
San Bernardino	Chino Hills	10	34.1	800	117.7	104	70	100	69	98	69	94	68	74	72	35	27	32	35	
San Bernardino	Colton	10	34.1	978	117.3	105	70	102	68	101	68	97	67	74	72	35	28	33	35	
San Bernardino	Crestline	16	34.2	4900	117.3	90	62	86	61	85	61	81	59	66	64	26	13	20	24	
San Bernardino	Cucamonga	10	34.1	1450	117.6	103	69	99	68	97	67	93	65	66	64	31	29	20	24	
San Bernardino	Daggett AP	14	34.9	1915	116.8	109	68	106	68	105	68	102	66	72	70	33	21	35	38	2203
San Bernardino	El Mirage	14	34.6	2910	117.6	105	69	101	68	100	68	97	66	72	71	31	9	30	34	
San Bernardino	Fontana	10	34.1	1090	117.4	105	70	101	69	100	69	97	67	72	71	33	30	31	35	1530
San Bernardino	George AFB	14	34.6	2875	117.4	105	67	102	65	101	64	98	62	71	69	31	19	37	39	2887
San Bernardino	Grand Terrace	10	34.1	1000	117.3	105	70	102	68	101	68	97	67	74	72	35	28	33	36	
San Bernardino	Hesperia	14	34.4	3191	117.3	105	67	101	65	100	65	97	63	70	68	38	14	21	25	
San Bernardino	Highland	10	34.1	1315	117.2	106	70	102	69	101	69	97	68	74	72	36	26	31	34	
San Bernardino	Lake Arrowhead	16	34.2	5205	117.2	90	62	86	61	85	61	81	59	71	67	26	13	37	40	5310
San Bernardino	Loma Linda	10	34.0	1150	117.5	106	70	103	69	102	69	99	67	74	72	36	27	32	35	
San Bernardino	Los Serranos	10	34.1	714	117.7	104	70	100	69	98	69	94	68	74	72	35	27	32	35	
San Bernardino	Lucerne Valley	14	34.5	2957	117.0	105	67	101	66	100	66	98	64	64	62	38	12	35	37	
San Bernardino	Mentone	10	34.1	1700	117.1	106	70	102	69	101	69	98	67	74	72	34	27	32	35	
San Bernardino	Montclair	10	34.0	1220	117.0	104	69	100	68	98	68	94	66	73	71	35	28	33	35	
San Bernardino	Mount Baldy Notch	16	34.3	7735	117.6	80	58	76	57	75	56	71	54	61	59	32	4	10	14	
San Bernardino	Mountain Pass	14	35.5	4730	115.5	100	65	96	64	95	64	92	63	66	64	29	11	22	26	
San Bernardino	Muscoy	10	34.2	1400	117.3	105	71	101	69	100	68	96	66	75	72	37	26	31	34	
San Bernardino	Needles AP	15	34.8	913	114.6	117	73	114	72	113	72	110	71	71	69	26	27	40	42	1391
San Bernardino	Ontario AP	10	34.0	934	117.0	105	70	101	69	99	68	95	66	74	72	34	26	32	35	1710
San Bernardino	Parker Res	15	34.3	738	114.2	115	74	112	73	111	73	108	72	72	70	26	32	37	40	1223
San Bernardino	Pinnacles NM	14	36.5	1307	121.2	98	68	94	67	93	66	89	64	70	68	45	20	33	36	2956
San Bernardino	Rialto	10	34.1	1254	117.0	105	70	101	69	100	68	96	66	74	72	35	28	33	35	
San Bernardino	San Bernardino	10	34.1	1125	117.3	106	70	102	69	101	69	98	68	66	64	39	27	25	28	1777

						Cooling											Heating			
						0.1%		0.5%		1.0%		2.0%								
County	City	Climate Zone	Latitude	Elevation (ft)	Longitude	DB	MCWB	DB	MCWB	DB	MCWB	DB	MCWB	Design Wetbulb 0.1%	Design Wetbulb 0.5%	Outdoor Daily Range	Winter Median of Extremes	Design Drybulb (0.2%)	Design Drybulb (0.6%)	HDD*
San Bernardino	Squirrel Inn	14	34.2	5680	117.2	86	61	82	60	81	60	77	58	65	63	23	12	18	22	5175
San Bernardino	Trona	14	35.8	1695	117.4	113	72	109	70	108	70	105	68	68	66	35	18	24	28	2415
San Bernardino	Twentynine Palms	14	34.1	1975	116.1	110	71	107	70	106	70	103	69	73	71	31	21	31	34	1973
San Bernardino	Upland	10	34.1	1605	117.7	102	69	98	68	96	68	92	66	69	67	31	29	30	33	2175
San Bernardino	Victorville Pumps	14	34.5	2858		105	67	101	65	100	64	97	62	70	68	39	14	34	36	3191
San Bernardino	Yucaipa	10	34.0	2600	117.0	106	68	102	67	101	67	98	65	73	71	35	27	32	35	
San Bernardino	Yucca Valley	14	34.2	2600	116.4	108	71	105	70	104	70	101	69	75	73	32	19	24	27	
San Bernardino/Kern	China Lake	14	35.7	2220	117.7	112	70	108	68	107	68	104	68	72	70	33	15	31	34	2560
San Diego	Alpine	10	32.8	1735	116.8	99	69	95	68	94	68	91	67	71	69	35	27	40	42	
San Diego	Barrett Dam	10	32.7	1623	116.7	103	69	97	68	96	68	92	67	73	71	35	22	26	30	2656
San Diego	Borrego Desert PK	15	33.2	805	116.4	112	76	107	74	105	74	101	72	73	71	36	25	23	26	
San Diego	Bostonia	10	32.8	600	116.9	96	70	91	69	88	69	81	67	72	70	30	29	34	36	
San Diego	Cabrillo NM	7	32.7	410	117.2	89	69	84	68	83	68	80	67	71	69	12	39	43	45	
San Diego	Camp Pendleton	10	33.4	50	117.4	88	69	85	68	84	68	80	67	71	69	12	34	38	40	
San Diego	Campo	14	32.6	2630	116.5	101	67	95	66	94	66	90	66	71	68	41	16	33	36	3303
San Diego	Cardiff-by-the-Sea	7	33.0	80	117.3	87	68	83	67	81	67	77	65	70	68	12	35	39	41	
San Diego	Carlsbad	7	33.2	44	117.4	87	68	83	67	81	67	77	65	70	68	10	34	38	40	
San Diego	Casa de Oro-Mount Helix	10	32.7	530		96	71	88	69	87	69	84	67	71	69	19	34	38	40	
San Diego	Chula Vista	7	32.6	9	117.1	90	70	84	68	83	68	79	66	74	72	9	33	28	31	2072
San Diego	Coronado	7	32.7	20	117.2	89	69	82	67	80	67	76	65	73	71	10	36	28	31	1500
San Diego	Cuyamaca	7	33.0	4650	116.6	92	64	85	62	84	61	81	59	72	70	29	11	20	24	4848
San Diego	El Cajon	10	32.7	525	117.0	96	70	91	69	90	69	87	67	72	70	30	29	34	36	
San Diego	El Capitan Dam	14	32.9	600	116.8	105	71	98	70	97	70	93	68	72	70	35	29	34	36	1533
San Diego	Encinitas	7	33.0	50	117.3	87	68	83	67	81	67	77	65	70	68	10	35	39	41	
San Diego	Escondido	10	33.1	660	117.1	97	69	90	68	88	68	84	67	72	70	29	26	31	34	2005
San Diego	Fallbrook	10	33.6	660	117.3	94	68	89	67	88	67	85	66	70	68	29	26	18	23	2077
San Diego	Fort MacArthur	7	33.7	200	118.3	92	69	84	68	82	68	78	66	67	65	13	35	13	18	1819
San Diego	Grossmont	7	32.7	530	117.0	96	69	89	68	88	68	84	66	71	69	23	31	36	38	

						Cooling											Heating			
						0.1%		0.5%		1.0%		2.0%								
County	City	Climate Zone	Latitude	Elevation (ft)	Longitude	DB	MCWB	DB	MCWB	DB	MCWB	DB	MCWB	Design Wetbulb 0.1%	Design Wetbulb 0.5%	Outdoor Daily Range	Winter Median of Extremes	Design Drybulb (0.2%)	Design Drybulb (0.6%)	HDD*
San Diego	Henshaw Dam	10	33.2	2700		99	68	94	67	93	67	90	66	74	72	38	15	25	28	3708
San Diego	Imperial Beach	7	32.5	23	117.1	87	69	82	68	81	68	78	67	81	79	10	35	31	34	1839
San Diego	Julian Wynola	14	33.1	3650	116.8	96	66	91	64	90	64	87	62	72	70	39	20	37	39	4049
San Diego	La Mesa	7	32.8	530	117.0	94	70	88	69	87	69	84	67	72	70	23	34	35	37	1567
San Diego	Lakeside	10	32.8	690	117.0	95	69	90	68	89	68	86	66	72	70	20	26	31	34	
San Diego	Lemon Grove	7	32.7	437	117.2	96	71	88	69	87	69	84	67	72	70	19	34	38	41	
San Diego	Miramar AFS	7	32.9	477	117.1	97	69	91	68	90	68	86	67	74	72	22	32	33	36	1532
San Diego	National City	7	32.7	34	117.0	87	70	82	68	81	68	78	66	71	69	10	36	40	42	
San Diego	Oceanside	7	33.2	10	117.4	84	69	80	67	78	67	74	65	67	65	10	33	34	37	
San Diego	Otay-Castle Pk	7	32.6	500	117.0	87	68	81	66	79	65	74	63	69	67	10	33	38	40	
San Diego	Palomar Obsy	14	33.4	5545	116.9	90	62	85	61	84	61	80	59	68	66	22	16	31	34	4141
San Diego	Pendleton MCB	7	33.3	63	117.3	92	68	87	67	85	67	81	66	74	72	22	34	33	36	1532
San Diego	Pendleton MCB Coast	7	33.2	24	117.4	84	69	80	67	79	67	75	65	71	69	10	39	39	41	1782
San Diego	Poway Valley	10	33.0	500	117.0	100	70	94	69	93	69	89	68	73	71	26	29	33	35	
San Diego	Ramona Spaulding	10	33.1	1480	116.8	103	70	97	69	96	69	92	68	68	66	40	22	6	13	
San Diego	Rancho Bernardo	10	33.0	500	117.1	96	69	91	68	89	68	85	67	72	70	26	29	34	36	
San Diego	Rancho San Diego	10	32.8	300		94	69	86	68	85	68	82	66	71	69	30	34	38	41	
San Diego	San Diego AP	7	32.7	13	117.2	88	70	83	69	82	69	78	68	66	64	13	38	25	28	1507
San Diego	San Marcos	10	33.1	567	117.2	97	69	98	68	94	68	84	67	72	70	29	26	31	34	
San Diego	Santee	10	32.8	400	117.0	96	69	91	68	90	68	87	67	72	70	20	25	30	33	
San Diego	Solana Beach	7	33.0	15	117.3	87	68	83	67	81	67	77	65	70	68	10	35	39	41	
San Diego	Spring Valley	10	32.7	300	117.0	94	69	86	68	85	68	82	66	71	69	30	34	38	41	
San Diego	Vista	7	33.2	510	117.2	96	69	90	68	89	68	85	67	73	72	16	30	30	33	
San Diego	Warner Springs	14	33.3	3180	116.6	100	67	95	66	94	66	91	65	71	69	40	15	42	44	3591
San Francisco	San Francisco AP	3	37.6	8	122.4	89	66	83	64	80	63	74	61	66	64	20	31	25	28	3042
San Francisco	San Francisco CO	3	37.8	52	122.4	84	65	79	63	77	62	71	60	66	64	14	38	25	28	3080
San Joaquin	Calaveras Big Trees	12	38.3	4696	120.3	92	61	88	60	87	60	84	58	73	71	33	11	30	33	5848
San Joaquin	Country Club	12	37.8	600		102	69	97	68	96	68	92	66	72	70	30	68	28	31	
San Joaquin	Garden Acres	12	38.0	20		103	71	98	69	97	69	93	67	73	71	35	24	28	30	

						Cooling											Heating			
						0.1%		0.5%		1.0%		2.0%								
County	City	Climate Zone	Latitude	Elevation (ft)	Longitude	DB	MCWB	DB	MCWB	DB	MCWB	DB	MCWB	Design Wetbulb 0.1%	Design Wetbulb 0.5%	Outdoor Daily Range	Winter Median of Extremes	Design Drybulb (0.2%)	Design Drybulb (0.6%)	HDD*
San Joaquin	Lathrop	12	37.8	22	121.3	103	71	98	69	97	69	93	67	73	71	35	24	28	30	
San Joaquin	Lincoln Village	12	38.0	12	121.3	101	70	96	68	95	68	91	67	72	70	37	24	28	30	
San Joaquin	Lodi	12	38.1	40	121.3	101	70	97	68	95	68	91	67	60	58	38	23	1	7	2859
San Joaquin	Manteca	12	37.8	34	121.2	102	70	97	68	95	68	91	67	71	69	37	24	42	45	
San Joaquin	Ripon	12	37.7	61	121.1	102	70	97	68	95	68	91	67	72	70	37	23	30	33	
San Joaquin	Stockton AP	12	37.9	22	121.3	103	71	98	69	97	69	93	67	72	70	35	24	36	38	2806
San Joaquin	Stockton FS 4	12	38.0	12	121.3	101	70	96	68	95	68	91	67	73	71	37	24	28	30	2846
San Joaquin	Tracy Carbona	12	37.7	140		102	70	97	68	95	68	90	67	71	69	38	24	37	39	2704
San Joaquin	Tracy Pumps	12	37.8	61		104	71	99	69	97	69	92	68	72	70	39	23	29	32	
San Luis Obispo	Arroyo Grande	5	35.1	105	120.6	92	66	86	64	84	64	79	62	67	65	18	28	32	35	
San Luis Obispo	Atascadero	4	35.5	837	120.7	94	66	89	67	88	67	84	65	70	68	42	25	29	32	
San Luis Obispo	Baywood-Los Osos	5	35.3	100		88	65	82	64	80	64	76	62	67	65	14	31	36	38	
San Luis Obispo	Cambria AFS	5	35.5	690	121.1	78	62	72	61	70	61	66	59	71	69	16	30	32	35	3646
San Luis Obispo	El Paso de Robles	4	35.6	721		102	65	95	65	94	65	90	65	69	67	44	16	20	23	
San Luis Obispo	Grover City	5	35.1	100		93	69	86	64	84	64	80	62	67	65	18	30	34	37	
San Luis Obispo	Morro Bay FD	5	35.4	115	120.9	88	65	82	64	80	64	76	62	71	69	14	31	31	34	
San Luis Obispo	Nacimiento Dam	4	35.8	770	120.9	100	68	94	66	92	66	88	64	75	72	35	22	31	34	
San Luis Obispo	Nipomo	5	35.0	330	120.5	90	66	83	64	82	63	78	61	67	65	23	25	31	33	
San Luis Obispo	Oceano	5	35.1	20	120.6	93	69	86	64	84	64	80	62	67	65	18	30	34	37	
San Luis Obispo	Paso Robles AP	4	35.7	815	120.7	104	66	97	66	96	66	92	65	73	71	40	19	37	40	2973
San Luis Obispo	Paso Robles CO	4	35.6	700	120.7	102	65	95	65	94	65	90	65	70	68	44	16	23	26	2885
San Luis Obispo	Pismo Beach	5	35.1	80	120.6	92	66	85	64	84	64	80	62	69	67	16	30	35	38	2756
San Luis Obispo	Point Piedras Blancas	5	35.7	59	121.3	73	60	67	59	65	59	61	57	70	68	10	36	37	39	3841
San Luis Obispo	San Luis Obispo	5	35.3	320	120.7	94	63	87	63	85	63	81	62	66	64	26	30	25	28	2498
San Luis Obispo	Twitchell Dam	5	35.0	582	120.3	99	70	93	68	92	68	88	66	53	50	26	26	-2	4	
San Mateo	Atherton	3	37.5	50	122.2	90	66	84	64	82	64	78	62	68	66	27	23	29	33	
San Mateo	Belmont	3	37.5	33	122.3	90	66	84	64	82	64	78	62	68	66	24	29	34	36	
San Mateo	Burlingame	3	37.6	10	122.4	88	67	82	64	80	64	76	63	68	65	20	30	35	37	
San Mateo	Daly City	3	37.6	410	122.5	84	65	78	62	77	62	73	61	66	63	16	34	37	39	

						Cooling											Heating			
						0.1%		0.5%		1.0%		2.0%								
County	City	Climate Zone	Latitude	Elevation (ft)	Longitude	DB	MCWB	DB	MCWB	DB	MCWB	DB	MCWB	Design Wetbulb 0.1%	Design Wetbulb 0.5%	Outdoor Daily Range	Winter Median of Extremes	Design Drybulb (0.2%)	Design Drybulb (0.6%)	HDD*
San Mateo	East Palo Alto	3	37.5	25	122.1	93	66	85	64	83	64	77	62	68	66	25	26	31	34	
San Mateo	Foster City	3	37.5	20	122.7	92	67	84	65	82	65	76	63	68	66	22	29	34	36	
San Mateo	Half Moon Bay	3	37.5	60	122.4	83	64	76	62	74	61	69	59	68	66	15	32	22	26	3843
San Mateo	Hillsborough	3	37.6	352	122.3	90	66	82	65	80	65	74	64	68	66	23	30	35	37	
San Mateo	Menlo Park	3	37.4	65	122.3	94	67	86	65	84	65	78	63	69	67	25	27	32	0	
San Mateo	Millbrae	3	37.6	10	122.4	90	66	82	63	80	63	74	61	70	68	24	30	33	35	
San Mateo	Pacifica	3	37.6	13	122.0	87	65	79	62	77	62	71	60	66	64	16	31	35	37	
San Mateo	Redwood City	3	37.5	31	122.2	90	67	86	66	85	66	81	64	71	69	28	28	42	44	2599
San Mateo	San Bruno	3	37.7	20	122.4	86	66	80	64	78	64	73	62	66	64	23	30	25	28	3042
San Mateo	San Carlos	3	37.5	26	122.3	92	67	88	65	86	65	82	63	66	64	28	28	25	28	
San Mateo	San Gregorio 2 SE	3	37.3	275		87	66	81	63	79	63	74	61	66	64	30	27	25	28	
San Mateo	San Mateo	3	37.5	21	122.3	92	67	84	65	82	65	76	63	72	70	24	31	31	34	2655
San Mateo	South San Francisco	3	37.7	10	122.4	87	67	81	64	78	64	72	62	68	65	20	32	36	38	
San Mateo	Woodside	3	37.5	75	122.3	92	67	84	66	82	65	76	63	69	67	24	22	28	31	
Santa Barbara	Cachuma Lake	5	34.6	781	120.0	97	69	92	67	91	67	87	65	71	69	19	26	43	45	
Santa Barbara	Carpinteria	6	34.4	385	119.5	90	69	83	67	81	67	77	65	70	68	15	30	34	37	
Santa Barbara	Cuyama	4	34.9	2255	116.6	99	68	96	67	94	67	89	66	70	68	42	13	33	36	
Santa Barbara	Guadalupe	5	35.0	85	120.6	92	66	86	64	84	64	79	62	67	65	18	28	32	35	
Santa Barbara	Isla Vista	6	34.5	40	119.9	90	69	83	67	81	67	77	65	70	68	20	33	38	40	
Santa Barbara	Lompoc	5	34.9	95	120.5	84	63	77	62	76	62	72	60	71	69	18	26	38	40	2888
Santa Barbara	Point Arguello	5	34.6	76	120.7	75	64	71	63	69	62	65	59	63	61	17	29	32	34	3826
Santa Barbara	Santa Barbara AP	6	34.4	9	119.8	90	69	83	67	81	67	77	65	70	68	20	29	29	32	2487
Santa Barbara	Santa Barbara CO	6	34.4	5	119.7	91	69	84	67	82	67	78	65	70	68	22	33	29	32	1994
Santa Barbara	Santa Maria AP	5	34.9	236	120.5	90	66	83	64	82	63	78	61	74	72	23	25	35	37	3053
Santa Barbara	Vandenburg AFB	5	34.7	368	122.8	85	62	77	61	75	61	71	60	74	71	16	30	33	39	3451
Santa Clara	Almaden AFS	3	37.2	3470	121.9	95	62	90	60	89	60	85	59	71	69	20	20	33	36	4468
Santa Clara	Alum Rock	4	37.4	70	121.8	95	68	90	66	88	66	84	64	70	68	22	28	33	36	
Santa Clara	Campbell	4	37.3	195	121.8	93	69	88	66	87	66	83	65	71	68	30	28	33	36	
Santa Clara	Cupertino	4	37.3	70	122.0	96	68	88	67	86	66	80	64	70	68	30	28	33	36	

						Cooling											Heating			
						0.1%		0.5%		1.0%		2.0%								
County	City	Climate Zone	Latitude	Elevation (ft)	Longitude	DB	MCWB	DB	MCWB	DB	MCWB	DB	MCWB	Design Wetbulb 0.1%	Design Wetbulb 0.5%	Outdoor Daily Range	Winter Median of Extremes	Design Drybulb (0.2%)	Design Drybulb (0.6%)	HDD*
Santa Clara	Gilroy	4	37.0	194	121.6	101	70	93	68	91	67	86	65	73	71	25	23	29	32	
Santa Clara	Los Altos	4	37.3	163	122.0	96	68	88	65	86	64	80	62	70	68	26	28	33	35	
Santa Clara	Los Altos Hills	4	37.3	183	122.1	93	67	85	64	83	64	77	63	68	66	25	28	33	35	
Santa Clara	Los Gatos	4	37.2	365	122.0	98	69	90	67	88	67	82	66	72	70	32	26	29	31	2741
Santa Clara	Milpitas	4	37.4	15	121.9	94	68	87	65	85	65	79	63	70	67	27	27	32	35	
Santa Clara	Moffett Field NAS	4	37.4	39	122.1	89	68	84	66	82	66	78	64	75	72	23	30	30	33	2511
Santa Clara	Morgan Hill	4	37.1	350	120.0	100	69	92	68	90	68	85	66	71	69	25	26	31	34	
Santa Clara	Mount Hamilton	4	37.3	4206	121.7	95	59	88	58	86	58	81	56	70	68	18	18	32	35	4724
Santa Clara	Mountain View	4	37.5	95	121.9	93	67	85	64	83	64	77	62	68	66	25	28	33	35	
Santa Clara	Palo Alto	4	37.5	25	122.1	93	66	85	64	83	64	77	62	71	69	25	26	21	25	2891
Santa Clara	San Jose	4	37.4	67	121.9	94	68	86	66	84	66	78	64	66	64	26	29	25	28	2438
Santa Clara	Santa Clara Univ	4	37.4	88	121.9	90	67	87	65	86	65	82	63	70	68	30	29	29	32	2566
Santa Clara	Saratoga	4	37.3	500	122.0	96	67	88	66	86	66	80	65	70	68	31	27	32	35	
Santa Clara	Stanford	4	37.5	23		93	66	85	64	83	64	77	62	68	66	25	26	31	34	
Santa Clara	Sunnyvale	4	37.3	97	122.0	96	68	88	66	86	66	80	64	74	72	26	29	33	36	2511
Santa Cruz	Aptos	3	37.0	500	121.9	94	67	88	66	87	65	83	63	69	67	30	27	32	35	
Santa Cruz	Ben Lomond	3	37.1	450	122.1	92	67	85	66	83	65	79	63	68	66	30	25	34	36	
Santa Cruz	Boulder Creek	3	37.2	493	122.1	92	67	85	65	83	65	79	63	69	67	30	25	30	33	
Santa Cruz	Capitola	3	37.0	64	122.0	94	67	88	66	86	65	81	63	69	67	24	27	32	35	
Santa Cruz	Felton	3	37.0	100	122.1	94	68	88	66	86	66	81	64	69	67	28	27	32	35	
Santa Cruz	Freedom	3	37.0	1495	121.8	89	67	85	64	83	64	79	62	68	65	22	27	32	34	
Santa Cruz	Opal Cliffs	3	37.0	125	122.0	94	68	88	66	86	66	81	64	69	67	28	27	32	35	
Santa Cruz	Rio Del Mar	3	37.0	50	121.9	94	67	88	66	87	65	83	63	69	67	30	27	32	35	
Santa Cruz	Santa Cruz	3	37.0	125	122.0	94	68	88	66	86	66	81	64	74	72	28	27	35	37	3136
Santa Cruz	Scotts Valley	3	37.0	400	122.0	94	68	88	66	86	66	81	64	69	67	28	27	32	35	
Santa Cruz	Soquel	3	37.0	50	122.0	94	67	88	66	86	65	81	63	69	67	24	27	32	35	
Santa Cruz	Watsonville	3	36.9	95	121.8	86	66	82	64	81	63	79	61	74	72	22	28	28	31	3418
Shasta	Anderson	11	40.5	430	122.3	107	71	103	70	101	70	97	68	72	70	30	26	31	34	
Shasta	Burney	16	40.9	3127	121.7	95	64	92	63	91	63	88	61	68	65	42	0	35	37	6404

						Cooling											Heating			
						0.1%		0.5%		1.0%		2.0%								
County	City	Climate Zone	Latitude	Elevation (ft)	Longitude	DB	MCWB	DB	MCWB	DB	MCWB	DB	MCWB	Design Wetbulb 0.1%	Design Wetbulb 0.5%	Outdoor Daily Range	Winter Median of Extremes	Design Drybulb (0.2%)	Design Drybulb (0.6%)	HDD*
Shasta	Enterprise	11	40.6	470	122.3	107	69	103	68	101	68	97	67	72	70	29	26	31	34	
Shasta	Hat Creek PH 1	16	40.9	3015	121.6	99	65	96	64	95	64	91	62	69	67	48	2	24	27	5689
Shasta	Iron Mtn	11	34.1	922	115.1	116	75	112	74	111	74	108	73	69	67	26	29	30	33	1251
Shasta	Manzanita Lake	16	40.5	5850	121.6	87	58	84	57	83	57	79	55	72	70	34	-3	29	32	7617
Shasta	Platina	11	40.4	2260	122.9	96	65	92	64	91	63	87	61	69	67	36	13	28	31	
Shasta	Redding FS 4	11	40.6	470	122.4	107	69	103	68	101	68	97	67	73	71	30	26	29	31	2544
Shasta	Shasta Dam	16	40.7	1076	122.4	105	69	101	68	99	68	95	67	74	72	27	29	29	32	2943
Shasta	Whiskeytown Res	11	40.6	1295	122.6	105	69	101	68	100	68	96	67	72	70	31	25	41	44	
Sierra	Downieville RS	16	39.6	2895	120.8	98	64	95	63	94	63	90	61	73	71	42	13	37	39	
Sierra	Sierra City	16	39.6	4230	120.1	96	62	93	61	92	61	89	59	74	71	43	12	34	37	
Sierra	Sierraville RS	16	39.6	4975	120.4	94	60	91	59	90	59	86	57	73	71	44	-10	37	39	6893
Siskiyou	Callahan	16	41.3	3185	122.8	97	63	93	62	92	62	88	60	72	70	35	7	17	22	
Siskiyou	Cecilville	16	41.1	3000	123.1	95	63	89	62	88	61	84	59	72	70	44	13	27	30	
Siskiyou	Fort Jones RS	16	41.6	2725	122.9	98	64	93	63	92	63	88	61	62	61	44	5	34	37	5590
Siskiyou	Happy Camp RS	16	41.8	1150	123.4	103	67	97	66	96	66	92	65	73	71	41	18	28	31	4263
Siskiyou	Hilt	16	42.0	2900	122.6	97	64	93	62	92	62	89	60	68	66	39	5	35	37	
Siskiyou	Lava Beds	16	41.7	4770	121.5	93	59	89	58	88	58	84	56	73	71	41	-1	28	30	
Siskiyou	McCloud	16	41.3	3300	122.1	96	63	93	62	91	62	87	60	74	71	42	5	28	31	5990
Siskiyou	Montague	16	41.8	2648	122.5	99	66	95	65	94	65	90	63	73	71	39	3	38	41	5474
Siskiyou	Mount Hebron RS	16	41.8	4250	122.0	92	60	88	59	86	59	82	57	63	61	42	-10	24	27	
Siskiyou	Mount Shasta	16	41.3	3535	122.3	93	62	89	61	88	61	84	59	61	59	34	8	4	11	5890
Siskiyou	Sawyer's Bar RS	16	41.3	2169		100	66	95	65	93	64	88	62	67	65	38	14	34	36	4102
Siskiyou	Tulelake	16	42.0	4035	121.5	92	60	88	59	87	59	83	57	74	72	41	-5	30	34	6854
Siskiyou	Weed FD	16	41.4	3590	122.4	92	63	89	62	88	61	84	59	69	67	35	4	17	22	
Siskiyou	Yreka	16	41.7	2625	122.6	99	66	95	65	94	65	90	64	67	65	39	8	18	23	5395
Solano	Benicia	12	38.1	55	122.1	99	69	93	67	91	67	87	65	70	68	30	28	33	36	
Solano	Dixon	12	38.4	100	121.9	104	72	99	70	97	70	93	68	71	68	36	24	32	35	2826
Solano	Fairfield FS	12	38.3	38	122.0	103	69	98	68	96	68	91	66	71	68	34	24	31	34	2686
Solano	Gillespie Field	12	32.8	385		98	71	91	70	89	70	85	68	60	58	30	24	13	18	

						Cooling											Heating			
						0.1%		0.5%		1.0%		2.0%								
County	City	Climate Zone	Latitude	Elevation (ft)	Longitude	DB	MCWB	DB	MCWB	DB	MCWB	DB	MCWB	Design Wetbulb 0.1%	Design Wetbulb 0.5%	Outdoor Daily Range	Winter Median of Extremes	Design Drybulb (0.2%)	Design Drybulb (0.6%)	HDD*
Solano	Monticello Dam	2	38.5	505	122.1	105	71	100	70	98	70	94	68	73	71	39	26	31	34	
Solano	Suisun City	12	38.2	72	122.0	103	71	98	69	96	68	91	66	73	70	35	24	29	32	
Solano	Vacaville	12	38.4	105	122.0	103	71	100	70	98	70	94	68	69	67	40	23	33	35	2788
Solano	Vallejo	3	38.1	85	122.3	93	67	90	66	88	66	84	64	70	68	23	28	33	36	
Sonoma	Boyes Hot Sprgs	2	38.2	300	122.5	100	70	95	69	93	69	89	67	63	60	40	22	17	22	
Sonoma	Cloverdale	2	38.8	320	123.0	102	70	97	69	95	68	89	66	71	68	37	26	32	35	2763
Sonoma	Cotati	2	38.3	100	122.7	99	69	94	68	93	68	89	66	71	69	32	24	28	30	
Sonoma	Fort Ross	1	38.5	116	123.3	79	63	74	62	71	61	65	59	67	64	19	30	29	32	4127
Sonoma	Graton	2	38.4	200	122.9	95	68	91	67	88	66	82	64	69	67	34	22	25	28	3409
Sonoma	Healdsburg	2	38.6	102	122.9	102	69	95	68	94	68	90	66	68	66	37	26	31	34	2572
Sonoma	Larksfield-Wikiup	2	38.5	170		99	69	96	68	95	68	92	66	71	69	35	24	27	29	
Sonoma	Lucas Vly-Marinwood	2	38.3	20		79	63	74	62	71	61	65	59	64	62	12	30	35	37	
Sonoma	Petaluma FS 2	2	38.2	16	122.6	98	69	92	67	90	67	85	66	74	72	31	24	27	30	2959
Sonoma	Rohnert Park	2	38.4	106	122.6	99	69	96	68	95	68	92	66	71	69	33	24	27	29	
Sonoma	Roseland	2	38.4	167	122.7	99	69	96	68	95	68	92	66	71	69	35	24	27	29	
Sonoma	Santa Rosa	2	38.5	167	122.8	99	69	96	68	95	68	92	66	73	71	35	24	33	35	2980
Sonoma	Sausalito	3	37.9	10		85	66	80	65	78	65	73	63	67	65	12	30	34	36	
Sonoma	Sebastapol	2	38.4	102		99	69	96	68	95	68	92	66	71	69	35	24	27	29	
Sonoma	Sonoma	2	38.3	70	122.5	101	70	96	69	94	69	90	67	70	67	40	22	29	32	2998
Sonoma	Travis AFB	12	38.3	72	121.9	103	71	98	69	96	68	91	66	73	71	35	24	28	31	2725
Sonoma	Windsor	2	38.5	130		99	69	96	68	95	68	92	66	71	69	35	24	27	29	
Stanislaus	Ceres	12	37.6	90	121.0	101	72	96	70	94	69	90	67	65	63	36	24	6	13	
Stanislaus	Crows Landing	12	37.4	140	121.1	101	70	96	68	94	68	89	66	66	64	33	23	20	24	2767
Stanislaus	Denair	12	37.6	137	120.8	100	70	95	69	93	69	89	67	74	72	38	22	25	28	2974
Stanislaus	Knights Ferry	12	37.8	315	120.6	103	70	99	68	98	68	94	67	64	61	37	19	31	33	
Stanislaus	Modesto	12	37.6	91	121.0	102	73	99	70	98	70	95	68	69	67	36	25	27	30	2671
Stanislaus	Newman	12	37.3	90	121.1	104	71	99	69	97	69	93	67	73	71	38	22	33	36	
Stanislaus	Oakdale	12	37.8	215	120.9	102	71	99	69	97	69	93	67	73	71	37	22	28	32	
Stanislaus	Patterson	12	37.4	97	121.1	101	72	96	70	94	69	90	67	74	72	36	24	30	34	

						Cooling											Heating			
						0.1%		0.5%		1.0%		2.0%								
County	City	Climate Zone	Latitude	Elevation (ft)	Longitude	DB	MCWB	DB	MCWB	DB	MCWB	DB	MCWB	Design Wetbulb 0.1%	Design Wetbulb 0.5%	Outdoor Daily Range	Winter Median of Extremes	Design Drybulb (0.2%)	Design Drybulb (0.6%)	HDD*
Stanislaus	Riverbank	12	37.7	133	120.9	102	73	99	70	98	70	95	68	75	72	36	25	30	33	
Stanislaus	Turlock	12	37.5	100	120.9	104	72	100	70	99	70	95	68	74	72	40	24	30	34	
Sutter	Live Oak	11	39.2	75	121.7	105	70	102	69	101	69	97	69	73	71	36	24	29	32	
Sutter	South Yuba City	11	39.1	59		105	69	101	69	100	69	96	68	72	71	36	24	29	32	
Sutter	Yuba City	11	39.1	70	121.6	105	69	101	69	100	69	96	68	72	71	36	24	29	32	
Tehama	Corning	11	39.9	487	122.2	106	71	103	70	102	69	98	67	73	71	33	23	28	31	
Tehama	Mill Creek	16	35.1	2940	117.0	102	67	97	66	96	66	94	65	70	68	28	28	33	36	
Tehama	Mineral	16	40.4	4911	121.6	90	60	87	59	86	59	82	57	70	67	38	2	32	35	7257
Tehama	Red Bluff AP	11	40.2	342	122.3	107	70	104	69	102	68	98	66	70	68	31	24	25	28	2688
Trinity	Big Bar RS	16	40.8	1260	121.8	102	68	98	67	97	67	93	65	71	69	46	19	43	46	
Trinity	Forest Glen	16	40.4	2340	123.3	96	65	92	64	91	64	88	62	73	71	42	12	30	34	
Trinity	Salyer RS	16	40.9	623	123.6	102	69	95	67	93	66	87	64	66	64	33	22	25	28	
Trinity	Trinity Dam	16	40.8	2500	122.8	99	65	94	64	92	64	88	62	73	70	37	17	29	32	
Trinity	Weaverville RS	16	40.7	2050	122.9	100	67	95	66	93	65	89	63	68	65	46	10	33	35	4992
Tulare	Ash Mtn	13	36.5	1708	118.8	105	69	101	68	100	68	97	66	74	72	30	25	29	32	2703
Tulare	Dinuba	13	36.5	340	119.4	104	73	101	70	100	70	96	69	75	73	36	24	30	34	
Tulare	Earlimart	13	35.8	283	119.3	106	71	102	70	101	70	98	69	74	72	36	23	26	29	
Tulare	East Porterville	13	36.1	393		106	71	102	70	101	70	97	69	74	72	36	25	30	33	
Tulare	Exeter	13	36.3	350	119.1	104	72	101	71	100	71	97	69	74	72	39	24	29	32	
Tulare	Fairview	16	35.9	3519	118.5	97	67	94	66	93	66	90	64	70	68	43	11	18	23	
Tulare	Farmersville	13	36.3	350	119.2	104	72	101	72	100	71	97	69	74	72	39	24	29	32	
Tulare	Giant Forest	16	36.6	6412	118.8	84	56	81	55	80	55	77	53	68	66	26	5	24	27	
Tulare	Grant Grove	16	36.7	6600	119.0	82	56	78	55	77	54	74	52	74	72	26	6	33	36	7044
Tulare	Lemoncove	13	36.4	513	119.0	105	72	102	70	101	70	98	68	72	70	38	25	38	41	2513
Tulare	Lindsay	13	36.2	395	119.1	105	72	101	71	100	71	97	69	74	72	40	24	32	35	2634
Tulare	Orosi	13	36.5	400	119.3	104	73	101	70	100	70	96	69	75	73	36	24	30	34	
Tulare	Porterville	13	36.1	393	119.0	106	71	102	70	101	70	97	69	70	68	36	25	37	39	2456
Tulare	Posey 3 E	13	35.8	4960	119.0	89	62	86	61	85	61	82	59	65	63	26	9	-3	1	
Tulare	Three Rivers PH 1	13	36.5	1140	118.9	105	70	102	69	101	69	98	67	72	70	38	24	32	35	2642

						Cooling											Heating			
						0.1%		0.5%		1.0%		2.0%								
County	City	Climate Zone	Latitude	Elevation (ft)	Longitude	DB	MCWB	DB	MCWB	DB	MCWB	DB	MCWB	Design Wetbulb 0.1%	Design Wetbulb 0.5%	Outdoor Daily Range	Winter Median of Extremes	Design Drybulb (0.2%)	Design Drybulb (0.6%)	HDD*
Tulare	Tulare	13	36.2	290	119.4	105	72	101	71	100	71	96	69	73	71	39	24	26	29	
Tulare	Visalia	13	36.3	325	119.3	103	71	100	70	99	70	96	69	71	69	38	25	18	22	2459
Tulare	Woodlake	13	36.3	500	119.1	103	71	100	70	99	70	96	69	73	72	38	25	30	33	
Tuolomne	Hetch Hetchy	16	38.0	3870	119.8	93	62	89	61	88	61	85	59	70	68	32	14	21	25	4816
Tuolumne	Cherry Valley Dam	10	38.0	4765	119.9	96	62	92	61	91	61	88	59	72	70	32	9	31	34	
Tuolumne	Sonora RS	12	38.0	1749	120.4	103	68	100	67	99	67	95	66	72	70	34	20	28	31	3537
Tuolumne	South Entr Yosemite	16	37.5	5120	119.6	92	61	88	60	87	60	84	59	74	72	36	8	36	38	5789
Tuolumne	Strawberry Valley	16	39.6	3808		96	63	93	62	92	62	88	60	72	70	32	14	27	30	5120
Ventura	Camarillo	6	34.2	147	119.2	91	69	84	68	82	68	78	67	71	69	22	28	32	35	
Ventura	Dry Canyon Res	16	34.5	1455	118.5	105	71	100	69	99	69	96	68	66	64	32	24	5	12	
Ventura	El Rio	6	34.3	50	119.2	95	69	88	68	86	68	82	66	71	69	20	30	34	37	
Ventura	Fillmore	9	34.4	435	118.9	100	70	94	69	92	69	87	67	73	71	30	28	32	35	
Ventura	Ojai	9	34.5	750	119.3	102	71	97	69	95	69	91	68	70	68	38	25	37	39	2145
Ventura	Oxnard AFB	6	34.2	49	119.2	94	69	86	68	84	68	79	67	69	67	21	30	38	40	2068
Ventura	Point Mugu	6	34.1	14	119.1	88	68	81	67	79	67	75	66	65	63	15	33	32	35	2328
Ventura	Port Hueneme	6	34.2	13	119.0	88	68	81	67	79	67	75	66	71	69	15	33	33	36	2334
Ventura	San Nicholas Island	6	33.2	504	119.5	85	66	78	65	76	65	70	64	72	70	11	39	31	34	2454
Ventura	Santa Paula	9	34.4	263	119.1	101	71	94	70	92	70	87	68	69	67	28	28	44	46	2030
Ventura	Simi Valley	9	34.4	500	118.8	98	70	93	68	91	68	87	66	73	71	30	28	33	35	
Ventura	Thousand Oaks	9	34.2	810	118.8	98	69	93	68	92	68	88	67	72	70	30	27	32	35	
Ventura	Ventura	6	34.3	341	119.3	89	68	82	67	80	67	76	66	70	68	15	29	34	36	
Yolo	Broderick-Bryte	12	38.6	20	121.5	104	71	100	69	98	69	94	67	72	71	36	25	31	35	
Yolo	Brooks Ranch	12	38.8	294	122.2	104	71	99	70	97	70	93	68	72	71	35	19	31	35	2968
Yolo	Clarksburg	12	38.4	14	121.5	102	70	97	69	95	69	91	67	74	72	35	24	26	29	2971
Yolo	Davis	12	38.5	60	121.8	103	72	99	70	97	70	93	68	72	70	41	24	28	31	2844
Yolo	West Sacramento	12	38.6	19	121.5	104	72	100	70	98	70	94	68	74	71	35	26	31	33	
Yolo	Winters	12	38.5	135	122.0	104	71	99	70	97	70	93	68	71	69	38	24	27	29	2593
Yolo	Woodland	12	38.7	69	121.8	106	72	101	71	100	71	96	69	73	72	40	25	30	33	2708
Yuba	Beale AFB	11	39.1	113	121.4	105	71	102	70	101	70	97	68	67	65	34	25	36	38	2835

						Cooling											Heating			
						0.1%		0.5%		1.0%		2.0%								
County	City	Climate Zone	Latitude	Elevation (ft)	Longitude	DB	MCWB	DB	MCWB	DB	MCWB	DB	MCWB	Design Wetbulb 0.1%	Design Wetbulb 0.5%	Outdoor Daily Range	Winter Median of Extremes	Design Drybulb (0.2%)	Design Drybulb (0.6%)	HDD*
Yuba	Dobbins	11	39.4	1640	121.2	104	70	101	68	100	68	96	67	74	71	31	24	30	33	
Yuba	Linda	11	39.0	60	121.6	105	72	102	70	101	70	97	68	74	72	30	27	32	35	
Yuba	Marysville	11	39.2	60	121.6	105	72	102	70	101	70	97	68	71	69	36	27	33	35	2552
Yuba	Olivehurst	11	39.0	64	121.6	105	72	102	70	101	70	97	68	74	72	36	27	32	35	

*__Heating Degree Day__ is a unit, based on temperature difference and time, used in estimating fuel consumption and specifying nominal annual heating load of a building. For any one day when the mean temperature is less than 65ºF (18ºC), there exist as many degree days as there are Fahrenheit degrees difference in temperature between mean temperature for the day and 65ºF (18ºC).

KEY TO ABBREVIATIONS:

AFB	Air Force Base
AFS	Air Force Station
AP	Airport
CO	City/County Office
FD	Fire Department
FS	Fire Station
MCB	Marine Corps Base
MWWB	Mean Coincident Wet Bulb
NAS	Naval Air Station
NM	National Monument
PH	Power House
RS	Ranger Station

II.4 WYEC2 Climate/Weather Data Format

The ASCII versions of the WYEC2 weather files consist of 8760 identical fixed format records, one for each hour of a 365-day year. Each record is 116 characters in length and is organized according to the format shown in Table II-4, which follows.

The WYEC2 format is derived from the NOAA TD-9734 Typical Meteorological Year (TMY) format in that WYEC2 uses the same field encoding and units as TMY. However, it should be noted that ***all WYEC2 values are for Local Standard Time.*** That is, WYEC2 data should be read sequentially and used with no conversion (except any required unit conversions). This is in marked contrast to the TMY files which contain solar data for Apparent Solar Time and meteorological data for Local Standard Time.

Irradiance and illuminance fields contain data integrated over the hour, meteorological fields contain observations made at the end of the hour. For example, hour 12 contains irradiance/illuminance integrated from 11-12 and meteorological observations made at 12.

Table II-4 – WYEC DATA FORMAT

Field Number	Data Positions	Flag Position (see notes)	Data Element and Description
001	001-005	--	**WBAN station identification number** - Unique number to identify each station - California compliance files contain 00001 - 00016 in this field to indicate the climate zone
002	006-006	--	**File source code** - W = WYEC - T = TMY - C = California Compliance
003	007-014	--	**Time, Yr Mo Day Hr (2 chars each)** - Yr omits the "19" and indicates the source year for the data, i.e., 00 = 1900, 99 = 1999. Data within a single WYEC2 file may have been observed in more than one year. - Mo is 1 to 12. - Day is 1 to month length (28, 30, or 31). - Hr is 1 to 24.
101	015-018	--	**Extraterrestrial irradiance, kJ/m^2** - Amount of solar energy received at top of atmosphere during solar hour ending at time indicated in field 003, based on solar constant of 1367 kJ/m^2. - Nightime values are shown as 0.
102	019-022	023-024	**Global horizontal irradiance, kJ/m^2** - Total of direct and diffuse radiant energy received on a horizontal surface by a pyranometer during the hour ending at the time indicated in field 003.
103	025-028	029-030	**Direct normal irradiance, kJ/m^2** - Portion of the radiant energy received at the pyrheliometer directly from the sun during the hour ending at the time indicated in field 003.
104	031-034	035-036	**Diffuse horizontal irradiance, kJ/m^2** - Amount of radiant energy in kJ/m2 received at the instrument indirectly from the sky during the hour ending at the time indicated in field 003.
105	037-040	041	**Global horizontal illuminance, lux * 100**
106	042-045	046	**Direct normal illuminance, lux * 100**
107	047-050	051	**Diffuse horizontal illuminance, lux * 100**
108	052-055	056	**Zenith luminance, Cd/m^2 * 100**
110	057-058	059	**Minutes of sunshine, 0 - 60 minutes**

Field Number	Data Positions	Flag Position (see notes)	Data Element and Description
201	060-063	064	**Ceiling Height, m * 10** - Ceiling is defined as opaque sky cover of 0.6 or greater. 0000 - 3000 = 0 to 30,000 m 7777 = unlimited; clear 8888 = unknown height of cirroform ceiling
202	065-068	069	**Sky Condition** - All observations assumed to be made after 1 June 1951 ("indicator" at position 77 in TMY is omitted). - Coded by layer in ascending order; four layers are described; if less than 4 layers are present the remaining positions are coded 0. The code for each layer is: 0 = Clear of less than 0.1 cover 1 = Thin scattered (0.1 - 0.5 cover) 2 = Opaque scattered (0.1 - 0.5 cover) 3 = Thin broken (0.6 - 0.9 cover) 4 = Opaque broken (0.6 - 0.9 cover) 5 = Thin overcast (1.0 cover) 6 = Opaque overcast (1.0 cover) 7 = Obscuration 8 = Partial obscuration
203	070-073	074	**Visibility, m * 100** - Prevailing horizontal visibility. 0000-1600 = 0 to 160 kilometers 8888 = unlimited
204	075-082	083	**Weather** - Eight single digit codes as follows:
204 (cont.)	075		**Occurrence of thunderstorm, tornado or squall.** 0 = None 1 = Thunderstorm - lightning and thunder. Wind gusts less than 50 knots, and hail, if any, less than 3/4 inch diameter. 2 = Heavy or severe thunderstorm - frequent intense lightning and thunder. Wind gusts 50 knots or greater and hail, if any, 3/4 inch or greater diameter. 3 = Report of tornado or waterspout. 4 = Squall (sudden increase of wind speed by at least 16 knots, reach 22 knots or more and lasting for at least one minute).
204 (cont.)	076		**Occurrence of rain, rain showers or freezing rain:** 0 = None 1 = Light rain 2 = Moderate rain 3 = Heavy rain 4 = Light rain showers 5 = Moderate rain showers 6 = Heavy rain showers 7 = Light freezing rain 8 = Moderate or heavy freezing rain
204 (cont.)	077		**Occurrence of drizzle, freezing drizzle:** 0 = None 1 = Light drizzle 2 = Moderate drizzle 3 = Heavy drizzle 4 = Light freezing drizzle 5 = Moderate freezing drizzle 6 = Heavy freezing drizzle

Field Number	Data Positions	Flag Position (see notes)	Data Element and Description
204 (cont.)	078		**Occurrence of snow, snow pellets or ice crystals:** 0 = None 1 = Light snow 2 = Moderate snow 3 = Heavy snow 4 = Light snow pellets 5 = Moderate snow pellets 6 = Heavy snow pellets 7 = Light ice crystals 8 = Moderate ice crystals Beginning April 1963 intensities of ice crystals were discontinued. All occurrences since this date are recorded as an 8.
204 (cont.)	079		**Occurrence of snow showers or snow grains:** 0 = None 1 = Light snow showers 2 = Moderate snow showers 3 = Heavy snow showers 4 = Light snow grains 5 = Moderate snow grains 6 = Heavy snow grains Beginning April 1963 intensities of snow grains were discontinued. All occurrences since this date are recorded as a 5.
204 (cont.)	080		**Occurrence of sleet (ice pellets), sleet showers or hail:** 0 = None 1 = Light sleet or sleet showers (ice pellets) 2 = Moderate sleet or sleet showers (ice pellets) 3 = Heavy sleet or sleet showers (ice pellets) 4 = Light hail 5 = Moderate hail 6 = Heavy hail 7 = Light small hail 8 = Moderate or heavy small hail Prior to April 1970 ice pellets were coded as sleet. Beginning April 1970 sleet and small hail were redefined as ice pellets and are coded as a 1, 2, or 3 in this position. Beginning September 1956 intensities of hail were no longer reported and all occurrences were recorded as a 5.
204 (cont.)	081		**Occurrence of fog, blowing dust or blowing sand:** 0 = None 1 = Fog 2 = Ice Fog 3 = Ground Fog 4 = Blowing dust 5 = Blowing sand These values recorded only when visibility less than 7 miles.
204 (cont.)	082		**Occurrence of smoke, haze, dust, blowing snow or blowing spray:** 0 = None 1 = Smoke 2 = Haze 3 = Smoke and haze 4 = Dust 5 = Blowing snow 6 = Blowing spray These values recorded only when visibility less than 7 miles.

Field Number	Data Positions	Flag Position (see notes)	Data Element and Description
205	084-088	089	**Station pressure, kilopascals (kPa) * 100** Pressure at station level 08000 - 10999 = 80 to 109.99 kPa.
206	090-093	094	**Dry bulb temperature, ^{o}C * 10** -700 to 0600 = -70.0 to +60.0 ^{o}C
207	095-098	099	**Dew point, ^{o}C * 10** -700 to 0600 = -70.0 to +60.0 ^{o}C
208	100-102	103	**Wind direction, 0 - 359 degrees** 0 = north Note TMY range is 0-360, WYEC2 has recoded 360 as 0.
209	104-107	108	**Wind speed, m/s * 10** 0 - 1500 = 0 to 150.0 m/s. Wind speed and wind direction both 0 indicates calm.
210	109-110	111	**Total Sky Cover, 0 - 10 in tenths** Amount of celestial dome in tenths covered by clouds or obscuring phenomena.
211	112-113	114	**Opaque Sky Cover, 0 - 10 in tenths** Amount of celestial dome in tenths covered by clouds or obscuration through which the sky and/or higher cloud layers cannot be seen.
212	115-115	116	**Snow Cover** 0 = no snow or a trace of snow 1 = indicates more than a trace of snow on the ground

Notes for Table II-4 – WYEC DATA FORMAT**:**

1. Total file size (including CRLFs) = 118 x 8,760 = 1,033,680 characters.
2. Flag characters indicate the source of the associated value and, in the case of solar fields, optionally give information about the quality of the value.

Some fields have no flag, others have 1 or 2 character flags as follows:

Field	**Flag Type/Comment**
001 – 003	None (record identification fields)
101	None (calculated extraterrestrial irradiance is always present)
102 – 1042	Character (irradiance values)
105 – 2121	Character (all remaining fields)

One character flags are alphabetic (with the exception of 9 for missing) and are defined as follows:

(blank) Value was observed (that is, not derived with a model and not altered.)

A Value has been algorithmically adjusted (e.g., dry bulb temperatures were shifted to match long term means).

E Value was missing and has been replaced by a hand estimate.

F Value was bad and has been replaced by a hand estimate.

I Value was missing and has been replaced with one derived by interpolation from neighboring observations.

J Value was bad and has been replaced with one derived by interpolation from neighboring observations.

M Value was missing and has been replaced with one derived with a model (model used depends on element).

N Value was bad and has been replaced with one derived with a model (model used depends on element).

P Value violated a physical limit and has been replaced by that limit.

Q Value is derived from other values (e.g., illuminance data which were not observed).

9 Value is missing; data positions contain 9s as well.

Two character flags (on irradiance fields 102, 103, and 104) are *either*:

A 1 Character flag (as defined above) followed by a blank, or

A 2 Character numeric value in the range 00 to 99 and are defined in *SERI Standard Broadband Format 2*, as follows:

00 Element is untested (original data)

01-03 Element passed tests on physical limits, model limits (for tolerances less than 3%), and reasonable coupling to other parameters (for tolerances less than 3%).

04 Element passed hand/eye tests.

05 Element failed hand/eye tests and has not been corrected.

06 Element was missing and has not been replaced with an estimate.

07 Element's value is lower than a physical limit.

08 Element's value is higher than a physical limit.

09 Element's value is inconsistent with other components (e.g. direct not consistent with global)

10-93 Element exceeded the 3% tolerance in one of four ways. The following error types are defined:

0 = too low by 3-parameter coupling

1 = too high by 3-parameter coupling

2 = too low by 2D boundary comparison

3 = too high by 2D boundary caparison

The flags in this range are constructed in such a way that both the percentage of error and the type of error are encoded in the two digit flag. To create the flag, one multiplies the percentage of disagreement by 4, subtract 2, and add the error type. The percentage of error should be truncated - only the integer part is used.

The particular error is determined by the remainder of MOD(IQC=2 / 4), where "MOD0 is a mathematical function representing the remainder of the quantity (IQC+2)/4 and "IQC" is the two digit flag number. The percentage error is determined by

IPCT = Int((IQC + 2) /4)

IPCT = 23 indicates an error greater than 23%.

94-97 KN = KT + ERR

FLAG	ERR
94	5% ETR <= ERR <10% ETR
95	10% ETR <= ERR <15% ETR
96	15% ETR <= ERR < 20% ETR
97	20% ETR <= ERR
99	Element is missing or null.

It should be noted that the 2 character numeric flags are appropriate for encoding the results of quality control processing of archival solar data. The 1 character alphabetic flags are appropriate for "best estimate" data sets

in which any questionable values have been replaced. Most WYEC2 files used for engineering purposes will fall into the latter category and will thus use the alphabetic flags on solar fields.

3. Missing elements are 9 filled: all data and flag positions contain 9s.
4. Conversion factors relevant to WYEC2 use:

To convert from	To	Multiply By
kj/m^2	Btu/ft^2	0.08807
m/s * 10	mph	0.2273
kPa	in. Hg.	0.002953
m * 10	ft	32.808
m * 100 miles	miles	0.06214

II.5 Climate/Weather Data Adjustments for Local Conditions

Note: This section is related to nonresidential buildings only.

This appendix section describes the official procedure used by the California Energy Commission to adjust the Title 24 climate zone data for the sixteen (16) climate zones to match the ASHRAE design day conditions for a specific city.[1] Computer software available from the California Energy Commission takes weather data from one of the sixteen climate zones and uses ASHRAE design data for a specific city within that climate zone to create weather data in the format required by the DOE-2 building simulation program.[2] The generated weather data has the latitude, longitude, elevation and air properties of a particular city instead of the climate zone's designated weather station indicated in Table D-3. This procedure only modifies the weather data on the climate zone data file to match a city's design conditions for the days which fall within the ASHRAE summer and winter design day percentage levels. However, the entire data set is adjusted to reflect the city's elevation. This city-specific data into DOE-2 allows the program's Heating Ventilation and Air-Conditioning (HVAC) sizing procedures to use design conditions closer to the simulated building's actual location. This section outlines the procedure used to incorporate a city's design day data into an hourly climate zone data set.

II.5.1 Background

The California Energy Commission, in developing and implementing the Title 24 building energy efficiency standards, has defined sixteen zones that encompass the diversity of California's climatic regions. Each climate zone's hourly weather data set has been derived, predominantly, from a single weather station. Past work sponsored by the Commission modified these data sets to reflect the weather conditions of specific geographic areas within certain climate zones where high levels of building construction were anticipated. This modified Title 24 climate zone data, however, does not represent the particular climatic conditions of any individual city or a specific building site but rather the climate zone as a whole. The weather adjustments described below are intended to increase a compliance program's ability to properly size and simulate HVAC systems.

II.5.2 Reference Year

The 1991 calendar year must be used as the basis for the frequency and timing of the occurrence of holidays, Saturdays and Sundays. The reference method observes the holidays listed in Section 2.3.3.3 of the Nonresidential ACM. This is a fixed compliance input that must be the same for both the standard and proposed designs. The reference method uses CECREV2 hourly data in WYEC format for the sixteen climate zones. Weather data is available in DOE compressed format for the reference computer simulation program along with programs to produce weather data from these files customized to the design weather data for each city in California. The weather data is also available in archived ASCII format for all 8760 hours for each of the 16 climate zones.

II.5.3 Definitions

CITY	One of the California cities listed in ASHRAE's CLIMATIC DATA FOR REGION X
TAPE	Hourly data which describes the regional weather patterns for one of the 16 California climate zones
RH	Relative Humidity (%)
DB	Dry Bulb temperature (^{o}F)
WB	Wet Bulb temperature (^{o}F)
P	Pressure (psia)
MIN	Minimum Daily Dry Bulb Temperature (^{o}F)

MAX	Maximum Daily Dry Bulb Temperature (^oF)
AVG	Average Daily Dry Bulb Temperature (^oF)
	=MAX - MIN) / 2
RANGE	Daily Dry Bulb Temperature Range (^oF)
	= (MAX - MIN)
RH RATIO	The Daily Ratio of RH_{MAX} for the CITY to RH_{MAX} for the TAPE
ODR	Outdoor Daily Range (^oF) as defined by ASHRAE: the difference between the average maximum and average minimum temperature for the warmest month
F	An hourly temperature function derived from the TAPE
	= (DB_{HR} - AVG) / RANGE

II.5.4 Methodology

First, the climate zone design conditions as specified by ASHRAE are computed from the TAPE. The maximum DB is also found off the TAPE. The CITY maximum DB is computed as:

$$CITY_{max\ DB} = TAPE_{max\ DB} * CITY_{0.1\%\ DB} / TAPE_{0.1\%\ DB}\ . \qquad [1]$$

The psychrometric equations are used to derive RH for the TAPE design conditions[3]. The atmospheric pressure is adjusted for the CITY elevation, then RH is computed for the CITY design conditions. The form of equation [1] is used to derive the CITY maximum RH, using the TAPE maximum RH and the RH values computed for the TAPE and the CITY at the 0.1% DB conditions.

For each day of the year the following steps are completed:

1. MAX, Min, AVG, RAGE, WB_{MAX} and RH_{MAX} are determined for the TAPE,
2. A mapping procedure, delineated in Figure 1, is used to find RH_{MAX} for the CITY from the CITY RH design values, the TAPE DB design values and MAX for the TAPE,
3. RH_{MAX} and RH RATIO are determined for the CITY. The RH RATIO is set to 1 for all days with MAX less than the CITY 2.0% maximum DB, which equates the RH of the CITY to the RH of the TAPE for all non-design days,
4. MAX and MIN for the CITY are computed using mapping procedures similar to that illustrated in Figure 1, from the CITY DB design conditions, the TAPE DB design conditions and MAX/MIN for the TAPE,
5. MAX and MIN for the CITY are corrected for the CITY elevation[4],
6. RANGE is calculated for the CITY. RANGE is adjusted by the ratio of the ODR for the CITY to the ODR of the TAPE if MAX is greater then the CITY 2.0% maximum DB,
7. AVG for the CITY is calculated in one of three ways:
   (a) AVG = MAX -5.0* RANGE,

   if MAX > CITY 2.0% maximum DB, or

   (b) AVG = MIN + 0.5* RANGE,

   if MIN < CITY 0.6% minimum DB, or

   (c) AVG = (MAX + MIN) / 2.

Once the daily CITY statistics are computed, they can be applied to the hourly TAPE to generate an hourly CITY weather data set. For each hour of the year, the following steps are completed.

1. F is calculated from the Tape,

2. P is corrected for CITY elevation,
3. RH is calculated for the TAPE,
4. RH for the CITY is derived by applying the RH RATIO to the RH for the TAPE,
5. DB for the CITY is computed: DB = AVG + F * RANGE,
6. WB is calculated using the new values for RH, DB and P for the CITY.

Upon completion of all weather adjustments the resulting data set is converted to the binary format required by the DOE-2 simulation program.

II.5.5 Results

An example of the hourly weather adjustments from a TAPE to a CITY is displayed in figure 2. Four summer days are extracted from both the climate zone 16 data (Mt. Shasta) and the city-specific data (Tahoe City). The first day plotted falls below the design day threshold; the next three days plotted are design days. The figure depicts the expected downshift of hourly temperatures from Mt. Shasta (maximum DB = 96^0F) to Tahoe City (maximum DB = 87^0F).

II.5.6 Software Package

To obtain the software used to adjust DOE-2 files to local design conditions for 641 California cities that is described in this section, write to:

Local Weather Software
Energy Efficiency and Demand Analysis Division
California Energy Commission
1516 Ninth St., MS-28
Sacramento, Ca 95814-5512

NOTES for SECTION II.5

1. ASHRAE Publication SPCDX, CLIMATIC DATA FOR REGION X: ARIZONA, CALIFORNIA, HAWAII, NEVADA, defines a city's design day conditions as the ambient dry bulb and wet bulb temperatures which are percentage levels of hours on an annual basis: Summer values are presented for the 0.1%, 0.5% and 2.0% of the annual maximum dry bulb temperature; Winter values are presented for the median, the 0.2% and 0.6% of the annual minimum dry bulb temperature. This publication lists design day data for 641 California cities.
2. The computer software described herein produces two output files. The first file is the hourly weather data in binary DOE-2 format. To produce this file staff has incorporated a program created by Jeff Hirsch (James J. Hirsch and Associates) which converts an ASCII data file into the packed DOE-2 file format. This file is compatible with the DOE-2 program compiled and distributed by James J. Hirsch and Associates as well as several other PC versions of DOE-2. The second file produced is an ASCII file that contains building location data as well as specific design data required by the CEC's nonresidential Alternative Calculation Method (ACM) procedures.
3. The mathematical equations which describe the thermodynamic properties of moist air are published in the ASHRAE HANDBOOK FUNDAMENTALS Volume, PSYCHROMETRICS Chapter. The relative humidity (RH) which corresponds to specific dry bulb and wet bulb temperatures is derived by these principles of psychrometrics throughout this weather adjustment procedure.
4. Elevation adjustments to dry bulb temperature and pressure are made using the standard atmospheric data published in the ASHRAE FUNDAMENTALS Volume, PSYCHROMETRIC Chapter.

JOINT APPENDIX III

Time Dependent Valuation (TDV)

III.1 Scope and Purpose

Time dependent valuation (TDV) is the currency used to compare energy performance when the performance compliance method is used. TDV is also used to evaluate the cost effectiveness of measures and to perform other codes analysis. TDV replaces source energy, which was used to compare performance prior to the 2005 Standards.

TDV consists of large data sets that convert electricity, gas or propane to TDV energy. The rate of conversion varies for each hour of the year, for each climate zone and for each energy type (electricity, natural gas or propane). The conversion factors also vary by building type: low-rise residential and other building types, including nonresidential, hotel/motel and high-rise residential. There are a total of 96 hourly data sets (16 climates x 3 energy types x 2 building types). The actual TDV data may be downloaded from http://www.h-m-g.com/TDV/index.htm or by writing to:

Time Dependent Valuation (TDV) Data
Energy Efficiency and Demand Analysis Division
California Energy Commission
1516 Ninth St., MS-28
Sacramento, CA 95814-5512

The tables to be used are those without externalities. Because of the length, the actual data is not published in this appendix.

III.2 Summary of Data

Table III-1 through Table III-3 give a statistical summary of the TDV conversion factors for electricity, natural gas and propane. Each table has the annual minimum, maximum, and average for each climate zone and building type.

- Table III-1 – TDV Statistical Data – Electricity
- Table III-2 – TDV Statistical Data – Natural Gas
- Table III-3 – TDV Statistical Data – Propane

Figure III-1 through Figure III-8 show typical variation in the TDV conversion factors for climate zone 12 (Sacramento). Electricity variation is shown for the whole year (Figure III-1 and Figure III-3) and for the Month of July (Figure III-2 and Figure III-4). Variation is greatest for electricity. Figure III-5 through Figure III-8 show the annual variation for natural gas and propane; note that there is no daily or hourly variation, only monthly variation.

- Figure III-1 – Residential Electricity – Climate Zone 12 – Annual
- Figure III-2 – Residential Electricity – Climate Zone 12 – July
- Figure III-3 – Nonresidential Electricity – Climate Zone 12 – Annual
- Figure III-4 – Nonresidential Electricity – Climate Zone 12 – July
- Figure III-5 – Residential Natural Gas – Climate Zone 12 – Annual
- Figure III-6 – Nonresidential Natural Gas – Climate Zone 12 – Annual
- Figure III-7 – Residential Propane – Climate Zone 12 – Annual

- Figure III-8 – Nonresidential Propane – Climate Zone 12 – Annual

Table III-1 – TDV Statistical Data – Electricity (kBtu/kWh)

Climate	Residential			Nonresidential		
Zone	Minimum	Average	Maximum	Minimum	Average	Maximum
1	6.74	12.60	52.52	8.86	16.91	67.88
2	6.77	12.63	54.83	8.86	16.91	67.88
3	6.84	12.70	61.60	8.85	16.89	77.11
4	6.81	12.66	84.13	8.85	16.89	105.15
5	6.83	12.69	70.58	8.88	16.92	87.12
6	6.21	13.94	51.94	8.99	19.12	66.46
7	7.61	14.07	50.52	8.81	17.49	63.72
8	6.14	13.88	63.32	8.95	19.08	80.56
9	6.09	13.82	75.65	8.95	19.07	94.58
10	6.04	13.78	62.87	8.95	19.08	80.47
11	6.73	12.59	50.06	8.90	16.94	64.88
12	6.74	12.60	65.32	8.88	16.92	83.07
13	6.73	12.58	48.08	8.89	16.93	62.53
14	6.05	13.78	56.35	8.99	19.12	72.66
15	6.03	13.76	57.36	8.97	19.10	73.98
16	6.75	12.61	55.44	8.90	16.94	71.36

Table III-2 – TDV Statistical Data – Natural Gas (kBtu/therm)

Climate	Residential			Nonresidential		
Zone	Minimum	Average	Maximum	Minimum	Average	Maximum
1	87.07	94.85	104.74	99.16	108.01	119.28
2	87.07	94.85	104.74	99.16	108.01	119.28
3	87.07	94.85	104.74	99.16	108.01	119.28
4	87.07	94.85	104.74	99.16	108.01	119.28
5	87.07	94.85	104.74	99.16	108.01	119.28
6	97.39	105.08	115.84	87.75	94.68	104.37
7	90.58	106.01	117.21	94.14	110.17	121.81
8	97.39	105.08	115.84	87.75	94.68	104.37
9	97.39	105.08	115.84	87.75	94.68	104.37
10	97.39	105.08	115.84	87.75	94.68	104.37
11	87.07	94.85	104.74	99.16	108.01	119.28
12	87.07	94.85	104.74	99.16	108.01	119.28
13	87.07	94.85	104.74	99.16	108.01	119.28
14	97.39	105.08	115.84	87.75	94.68	104.37
15	97.39	105.08	115.84	87.75	94.68	104.37
16	87.07	94.85	104.74	99.16	108.01	119.28

Table III-3 – TDV Statistical Data – Propane (kBtu/therm)

Climate	Residential			Nonresidential		
Zone	Minimum	Average	Maximum	Minimum	Average	Maximum
1	156.71	172.52	185.79	165.18	183.40	198.68
2	156.71	172.52	185.79	165.18	183.40	198.68
3	156.71	172.52	185.79	165.18	183.40	198.68
4	156.71	172.52	185.79	165.18	183.40	198.68
5	156.71	172.52	185.79	165.18	183.40	198.68
6	156.71	172.52	185.79	165.18	183.40	198.68
7	156.71	172.52	185.79	165.18	183.40	198.68
8	156.71	172.52	185.79	165.18	183.40	198.68
9	156.71	172.52	185.79	165.18	183.40	198.68
10	156.71	172.52	185.79	165.18	183.40	198.68
11	156.71	172.52	185.79	165.18	183.40	198.68
12	156.71	172.52	185.79	165.18	183.40	198.68
13	156.71	172.52	185.79	165.18	183.40	198.68
14	156.71	172.52	185.79	165.18	183.40	198.68
15	156.71	172.52	185.79	165.18	183.40	198.68
16	156.71	172.52	185.79	165.18	183.40	198.68

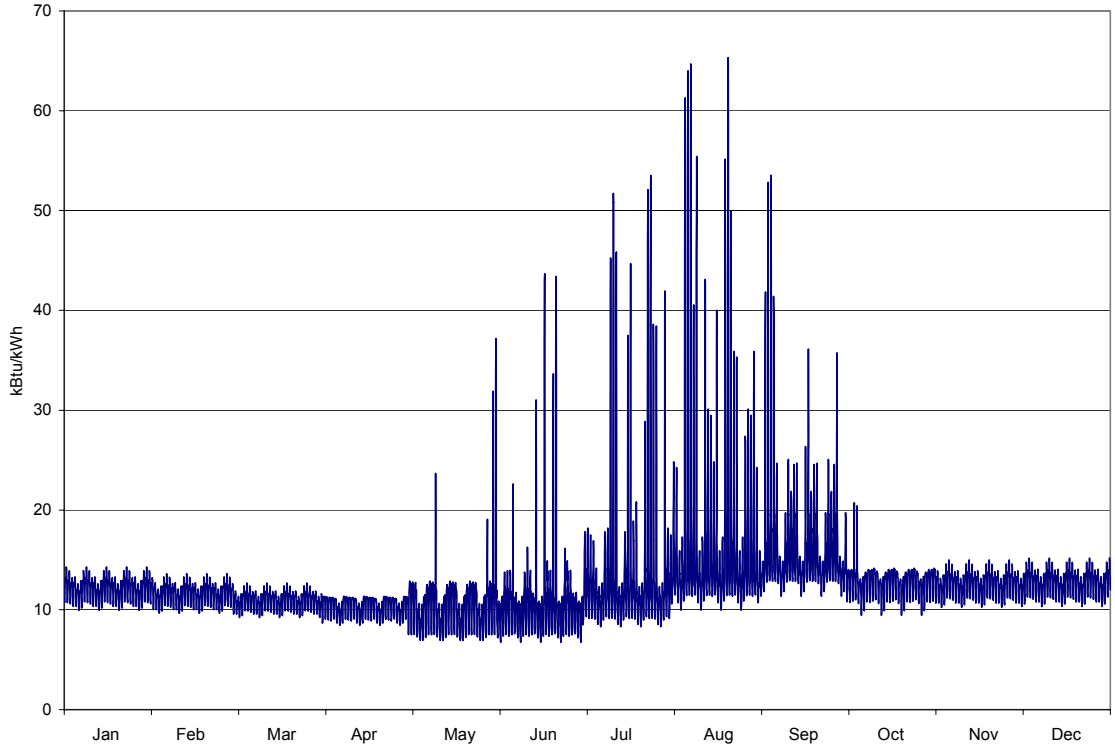

Figure III-1 – Residential Electricity – Climate Zone 12 – Annual

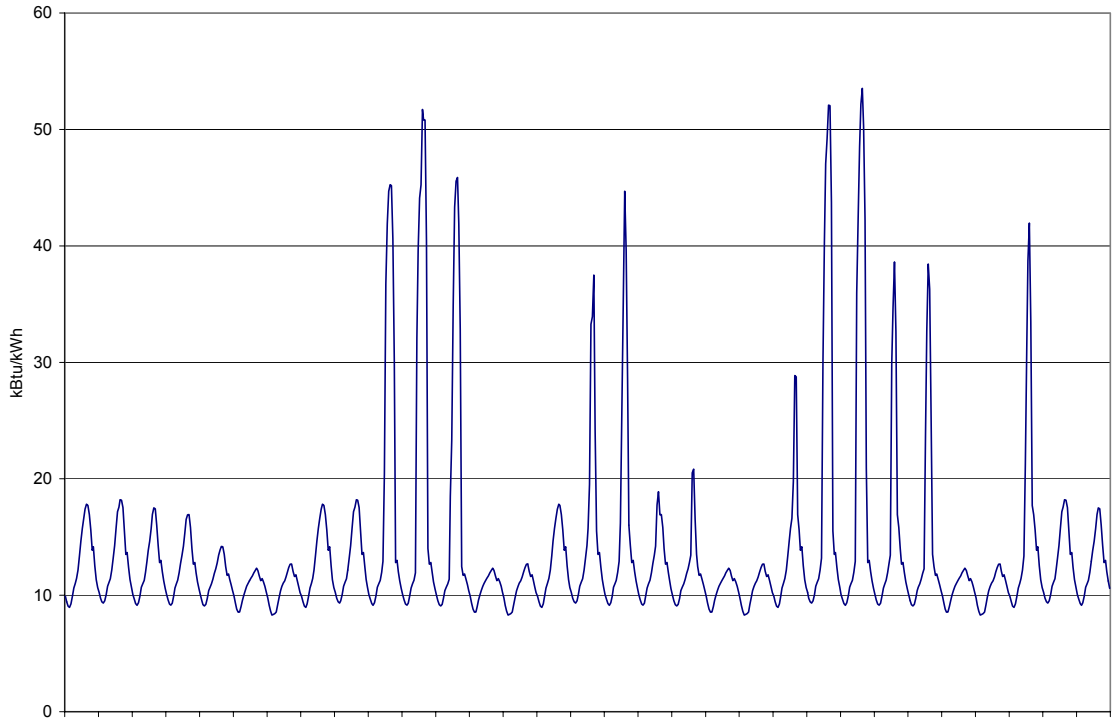

Figure III-2 – Residential Electricity – Climate Zone 12 – July

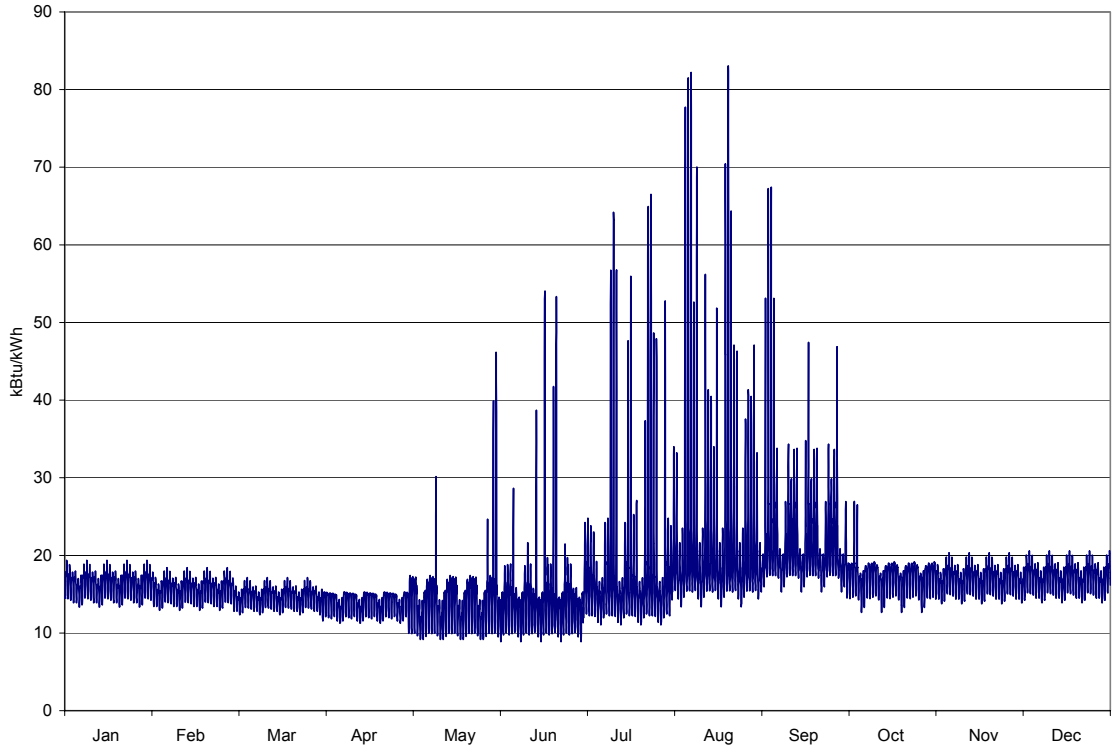

Figure III-3 – Nonresidential Electricity – Climate Zone 12 – Annual

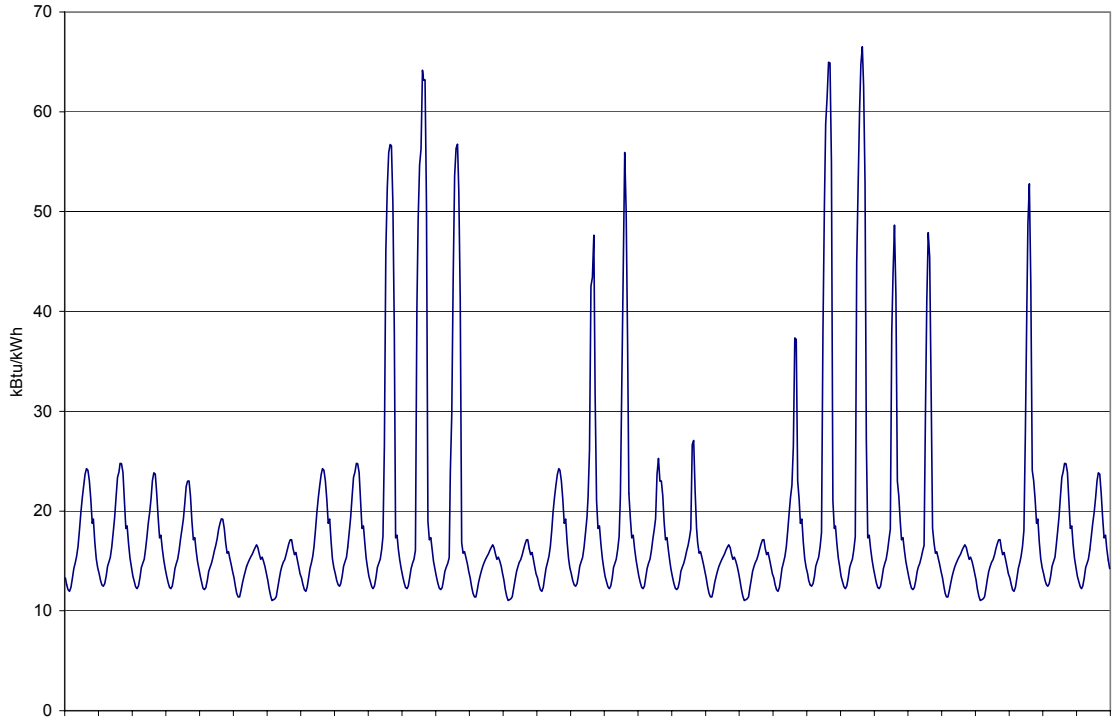

Figure III-4 – Nonresidential Electricity – Climate Zone 12 – July

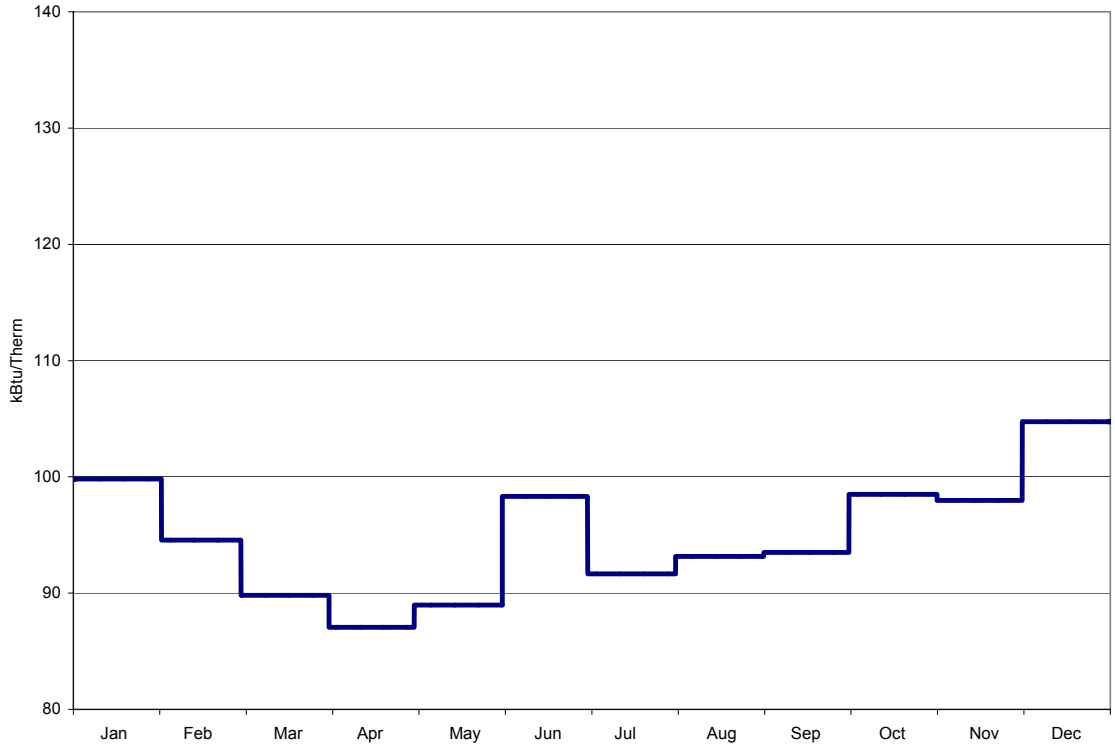

Figure III-5 – Residential Natural Gas – Climate Zone 12 – Annual

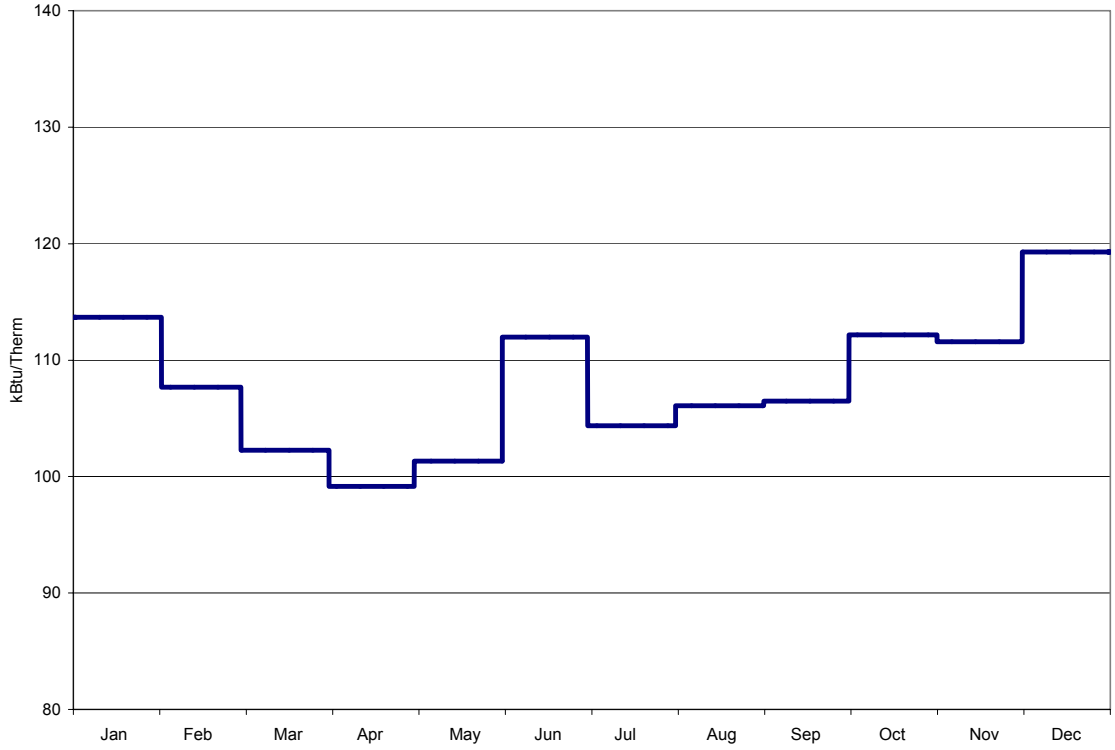

Figure III-6 – Nonresidential Natural Gas – Climate Zone 12 – Annual

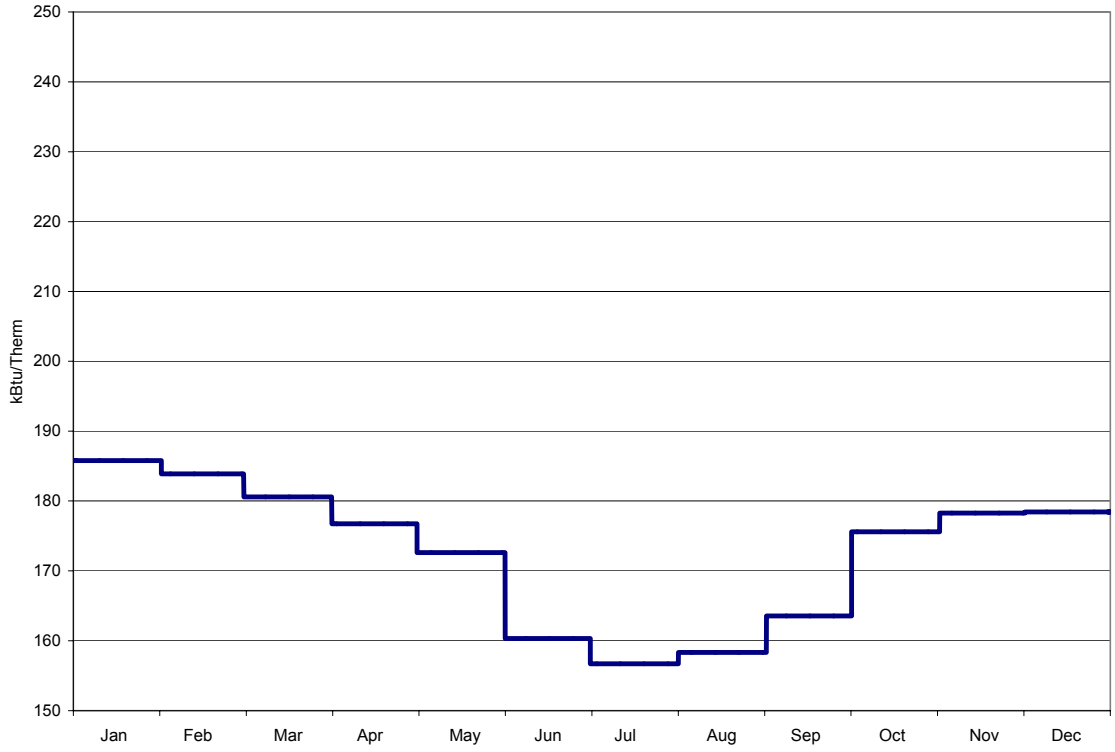

Figure III-7 – Residential Propane – Climate Zone 12 – Annual

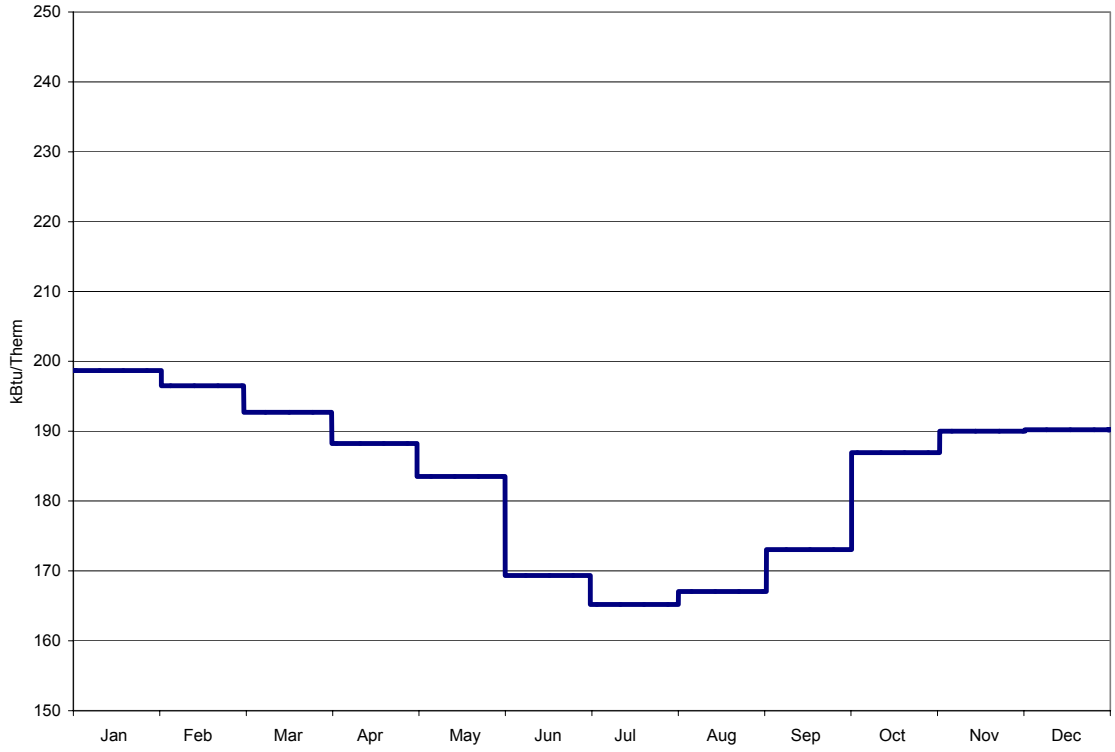

Figure III-8 – Nonresidential Propane – Climate Zone 12 – Annual

JOINT APPENDIX IV

U-factor, C-factor, and Thermal Mass Data

U-factor, C-factor, and Thermal Mass Data 1
IV.1 Scope and Purpose 2
IV.1.1 Introduction 2
IV.1.2 CEC Approved Software 2
IV.1.3 Tapered Insulation 5
IV.1.4 Insulating Layers on Mass and Other Walls 5
IV.2 Roofs and Ceilings 6
Table IV.1 – U-factors of Wood Framed Attic Roofs 6
Table IV.2 – U-factors of Wood Framed Rafter Roofs 8
Table IV.3 – U-factors of Structurally Insulated Panels (SIPS) Roof/Ceilings 10
Table IV.4 – U-factors of Metal Framed Attic Roofs 12
Table IV.5 – U-factors of Metal Framed Rafter Roofs 14
Table IV.6 –U-factors for Span Deck and Concrete Roofs 16
Table IV.7 – U-factors for Metal Building Roofs 18
Table IV.8 – U-factors for Insulated Ceiling with Removable Panels 20
IV.3 Walls 21
Table IV.9 – U-factors of Wood Framed Walls 21
Table IV.10 – U-factors of Structurally Insulated Wall Panels (SIPS) 23
Table IV.11 – U-factors of Metal Framed Walls 25
Table IV.12 – Properties of Hollow Unit Masonry Walls 27
Table IV.13 – Properties of Solid Unit Masonry and Solid Concrete Walls 29
Table IV.14 – Properties of Concrete Sandwich Panels 31
Table IV.15 – U-factors for Spandrel Panels and Glass Curtain Walls 33
Table IV.16 – U-factors for Metal Building[1] Walls 35
Table IV.17 – Thermal Properties of Log Home Walls 37
Table IV.18 – Thermal and Mass Properties of Straw Bale Walls 38
Table IV.19 – Effective R-values for Interior or Exterior Insulation Layers 39
IV.4 Floors and Slabs 41
Table IV.20 – Standard U-factors for Wood-Framed Floors with a Crawl Space 41
Table IV.21 – Standard U-factors for Wood Framed Floors without a Crawl Space 43
Table IV.22 – Standard U-factors for Wood Foam Panel (SIP) Floors 45
Table IV.23 – Standard U-factors for Metal-Framed Floors with a Crawl Space 47
Table IV.24 – Standard U-factors for Metal-Framed Floors without a Crawl Space 49
Table IV.25 – Standard U-factors for Concrete Raised Floors 51
Table IV.26 – F-Factors for Unheated Slab-on-Grade Floors 52
Table IV.27 – F-Factors for Heated Slab-on-Grade Floors 53
IV.5 Miscellaneous Construction 54
Table IV.28 – Opaque Doors 54
IV.6 Modeling Constructions in the Nonresidential ACM 55
IV.6.1 DOE-2 Material Codes 55
IV.6.2 Framing/Insulation Layer 55
IV.6.3 Thermal Mass Properties 55
IV.6.4 Metal Buildings 55
IV.6.5 Slabs 55
Table IV.29 – Physical Properties of Materials 56
Table IV.30 – Rules for Calculating Mass Thermal Properties From Published Values 57

IV.1 Scope and Purpose

Introduction

The values in this appendix must be used for all residential and nonresidential compliance calculations: prescriptive, overall envelope, and whole building performance. CEC Approved computer programs may make adjustments to the values in these tables using procedures described in this appendix.

The data tables are organized first by roofs, walls, and floors. For each, the data is further organized by construction type, beginning with wood framed construction, followed by metal framed construction, concrete and special construction assemblies. Each table features a letter/number coordinate system (shaded in gray) that can be used as an identifier for each value, i.e. IV2-A10 indicates Table IV.2, Column A, Row 10. Construction assembly descriptions shall be concatenated first by row and then by column. For example, the descriptions of IV1-A17 and IV9-H3 and shall be as follows (abbreviations are acceptable):

Wood Framed Attic, Trusses@24 in. OC, R-30 attic insulation, No continuous insulation
Wood Framed Wall, Wd 2x4 @16 in. OC, R-13 cavity insulation, R-14 continuous insulation

If a construction assembly is not adequately represented in the tables below, the permit applicant or the manufacturer of the product may request approval from the CEC . The CEC Executive Director will grant such approval, after reviewing submittals from the applicant. New constructions that are approved by the Executive Director will be published as an addendum to this appendix for use by all compliance authors. Addenda may consist of new tables or additional rows or columns to existing tables.

CEC Approved Software

CEC approved software used for performance or prescriptive calculations may make adjustments to the data contained in this appendix to account for the special circumstances of particular constructions. This section defines the rules for making these adjustments. These adjustments may not be made when the tables are used manually. Software may have input screens where the user may choose a construction by entering the cavity insulation (or insulation penetrated by framing); the continuous insulation; and other factors such as framing spacing. To the software user, the process of using these tables may look very much like a traditional U-factor calculation.

Accounting for Continuous Insulation R-value

Many of the tables in this appendix have columns for varying levels of continuous insulation. Continuous insulation is insulation that is uninterrupted by framing and provides a continuous insulating layer. Limits on the position of the continuous insulation and other factors are specified in each table. When data from these tables is used manually, the R-value of the continuous insulation in the proposed construction shall be equal to or greater than the R-value shown in the column heading; no interpolation is permitted. CEC approved software used for performance or prescriptive calculations may account for any amount of continuous insulation using Equation IV-1. This adjustment may not be used, however, for continuous insulation with thermal resistance less than R-2.

Equation IV-1

$$U_{With.Cont.Insul} = \frac{1}{\frac{1}{U_{Col.A}} + R_{Cont.Insul}}$$

where

$U_{With.Cont.Insul}$ Calculated U-factor of the construction assembly with a specific R-value of continuous insulation.

$U_{Col.A}$ A U-factor selected from column A.

$R_{Cont.Insul}$ The R-value of continuous insulation.

If insulation layers are added that are interrupted by furring strips, then the effective R-values from Table IV.14 shall be used in Equation IV-1.

Accounting for Unusual Construction Layers

The assumptions that are the basis of the U-factors published in this appendix are documented in the paragraphs following each table. CEC approved software used for prescriptive or performance calculations may be used to make adjustments to these assumptions based on data entered by the software user. Adjustments may only be made, however, when the total R-value of the proposed construction is at least an R-2 greater than the documented assumption. Each table includes the assumptions used to determine the U-factors. Equation IV-2 shall be used to make these adjustments.

Equation IV-2

$$U_{Proposed} = \frac{1}{\frac{1}{U_{With.Cont.Insul}} + \Delta R_{Assumed}}$$

where

$U_{Proposed}$ Calculated U-factor of the proposed construction assembly.

$U_{With.Cont.Insul}$ The U-factor adjusted for continuous insulation using Equation IV-1.

$\Delta R_{Assumed}$ The difference in R-value between what was assumed in the table and the proposed construction for a continuous layer.

There are limits, however, on the types of adjustments that can be made.

- The difference in resistance shall be at least R-2. When calculating the difference in R-value, no changes in assumption shall be made to the framing/insulation layer; the proposed construction shall assume the same as the table.
- The thermal resistance of air layers shall be taken from the 2001 ASHRAE Fundamentals Handbook for a mean temperature of 50°F and a temperature difference of 20 °F and an effective emittance of 0.82. R-values for air layers for roof and ceiling assemblies shall be based on heat flow up. R-values for air layers for floor assemblies shall be based on heat flow down. R-values for other assemblies shall be based on horizontal heat flow. Air layers must be sealed on edges to prevent air layer mixing with ambient air.
- One additional air gap may be credited, but not air gaps that are within the framing insulation cavity layer; these are already accounted for in the published data. Air gaps of less than 0.5 inch thickness shall be considered to have an R-value of zero. An example of an acceptable additional air gap would be the space between a brick veneer and the sheathing on the framed wall.

Double Walls

The U-factor of double walls or other double assemblies may be determined by combining the U-factors from the individual construction assemblies that make up the double wall. The following equation shall be used.

Equation IV-3

$$U_{Combined} = \frac{1}{\frac{1}{U_1} + \frac{1}{U_2}}$$

Tapered Insulation

If continuous roof insulation is tapered for drainage or other purposes, then the user may determine the overall U-factor in one of two ways:

- Determine the U-factor for the roof at the location where the insulation is at a minimum and where it is at a maximum. Take the average of these two U-factors. With the R-value compliance approach (prescriptive method only), calculate the R-value as the inverse of the average U-factor as determined above. R-values may not be averaged.
- Divide the roof into sub-areas for each one-inch increment of insulation and determine the U-factor of each sub-area. This approach may only be used with the performance method, and in this case, each sub area shall be modeled as a separate surface.

When roofs have a drain located near the center and when tapered insulation creates a slope to the drain, the surface area at the maximum insulation thickness will be significantly greater than the surface area at the minimum thickness, so the second method will give a more accurate result. The first method yields a conservative estimate.

Insulating Layers on Mass and Other Walls

The data in Table IV.14 may be used to modify the U-factors and C-factors from Table IV.12, Table IV.13, and Table IV.14 when an additional layer is added to the inside or outside of the mass wall. For exterior insulation finish systems (EIFS) or other insulation only systems, values should be selected from row 26 of Table IV.14. In these cases, the R-value of the layer is equal to the R-value of the insulation. The other choices from this table represent systems typically placed on the inside of mass walls. The following equations calculate the total U-factor or C-factor, where U_{mass} and C_{mass} are selected from Table IV.12, Table IV.13, or Table IV.14 and $R_{Outside}$ and R_{Inside} are selected from Table IV.14. $R_{outside}$ is selected from row 26 while R_{inside} is selected from rows 1 through 25.

Equation IV-4

$$U_{Total} = \frac{1}{R_{Outside} + \frac{1}{U_{Mass}} + R_{Inside}}$$

Equation IV-5

$$C_{Total} = \frac{1}{R_{Outside} + \frac{1}{C_{Mass}} + R_{Inside}}$$

The values from Table IV.14 may be used to modify the U-factors of other construction assemblies as well, when non-homogeneous layers are added (see Equation IV-1).

IV.2 Roofs and Ceilings

Table IV.1 – U-factors of Wood Framed Attic Roofs

Truss Spacing	R-value of Attic Insulation		Rated R-value of Continuous Insulation[1]							
			None	R-2	R-4	R-6	R-7	R-8	R-10	R-14
			A	B	C	D	E	F	G	H
16 in. OC	None	1	0.300	0.186	0.135	0.106	0.096	0.087	0.074	0.057
	R-11	2	0.079	0.067	0.059	0.053	0.050	0.047	0.043	0.037
	R-13	3	0.071	0.061	0.054	0.049	0.046	0.044	0.040	0.035
	R-19	4	0.049	0.045	0.041	0.038	0.036	0.035	0.033	0.029
	R-22	5	0.043	0.039	0.036	0.034	0.033	0.032	0.030	0.026
	R-25	6	0.038	0.035	0.033	0.031	0.030	0.029	0.027	0.024
	R-30	7	0.032	0.030	0.028	0.027	0.026	0.025	0.024	0.022
	R-38	8	0.026	0.024	0.023	0.022	0.022	0.021	0.020	0.019
	R-49	9	0.020	0.019	0.019	0.018	0.018	0.017	0.017	0.015
	R-60	10	0.017	0.016	0.016	0.015	0.015	0.015	0.014	0.013
24 in. OC	None	11	0.305	0.188	0.136	0.107	0.097	0.088	0.075	0.058
	R-11	12	0.076	0.066	0.058	0.052	0.049	0.047	0.043	0.036
	R-13	13	0.068	0.059	0.053	0.048	0.045	0.043	0.040	0.034
	R-19	14	0.048	0.044	0.040	0.037	0.036	0.034	0.032	0.028
	R-22	15	0.042	0.039	0.036	0.033	0.032	0.031	0.029	0.026
	R-25	16	0.037	0.035	0.032	0.030	0.030	0.029	0.027	0.024
	R-30	17	0.032	0.030	0.028	0.027	0.026	0.025	0.024	0.022
	R-38	18	0.025	0.024	0.023	0.022	0.022	0.021	0.020	0.018
	R-49	19	0.020	0.019	0.019	0.018	0.018	0.017	0.017	0.015
	R-60	20	0.016	0.016	0.015	0.015	0.015	0.015	0.014	0.013

Notes:

1. Continuous insulation shall be located at the ceiling, below the bottom chord of the truss and be uninterrupted by framing.

2. In climate zones 1 and 16 the insulating R-value of continuous insulation materials installed above the roof waterproof membrane shall be multiplied times 0.8 before choosing the table column for determining assembly U-factor.

This table contains thermal performance data (U-factors) for wood framed attics where the ceiling provides the air barrier and the attic is ventilated. Wood trusses are the most common construction for low-rise residential buildings and for Type V nonresidential buildings. While the sketch shows a truss system with a flat ceiling, the data in this table may be used for scissor trusses and other non-flat trusses. If the bottom chord is not flat, then the slope should not exceed 3:12 if blown insulation is used. This table may also be used with composite trusses that have a wood top and bottom chord and metal struts connecting them.

For the majority of cases, values will be selected from column A of this table. Column A shall be used for the common situation where either batt or blown insulation is placed directly over the ceiling (and tapered at the edges). Builders or designers may increase thermal performance by adding a continuous insulation layer at the ceiling. The continuous insulation is typically a rigid polystyrene or polyisocyanurate foam insulation. Continuous insulation does not include the blown or batt insulation that is over the bottom chord of the truss (this is already accounted for in the U-factors published in Column A).

When this table is used manually, the R-value of continuous insulation shall be equal to or greater than the R-value published in the continuous insulation columns. For instance if the insulation is R-3, the R-2 column shall be used. No interpolation is permitted when data from the table is selected manually. CEC approved

ACMs, including those used for prescriptive compliance, may accurately account for any amount of continuous insulation or for unusual construction assemblies using Equation IV-1 and Equation IV-2.

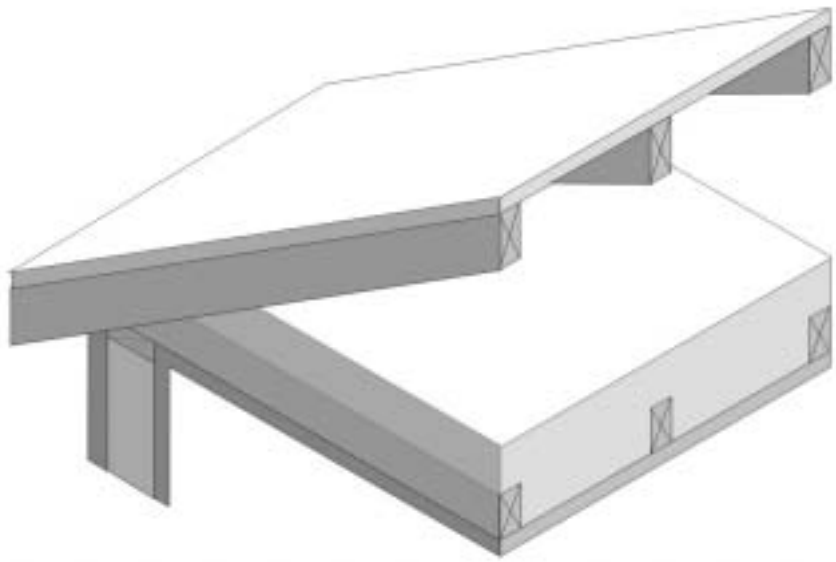

Figure IV.1 – Wood Framed Attic Roofs

This table shall not be used for cases where insulation is located at the roof of the attic. There are two situations where this may be done. Foamed plastic may be sprayed onto the top chord of the trusses and onto the bottom of the upper structural deck (roof). The foam expands and cures to provide an airtight barrier and continuous insulation. Another case is where a plastic membrane or netting is installed above the ceiling and either batt or blown insulation is installed over the netting. In both of these cases, the attic is sealed (not ventilated). There are a number of issues related to these insulation techniques and special CEC approval is required.

Assumptions. These data are calculated using the parallel path method documented in the 2001 ASHRAE Fundamentals. These calculations assume an exterior air film of R-0.17, asphalt shingles of R-0.44 (AR02), building paper of R-0.06 (BP01), ½" of plywood of R-0.63 (PW03), an attic air space (greater than 3.5") with a R-0.80, the insulation / framing layer, continuous insulation (if any) 1/2" gypsum board (GP01) of R-0.45, and an interior air film (heat flow up) of R-0.61. Wood 2x4 framing is assumed at the ceiling level. R-13 of attic insulation is assumed between the framing members; above that level, attic insulation is uninterrupted by framing. The framing percentage is assumed to be 10% for 16 in. OC and 7% for 24 in. OC. 7.25% of the attic insulation above the framing members is assumed to be at half depth, due to decreased depth of insulation at the eaves.

Table IV.2 – U-factors of Wood Framed Rafter Roofs

Rafter Spacing	R-value of Cavity Insulation	Nominal Framing Size		Rated R-value of Continuous Insulation[2]							
				None	R-2	R-4	R-6	R-7	R-8	R-10	R-14
				A	B	C	D	E	F	G	H
16 in. OC	None	Any	1	0.297	0.184	0.134	0.105	0.095	0.087	0.074	0.057
	R-11	2x6	2	0.076	0.066	0.058	0.052	0.049	0.047	0.043	0.037
	R-13	2x6	3	0.069	0.060	0.053	0.048	0.046	0.044	0.040	0.034
	R-15	2x6	4	0.062	0.055	0.049	0.045	0.043	0.041	0.038	0.033
	R-19	2x8	5	0.051	0.046	0.042	0.038	0.037	0.036	0.033	0.029
	R-21	2x8	6	0.048	0.043	0.039	0.036	0.035	0.034	0.031	0.028
	R-22	2x10	7	0.044	0.041	0.037	0.035	0.033	0.032	0.030	0.027
	R-25	2x10	8	0.041	0.037	0.034	0.032	0.031	0.030	0.028	0.025
	R-30 [1]	2x10	9	0.036	0.033	0.031	0.029	0.028	0.027	0.026	0.023
	R-30	2x12	10	0.035	0.032	0.030	0.028	0.027	0.027	0.025	0.023
	R-38[1]	2x12	11	0.029	0.027	0.026	0.024	0.024	0.023	0.022	0.020
	R-38	2x14	12	0.028	0.027	0.025	0.024	0.023	0.023	0.022	0.020
	Foamed Plastic or Cellulose Insulation[3]	2x4	13	0.074	0.064	0.056	0.050	0.047	0.045	0.041	0.035
		2x6	14	0.052	0.046	0.042	0.038	0.037	0.035	0.033	0.029
		2x8	15	0.041	0.037	0.034	0.032	0.031	0.030	0.028	0.025
		2x10	16	0.033	0.031	0.029	0.027	0.026	0.025	0.024	0.022
		2x12	17	0.028	0.026	0.025	0.023	0.023	0.022	0.021	0.019
24 in. OC	None	Any	18	0.237	0.160	0.121	0.097	0.089	0.081	0.070	0.055
	R-11	2x6	19	0.075	0.065	0.057	0.051	0.049	0.046	0.042	0.036
	R-13	2x6	20	0.067	0.058	0.052	0.047	0.045	0.043	0.040	0.034
	R-15	2x6	21	0.060	0.053	0.048	0.044	0.042	0.040	0.037	0.032
	R-19	2x8	22	0.049	0.045	0.041	0.038	0.036	0.035	0.033	0.029
	R-21	2x8	23	0.046	0.042	0.038	0.035	0.034	0.033	0.031	0.027
	R-22	2x10	24	0.043	0.039	0.036	0.034	0.033	0.032	0.030	0.026
	R-25	2x10	25	0.039	0.036	0.033	0.031	0.030	0.029	0.028	0.025
	R-30[1]	2x10	26	0.034	0.032	0.030	0.028	0.027	0.026	0.025	0.022
	R-30	2x12	27	0.033	0.031	0.029	0.027	0.027	0.026	0.025	0.022
	R-38 [1]	2x12	28	0.028	0.026	0.025	0.023	0.023	0.022	0.021	0.019
	R-38	2x14	29	0.027	0.026	0.024	0.023	0.022	0.022	0.021	0.019
	Foamed Plastic or Cellulose Insulation[3]	2x4	30	0.071	0.061	0.054	0.049	0.046	0.044	0.042	0.035
		2x6	31	0.050	0.044	0.040	0.037	0.036	0.034	0.033	0.028
		2x8	32	0.039	0.036	0.033	0.031	0.030	0.029	0.028	0.024
		2x10	33	0.032	0.029	0.028	0.026	0.025	0.025	0.024	0.021
		2x12	34	0.026	0.025	0.024	0.022	0.022	0.021	0.021	0.019

Notes:

1 A higher density fiberglass batt is needed to provide adequate room for ventilation.

2 Continuous insulation shall be located at the ceiling or at the roof and be uninterrupted by framing.

3 Foamed plastic or cellulose insulation shall fill the entire cavity. Cellulose shall have a binder to prevent sagging. Verify that the building official in your area permits this construction, since there is no ventilation layer.

4. In climate zones 1 and 16 the insulating R-value of continuous insulation materials installed above the roof waterproof membrane shall be multiplied times 0.8 before choosing the table column for determining assembly U-factor.

This table contains thermal performance data (U-factors) for wood framed rafter roofs. This is a common construction in low-rise residential buildings and in Type V nonresidential buildings. The rafters may be either flat or in a sloped application. Insulation is typically installed between the rafters. With this construction, the insulation is in contact with the ceiling and there is typically a one-inch air gap above the insulation so that moisture can be vented. Whether there is a space above the insulation depends on local climate conditions and may not be required in some building permit jurisdictions. The ventilation space requirement would have to be waived by the building official for the case of cellulose insulation or foamed plastic, since the entire cavity would be filled.

For the majority of cases, U-factors will be selected from Column A of this table; this case covers insulation placed only in the cavity. When continuous insulation is installed either at the ceiling or at the roof, then U-factors from other columns may be selected. The continuous insulation is typically a rigid polystyrene or polyisocyanurate foam insulation, but can also include mineral wool or other suitable materials.

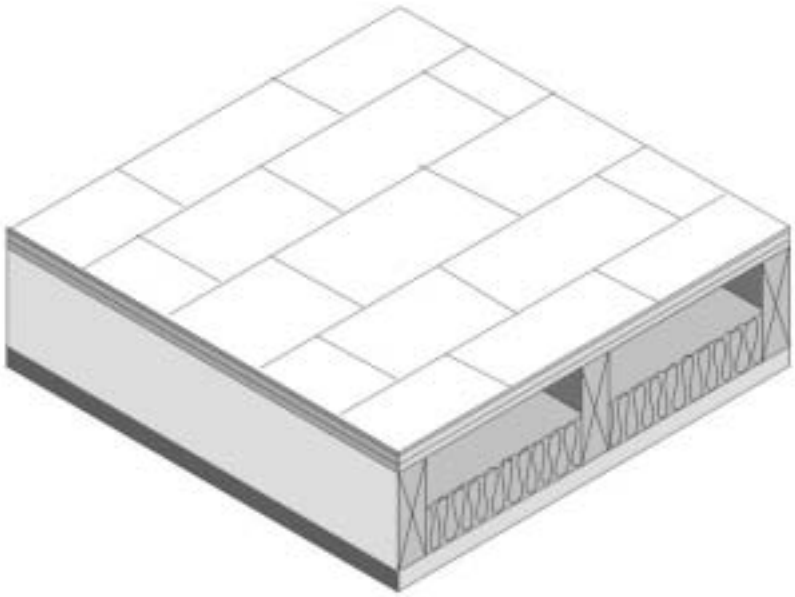

Figure IV.2 – Wood Frame Rafter Roof

When this table is used manually, the R-value of continuous insulation shall be equal to or greater than the R-value published in the continuous insulation columns. For instance if the continuous insulation is R-3, the R-2 column shall be used. No interpolation is permitted when data from the table is used manually. CEC approved software, however, may determine the U-factor for any amount of continuous insulation and/or for unusual construction layers using Equation IV-1 and Equation IV-2.

Assumptions. These data are calculated using the parallel path method documented in the 2001 ASHRAE Fundamentals. These calculations assume an exterior air film of R-0.17, asphalt shingles of R-0.44 (AR02), building paper of R-0.06 (BP01), ½” of plywood of R-0.63 (PW03), continuous insulation (optional), the insulation / framing layer with an air space of R-0.76 or R-0.80 (except for cellulose and foamed plastic), 1/2" gypsum of R-0.45 (GP01), and an interior air film (heat flow up diagonally) of R-0.62. The continuous insulation may also be located at the ceiling, between the drywall and the framing. The framing percentage is assumed to be 10% for 16 in. OC and 7% for 24 in. OC. The thickness of framing members is assumed to be the actual size of 3.50, 5.50, 7.25, 9.25, and 11.25 in. for 2x4, 2x6, 2x8, 2x10, and 2x12 nominal sizes. High-density batt insulation is assumed to be 8.5 in. thick for R-30 and 10.5 in thick for R-38. The R-value of sprayed foam and cellulose insulation is assumed to be R-3.6 per inch.

Table IV.3 – U-factors of Structurally Insulated Panels (SIPS) Roof/Ceilings

System	Insulation R-value	Framing or Spline Spacing		R-value of Additional Layer of Continuous Insulation[2]							
				None	R-2	R-4	R-6	R-7	R-8	R-10	R-14
				A	B	C	D	E	F	G	H
Wood Framing	R-14[1]	48 in. o.c.	1	0.062	0.055	0.049	0.045	0.043	0.041	0.038	0.033
	R-22	48 in. o.c.	2	0.043	0.039	0.037	0.034	0.033	0.032	0.030	0.027
	R-28	48 in. o.c.	3	0.034	0.032	0.030	0.028	0.027	0.027	0.025	0.023
	R-36	48 in. o.c.	4	0.027	0.026	0.025	0.023	0.023	0.022	0.021	0.020
	R-22	96 in o.c.	5	0.042	0.038	0.036	0.033	0.032	0.031	0.029	0.026
	R-28	96 in o.c.	6	0.033	0.031	0.029	0.027	0.027	0.026	0.025	0.022
	R-36	96 in o.c.	7	0.026	0.025	0.024	0.023	0.022	0.022	0.021	0.019
Steel Framing	R-14[1]	48 in. o.c.	8	0.075	0.065	0.058	0.052	0.049	0.047	0.043	0.037
	R-22	48 in. o.c.	9	0.057	0.051	0.046	0.042	0.041	0.039	0.036	0.032
	R-28	48 in. o.c.	10	0.047	0.043	0.040	0.037	0.035	0.034	0.032	0.028
	R-36	48 in. o.c.	11	0.043	0.040	0.037	0.034	0.033	0.032	0.030	0.027
OSB Spline	R-22	48 in. o.c.	12	0.041	0.038	0.035	0.033	0.032	0.031	0.029	0.026
	R-28	48 in. o.c.	13	0.032	0.030	0.028	0.027	0.026	0.025	0.024	0.022
	R-36	48 in. o.c.	14	0.026	0.024	0.023	0.022	0.022	0.021	0.020	0.019
	R-22	96 in o.c.	15	0.040	0.037	0.035	0.033	0.032	0.031	0.029	0.026
	R-28	96 in o.c.	16	0.032	0.030	0.028	0.027	0.026	0.025	0.024	0.022
	R-36	96 in o.c.	17	0.026	0.024	0.023	0.022	0.022	0.021	0.020	0.019

Notes:

1. The insulation R-value must be at least R-14 in order to use this table.

2 For credit, continuous insulation shall be at least R-2 and may be installed on either the inside or the exterior of the wall.

3. In climate zones 1 and 16 the insulating R-value of continuous insulation materials installed above the roof waterproof membrane shall be multiplied times 0.8 before choosing the table column for determining assembly U-factor.

This table gives U-factors for structurally insulated panels used in ceiling and roof constructions. This is a construction system that consists of rigid foam insulation sandwiched between two layers of plywood or oriented strand board (OSB). Data is provided for three variations of this system. The system labeled “Wood Framing” uses wood spacers to separate the plywood or OSB boards and provide a means to connect the panels with mechanical fasteners. The system labeled “Steel Framing” uses steel framing members and mechanical fasteners at the joints. The system labeled “OSB Spline” uses splines to connect the panels so that framing members do not penetrate the insulation.

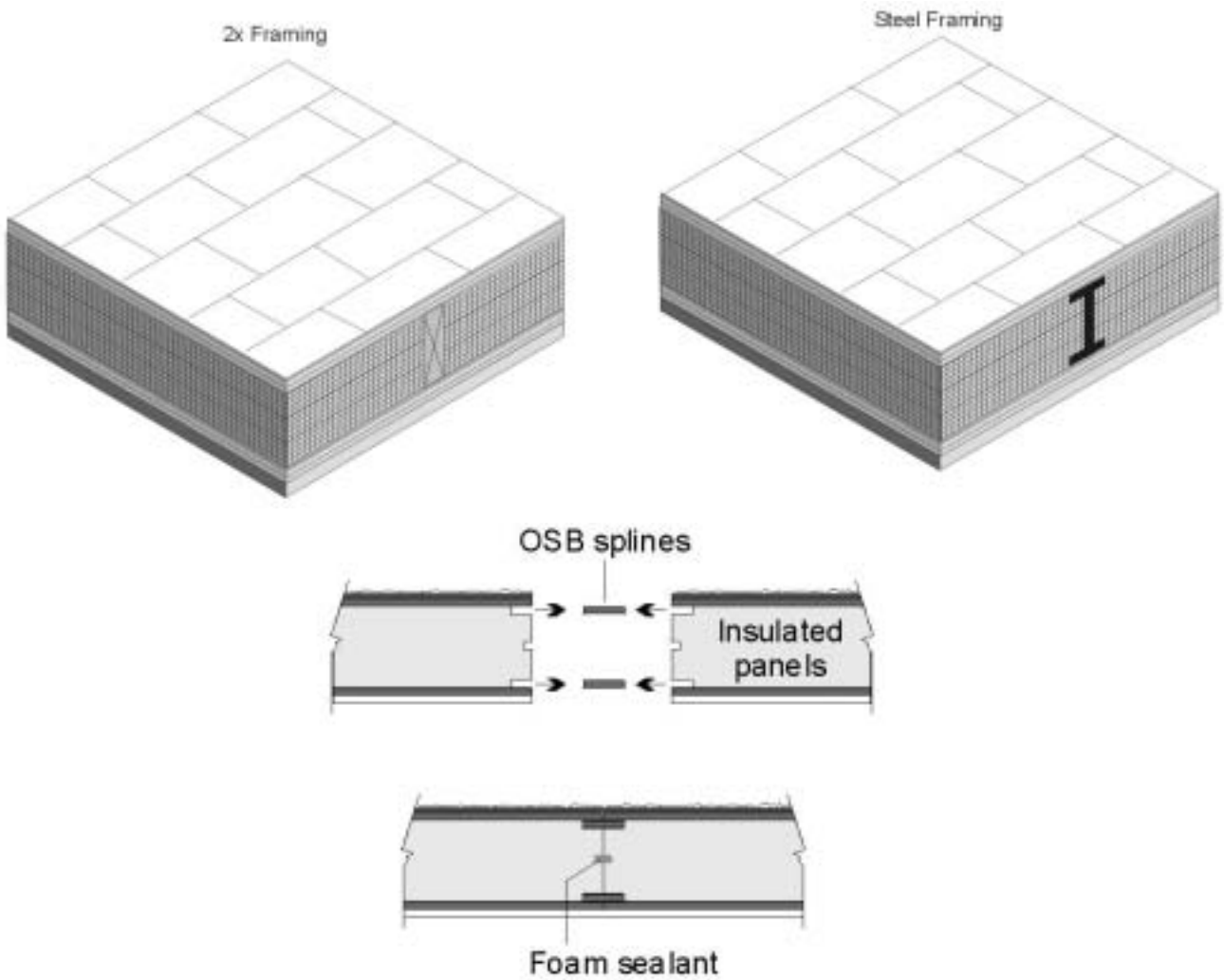

Figure IV.3 – SIPS Roof/Ceiling

Data from Column A will be used in most cases, since it is quite unusual to add continuous insulation to a panel that is basically all insulation anyway. If insulation is added, however, then the U-factor is selected from one of the other columns. If the tables are used manually, then the installed insulation shall have a thermal resistance at least as great as the column selected. When the table is used with CEC approved software, then the R-value of any amount of continuous insulation may be accounted for along with the thermal resistance of special construction layers may be accounted for using Equation IV-1 and Equation IV-2.

Assumptions. These data are calculated using the parallel path method documented in the 2001 ASHRAE Fundamentals. Assemblies with metal framing are calculated using the ASHRAE Zone Method Calculation. These calculations assume an exterior air film of R-0.17, asphalt shingles of R-0.44 (AR02), building paper of R-0.06 (BP01), 7/16” of OSB of R-0.69, the rigid insulation, another layer of 7/16” of OSB, 1/2" gypsum board of R-0.45 (GP01), and an interior air film (heat flow up diagonally) of R-0.62. If an additional layer of insulation is used, this may be installed on either the inside or exterior of the SIPS panel.

Table IV.4 – U-factors of Metal Framed Attic Roofs

Spacing	Nominal Framing Size	Cavity Insulation R-Value:		Rated R-value of Continuous Insulation[1]							
				R-0	R-2	R-4	R-6	R-7	R-8	R-10	R-14
				A	B	C	D	E	F	G	H
16 in. OC	Any	None	**1**	0.328	0.198	0.142	0.111	0.100	0.091	0.077	0.059
	2 x 4	R-11	**2**	0.126	0.101	0.084	0.072	0.067	0.063	0.056	0.046
	(3.65 in.)	R-13	**3**	0.121	0.097	0.082	0.070	0.066	0.061	0.055	0.045
		R-19	**4**	0.073	0.064	0.056	0.051	0.048	0.046	0.042	0.036
		R-22	**5**	0.060	0.054	0.049	0.044	0.042	0.041	0.038	0.033
		R-25	**6**	0.052	0.047	0.043	0.039	0.038	0.037	0.034	0.030
		R-30	**7**	0.042	0.038	0.036	0.033	0.032	0.031	0.029	0.026
		R-38	**8**	0.032	0.030	0.028	0.027	0.026	0.025	0.024	0.022
		R-49	**9**	0.024	0.023	0.022	0.021	0.020	0.020	0.019	0.018
		R-60	**10**	0.019	0.018	0.018	0.017	0.017	0.017	0.016	0.015
24 in. OC	Any	None	**11**	0.324	0.197	0.141	0.110	0.099	0.090	0.076	0.059
	2 x 4	R-11	**12**	0.109	0.089	0.076	0.066	0.062	0.058	0.052	0.043
	(3.65 in.)	R-13	**13**	0.103	0.085	0.073	0.064	0.060	0.056	0.051	0.042
		R-19	**14**	0.065	0.057	0.051	0.047	0.045	0.043	0.039	0.034
		R-22	**15**	0.055	0.049	0.045	0.041	0.040	0.038	0.035	0.031
		R-25	**16**	0.047	0.043	0.040	0.037	0.036	0.034	0.032	0.028
		R-30	**17**	0.039	0.036	0.034	0.031	0.030	0.030	0.028	0.025
		R-38	**18**	0.030	0.028	0.027	0.025	0.025	0.024	0.023	0.021
		R-49	**19**	0.023	0.022	0.021	0.020	0.020	0.019	0.019	0.017
		R-60	**20**	0.019	0.018	0.017	0.017	0.016	0.016	0.016	0.015

Notes:

1 Continuous insulation shall be located at the ceiling or at the roof and be uninterrupted by framing.

2. In climate zones 1 and 16 the insulating R-value of continuous insulation materials installed above the roof waterproof membrane shall be multiplied times 0.8 before choosing the table column for determining assembly U-factor.

This table contains U-factors for metal-framed attic roofs, where the ceiling is the air barrier and the attic is ventilated. This construction assembly is similar to those that are covered by Table IV.2, except that metal framing members are substituted for the wood-framing members. The top chord of the truss is typically sloped, while the bottom chord is typically flat, although data from this table may be used for cases where the bottom chord of the truss is sloped. Blown insulation may not be used, however, if the bottom chord slopes more than 3:12.

For the majority of cases, values will be selected from column A of this table. Column A applies for the common situation where either batt or blown insulation is placed directly over the ceiling. Builders or designers may increase thermal performance by adding a continuous insulation layer at the ceiling. The continuous insulation is typically a rigid polystyrene or polyisocyurnate foam insulation. Continuous insulation does not include the blown or batt insulation that is over the bottom chord of the truss (this is already accounted for in the first column data).

When this table is used manually, the R-value of continuous insulation shall be equal to or greater than the R-value published in the continuous insulation columns. No interpolation is permitted when data from the table is used manually. CEC approved software, however, may determine the U-factor for any amount of continuous insulation and for unusual construction layers using Equation IV-1 and Equation IV-2.

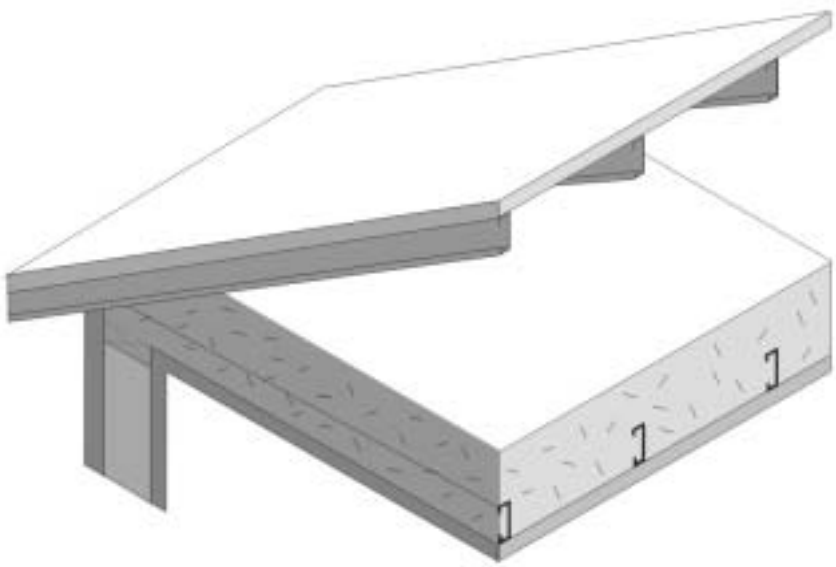

Figure IV.4 – Metal Framed Attic Roofs

Assumptions. These data are calculated using the zone method calculation documented in the 2001 ASHRAE Fundamentals. These calculations assume an exterior air film of R-0.17, asphalt shingles of R-0.44 (AR02), building paper of R-0.06 (BP01), ½” of plywood of R-0.63 (PW03), the attic air space (greater than 3.5”) of R-0.80, the insulation / framing layer, continuous insulation (if any) 1/2" gypsum of R-0.45 (GP01), and an interior air film (heat flow up) of R-0.61. The framing percentage is assumed to be 10% for 16 in. OC and 7% for 24 in. OC. 7.25% of the attic insulation above the framing members is assumed to be at half depth, due to decreased depth of insulation at the eaves. Steel framing has 1.5 inch flange and is 0.075 inch thick steel with no knockouts. U-factors calculated using EZ Frame 2.0B.

Table IV.5 – U-factors of Metal Framed Rafter Roofs

Spacing	R-Value of Insulation Between Framing	Nominal Framing Size		Rated R-value of Continuous Insulation[2]							
				R-0	R-2	R-4	R-6	R-7	R-8	R-10	R-14
				A	B	C	D	E	F	G	H
16 in. OC	None	Any	1	0.325	0.197	0.141	0.110	0.099	0.090	0.076	0.059
	R-11	2x6	2	0.123	0.099	0.082	0.071	0.066	0.062	0.055	0.045
	R-13	2x6	3	0.115	0.093	0.079	0.068	0.064	0.060	0.053	0.044
	R-19	2x8	4	0.096	0.081	0.069	0.061	0.057	0.054	0.049	0.041
	R-21	2x8	5	0.093	0.078	0.068	0.060	0.056	0.053	0.048	0.040
	R-25	2x10	6	0.084	0.072	0.063	0.056	0.053	0.050	0.046	0.039
	R-30 [1]	2x10	7	0.079	0.068	0.060	0.054	0.051	0.048	0.044	0.038
	R-30	2x12	8	0.076	0.066	0.058	0.052	0.050	0.047	0.043	0.037
	R-38 [1]	2x12	9	0.071	0.062	0.055	0.050	0.047	0.045	0.042	0.036
	R-38	2x14	10	0.068	0.060	0.053	0.048	0.046	0.044	0.040	0.035
	Sprayed Foam or Cellulose Insulation[3]	2x6	11	0.099	0.083	0.071	0.062	0.058	0.055	0.050	0.041
		2x8	12	0.087	0.074	0.065	0.057	0.054	0.051	0.047	0.039
		2x10	13	0.077	0.067	0.059	0.053	0.050	0.048	0.044	0.037
		2x12	14	0.069	0.061	0.054	0.049	0.047	0.044	0.041	0.035
		2x14	15	0.064	0.057	0.051	0.046	0.044	0.042	0.039	0.034
24 in. OC	None	Any	16	0.322	0.196	0.141	0.110	0.099	0.090	0.076	0.058
	R-11	2x6	17	0.107	0.088	0.075	0.065	0.061	0.058	0.052	0.043
	R-13	2x6	18	0.099	0.083	0.071	0.062	0.058	0.055	0.050	0.041
	R-19	2x8	19	0.080	0.069	0.061	0.054	0.051	0.049	0.044	0.038
	R-21	2x8	20	0.076	0.066	0.058	0.052	0.050	0.047	0.043	0.037
	R-25	2x10	21	0.068	0.060	0.053	0.048	0.046	0.044	0.040	0.035
	R-30 [1]	2x10	22	0.063	0.056	0.050	0.046	0.044	0.042	0.039	0.033
	R-30	2x12	23	0.061	0.054	0.049	0.045	0.043	0.041	0.038	0.033
	R-38 [1]	2x12	24	0.055	0.050	0.045	0.041	0.040	0.038	0.035	0.031
	R-38	2x14	25	0.053	0.048	0.044	0.040	0.039	0.037	0.035	0.030
	Sprayed Foam or Cellulose Insulation[3]	2x6	26	0.081	0.070	0.061	0.055	0.052	0.049	0.045	0.038
		2x8	27	0.070	0.061	0.055	0.049	0.047	0.045	0.041	0.035
		2x10	28	0.061	0.054	0.049	0.045	0.043	0.041	0.038	0.033
		2x12	29	0.054	0.049	0.044	0.041	0.039	0.038	0.035	0.031
		2x14	30	0.049	0.045	0.041	0.038	0.036	0.035	0.033	0.029

Notes:

1 A higher density fiberglass batt is needed to provide adequate room for ventilation.

2 Continuous insulation shall be located at the ceiling or at the roof and be uninterrupted by framing.

3 Foamed plastic or cellulose insulation shall fill the entire cavity. Cellulose shall have a binder to prevent sagging. Verify that the building official in your area permits this construction, since there is no ventilation layer.

4. In climate zones 1 and 16 the insulating R-value of continuous insulation materials installed above the roof waterproof membrane shall be multiplied times 0.8 before choosing the table column for determining assembly U-factor.

This table contains pre-calculated U-factors for metal-framed rafter roofs where the ceiling is the air barrier. This construction assembly is similar to that covered by Table IV.2 except that metal framing members are substituted for the wood-framing members. The rafters may be either flat or in a sloped application. Insulation is typically installed between the rafters. With this construction, the insulation is in contact with the ceiling and there is typically a one-inch air gap above the insulation so that moisture can be vented. Whether or not there is an air space above the insulation depends on local climate conditions and may not be required in some building permit jurisdictions. The building official will need to waive the air gap requirement in the case of cellulose insulation or sprayed foam.

U-factors are selected from Column A of this table when there is no continuous insulation. When continuous insulation is installed either at the ceiling or at the roof, then U-factors from other columns may be selected. The continuous insulation is typically a rigid polystyrene or polyisocyanurate foam insulation, but can also include mineral wool or other suitable materials.

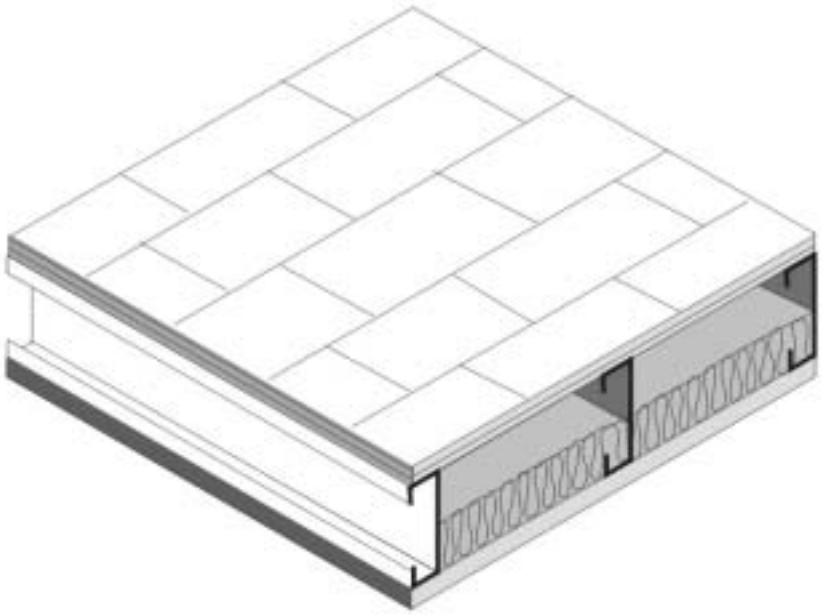

Figure IV.5 – Metal Framed Rafter Roof

When this table is used manually, the R-value of continuous insulation shall be equal to or greater than the R-value published in the continuous insulation columns. For instance if the insulation is R-3, the R-2 column shall be used. No interpolation is permitted when data from the table is used manually. CEC approved software, however, may determine the U-factor for any amount of continuous insulation and/or for unusual construction layers using Equation IV-1 and Equation IV-2.

Assumptions. These data are calculated using the zone calculation method documented in the 2001 ASHRAE Fundamentals. These calculations assume an exterior air film of R-0.17, asphalt shingles of R-0.44 (AR02), building paper of R-0.06 (BP01), ½" of plywood of R-0.63 (PW03), the insulation / framing layer, ½" gypsum of R-0.45 (GP01), and an interior air film (heat flow up diagonally) of R-0.62. The continuous insulation may either be located at the ceiling or over the structural deck. The thickness of framing members is assumed to be 3.50, 5.50, 7.25, 9.25, and 11.25 in. for 2x4, 2x6, 2x8, 2x10, and 2x12 nominal sizes. High-density batt insulation is assumed to be 8.5 in. thick for R-30 and 10.5 in thick for R-38. Framing spacing is 10 percent for 16 inches on center and 7 percent for 24 inches on center. Steel framing has 1.5 inch flange and is 0.075 inch thick steel with no knockouts. U-factors calculated using EZ Frame 2.0B.

Table IV.6 –U-factors for Span Deck and Concrete Roofs

			R-value of Continuous Insulation									
			None	R-4	R-6	R-8	R-10	R-12	R-15	R-20	R-25	R-30
Fireproofing	**Concrete Topping Over Metal Deck**		**A**	**B**	**C**	**D**	**E**	**F**	**G**	**H**	**I**	**J**
Yes	None	**1**	0.348	0.146	0.113	0.092	0.078	0.067	0.056	0.044	0.036	0.030
	2 in.	**2**	0.324	0.141	0.110	0.090	0.076	0.066	0.055	0.043	0.036	0.030
	4 in.	**3**	0.302	0.137	0.107	0.088	0.075	0.065	0.055	0.043	0.035	0.030
	6 in.	**4**	0.283	0.133	0.105	0.087	0.074	0.064	0.054	0.042	0.035	0.030
No	None	**5**	0.503	0.167	0.125	0.100	0.083	0.071	0.059	0.045	0.037	0.031
	2 in.	**6**	0.452	0.161	0.122	0.098	0.082	0.070	0.058	0.045	0.037	0.031
	4 in.	**7**	0.412	0.156	0.119	0.096	0.080	0.069	0.057	0.045	0.036	0.031
	6 in.	**8**	0.377	0.150	0.116	0.094	0.079	0.068	0.057	0.044	0.036	0.031

1. In climate zones 1 and 16 the insulating R-value of continuous insulation materials installed above the roof waterproof membrane shall be multiplied times 0.8 before choosing the table column for determining assembly U-factor.

The constructions in this table are typical of Type I and Type II steel framed or concrete nonresidential buildings. The construction consists of a metal deck with or without a concrete topping. It may also be used for a metal deck or even wood deck ceiling as long as the insulation is continuous. Fireproofing may be sprayed onto the underside of the metal deck; it also covers steel structural members. Insulation is typically installed above the structural deck and below the waterproof membrane. This table may also be used for reinforced concrete roofs that do not have a metal deck. In this case, the fireproofing will typically not be installed and choices from the table should be made accordingly.

When this table is used manually, the R-value of continuous insulation shall be equal to or greater than the R-value published in the continuous insulation columns. No interpolation is permitted when data from the table is used manually. CEC approved software, however, may determine the U-factor for any amount of continuous insulation and for unusual construction layers using Equation IV-1 and Equation IV-2. If the data is adjusted using Equation IV-2, the user shall take credit for a ceiling and the air space above the ceiling only if the ceiling serves as an air barrier. Suspended or T-bar ceilings do not serve as air barriers.

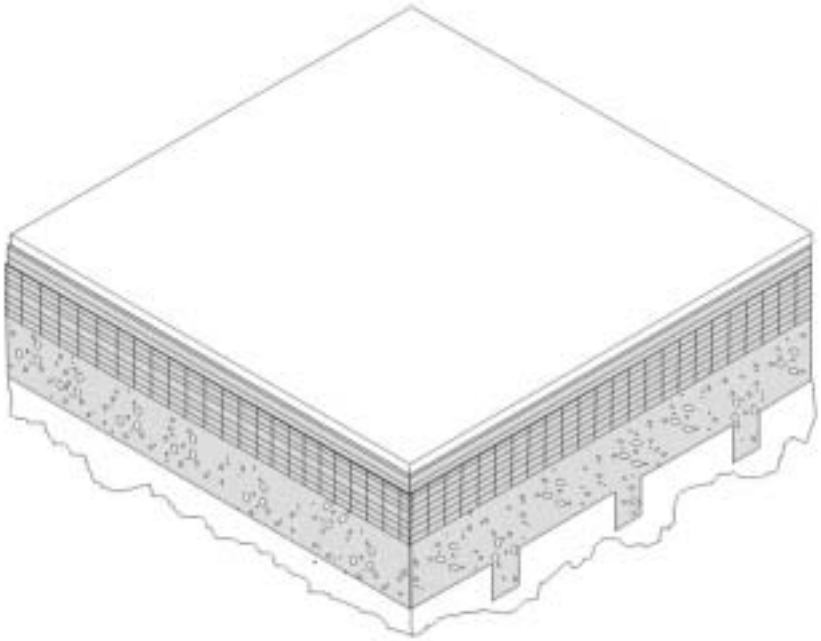

Figure IV.6 – Span Deck and Concrete Roof

Assumptions. These calculations are made using the parallel path method documented in the ASHRAE Fundamentals Handbook, 2001. The assembly is assumed to consist of an exterior air film of R-0.17, a single ply roofing membrane (R-0.15), protective board (R-1.06), continuous insulation (if any), concrete toping (if any), metal span deck (negligible), and fireproofing (R-0.88). While a suspended ceiling typically exists below the structure, this is not considered part of the construction assembly. The fireproofing is assumed to be equivalent to 60 lb/ft^3 concrete with a resistance of 0.44 per inch.

Table IV.7 – U-factors for Metal Building Roofs

Insulation System	R-Value of Insulation		Rated R-value of Continuous Insulation									
			R-0	R-4	R-6	R-8	R-10	R-12	R-15	R-20	R-25	R-30
			A	**B**	**C**	**D**	**E**	**F**	**G**	**H**	**I**	**J**
Screw Down Roofs (no Thermal Blocks)[2]	None	**1**	1.280	0.209	0.147	0.114	0.093	0.078	0.063	0.048	0.039	0.032
	R-10	**2**	0.153	0.095	0.080	0.069	0.060	0.054	0.046	0.038	0.032	0.027
	R-11	**3**	0.139	0.089	0.076	0.066	0.058	0.052	0.045	0.037	0.031	0.027
	R-13	**4**	0.130	0.086	0.073	0.064	0.057	0.051	0.044	0.036	0.031	0.027
	R-19	**5**	0.098	0.070	0.062	0.055	0.049	0.045	0.040	0.033	0.028	0.025
Standing Seam Roof with Single Layer of Insulation Draped over Purlins and Compressed. Thermal blocks at supports.[2]	R-10	**6**	0.097	0.070	0.061	0.055	0.049	0.045	0.040	0.033	0.028	0.025
	R-11	**7**	0.092	0.067	0.059	0.053	0.048	0.044	0.039	0.032	0.028	0.024
	R-13	**8**	0.083	0.062	0.055	0.050	0.045	0.042	0.037	0.031	0.027	0.024
	R-19	**9**	0.065	0.052	0.047	0.043	0.039	0.037	0.033	0.028	0.025	0.022
Standing Seam Roof with Double Layer of Insulation.[4] Thermal blocks at supports.[2]	R-10 + R-10	**10**	0.063	0.050	0.046	0.042	0.039	0.036	0.032	0.028	0.024	0.022
	R-10 + R-11	**11**	0.061	0.049	0.045	0.041	0.038	0.035	0.032	0.027	0.024	0.022
	R-11 + R-11	**12**	0.060	0.048	0.044	0.041	0.038	0.035	0.032	0.027	0.024	0.021
	R-10 + R-13	**13**	0.058	0.047	0.043	0.040	0.037	0.034	0.031	0.027	0.024	0.021
	R-11 + R-13	**14**	0.057	0.046	0.042	0.039	0.036	0.034	0.031	0.027	0.024	0.021
	R-13 + R-13	**15**	0.055	0.045	0.041	0.038	0.035	0.033	0.030	0.026	0.023	0.021
	R-10 + R-19	**16**	0.052	0.043	0.040	0.037	0.034	0.032	0.029	0.025	0.023	0.020
	R-11 + R-19	**17**	0.051	0.042	0.039	0.036	0.034	0.032	0.029	0.025	0.022	0.020
	R-13 + R-19	**17**	0.049	0.041	0.038	0.035	0.033	0.031	0.028	0.025	0.022	0.020
	R-19 + R-19	**18**	0.046	0.039	0.036	0.034	0.032	0.030	0.027	0.024	0.021	0.019
Filled Cavity with Thermal Blocks[2, 5]	R19 + R-10	**19**	0.041	0.035	0.033	0.031	0.029	0.027	0.025	0.023	0.020	0.018

Notes:

1. A roof must have metal purlins no closer than 4 ft on center to use this table. If the roof deck is attached to the purlins more frequently than 12 in oc, 0.008 must be added to the U-factors in this table.
2. Thermal blocks are an R-5 of rigid insulation, which extends 1" beyond the width of the purlin on each side.
3. Multiple R-values are listed in order from outside to inside. First layer is parallel to the purlins, and supported by a system; second layer is laid on top of the purlins.
4. In climate zones 1 and 16 the insulating R-value of continuous insulation materials installed above the roof waterproof membrane shall be multiplied times 0.8 before choosing the table column for determining assembly U-factor.

The U-factors in this table are intended for use with metal building roofs. This type of construction is typical for manufacturing and warehouse facilities, but is used for other building types as well. The typical method of insulating this type of building is to drape vinyl backed fiberglass insulation over the metal purlins before the metal deck is attached with metal screws. With this method, the insulation is compressed at the supports, reducing its effectiveness. The first part of the table contains values for this insulation technique. The second section of the table has data for the case when a thermal block is used at the support. The insulation is still compressed, but the thermal block, which generally consists of an 8 in. wide strip of foam insulation, improves the thermal performance. The third section of the table deals with systems that involve two layers of insulation.

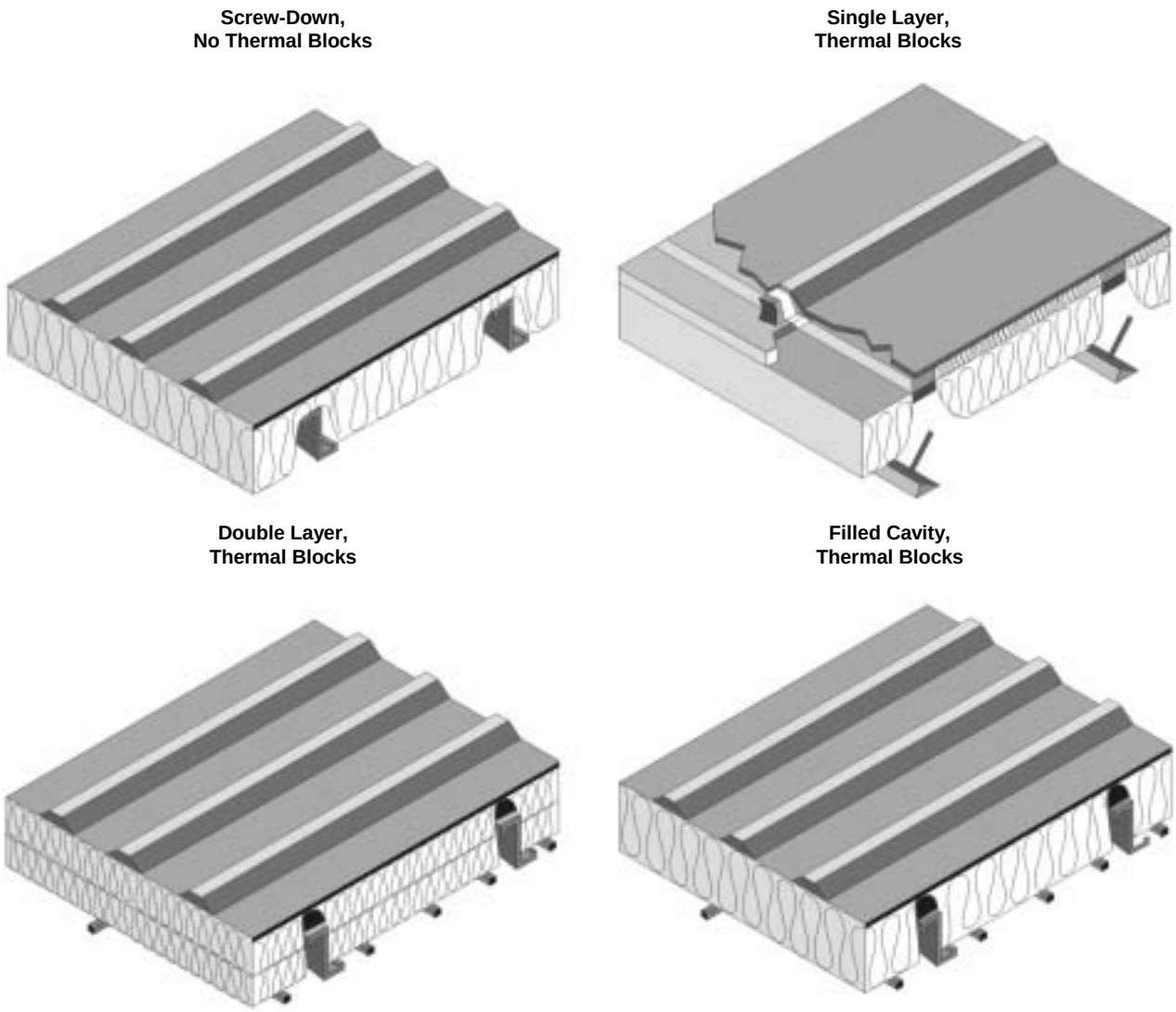

Figure IV.7 – Metal Building Roofs

For the majority of cases, values will be selected from column A of this table. Builders or designers may increase thermal performance by adding a continuous insulation layer between the metal decking and the structural supports. The continuous insulation is typically a rigid polystyrene or polyisocyanurate foam insulation.

When this table is used manually, the R-value of continuous insulation shall be equal to or greater than the R-value published in the continuous insulation columns. No interpolation is permitted when data from the table is used manually. CEC approved ACMs, however, may determine the U-factor for any amount of continuous insulation using Equation IV-1.

Assumptions. Data in Column A of this table is taken from the ASHRAE/IESNA Standard 90.1-2001, Appendix A. The data is also published in the NAIMA *Compliance for Metal Buildings*, 1997.

Table IV.8 – U-factors for Insulated Ceiling with Removable Panels

R-value of Insulation Over Suspended Ceiling		U-factor A
None	**1**	0.304
7	**2**	0.152
11	**3**	0.132
13	**4**	0.126
19	**5**	0.113
21	**6**	0.110
22	**7**	0.109
30	**8**	0.102
38	**9**	0.098
49	**10**	0.094
60	**11**	0.092

This table includes U-factors for the case of insulation placed over suspended ceilings. This situation is only permitted for a combined floor area no greater than 2,000 square feet in an otherwise unconditioned building, and when the average height of the space between the ceiling and the roof over these spaces is greater than 12 feet. The suspended ceiling does not provide an effective air barrier and leakage is accounted for in the calculations.

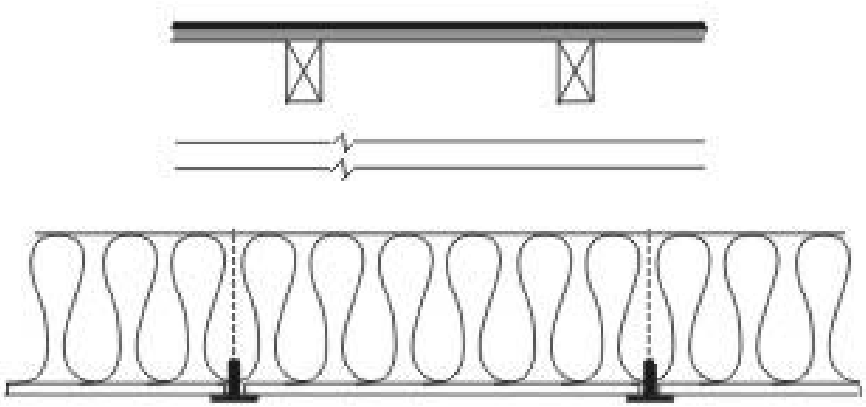

Figure IV.8 – Insulated Ceiling with Removable Panels

Assumptions. The procedure used to calculate these values is documented in the Nonresidential ACM Manual. These calculations assume an exterior air film of R-0.17, a built-up roof of R-0.33 (BR01), plywood of R-0.94 (PW05), a twelve foot air space of R-0.80, the insulation (for the insulated portion), removable ceiling panels with a R-0.50 and an interior air film (heat flow up) of R-0.61. 75% of the ceiling is assumed covered by insulation and the remainder is not insulated. The uninsulated portion includes lighting fixtures and areas where the insulation is not continuous. An adder of 0.005 is added to the resulting U-factor to account for infiltration through the suspended ceiling and lighting fixtures.

IV.3 Walls

Table IV.9 – U-factors of Wood Framed Walls

Spacing	Cavity Insulation	Nominal Framing Size		Rated R-value of Continuous Insulation [2]							
				R-0	R-2	R-4	R-6	R-7	R-8	R-10	R-14
				A	B	C	D	E	F	G	H
16 in. OC	None	Any	1	0.356	0.204	0.144	0.111	0.100	0.091	0.077	0.059
	R-11 batt	2x4	2	0.110	0.087	0.073	0.063	0.059	0.056	0.050	0.041
	R-13 batt	2x4	3	0.102	0.081	0.068	0.059	0.056	0.052	0.047	0.039
	R-15 batt	2x4	4	0.095	0.076	0.064	0.056	0.053	0.050	0.045	0.038
	R-19 batt 1	2x6	5	0.074	0.063	0.055	0.049	0.046	0.044	0.040	0.034
	R-21 batt	2x6	6	0.069	0.058	0.051	0.046	0.043	0.041	0.038	0.032
	R-19 batt	2x8	7	0.065	0.057	0.050	0.045	0.043	0.041	0.038	0.033
	R-22 batt	2x8	8	0.061	0.053	0.047	0.042	0.040	0.039	0.036	0.031
	R-25 batt	2x8	9	0.057	0.050	0.044	0.040	0.038	0.037	0.034	0.030
	R-30 batt 1	2x8	10	0.056	0.049	0.043	0.039	0.038	0.036	0.033	0.029
	R-30 batt	2x10	11	0.047	0.042	0.038	0.035	0.034	0.032	0.030	0.027
	R-38 batt 1	2x10	12	0.046	0.041	0.037	0.034	0.033	0.031	0.029	0.026
	R-38 batt	2x12	13	0.039	0.035	0.032	0.030	0.029	0.028	0.026	0.023
	Foamed Plastic or Cellulose Insulation3	2x4	14	0.103	0.082	0.069	0.060	0.056	0.053	0.048	0.040
		2x6	15	0.071	0.060	0.052	0.047	0.044	0.042	0.039	0.033
		2x8	16	0.056	0.049	0.043	0.039	0.038	0.036	0.033	0.029
		2x10	17	0.045	0.040	0.036	0.033	0.032	0.031	0.029	0.025
		2x12	18	0.038	0.034	0.031	0.029	0.028	0.027	0.025	0.023
24 in. OC	None	Any	19	0.362	0.207	0.145	0.112	0.101	0.092	0.077	0.059
	R-11 batt	2x4	20	0.106	0.085	0.072	0.062	0.058	0.055	0.049	0.041
	R-13 batt	2x4	21	0.098	0.079	0.067	0.058	0.055	0.052	0.046	0.039
	R-15 batt	2x4	22	0.091	0.073	0.062	0.055	0.051	0.049	0.044	0.037
	R-19 batt	2x6	23	0.071	0.061	0.053	0.047	0.045	0.043	0.039	0.034
	R-21 batt	2x6	24	0.066	0.056	0.049	0.044	0.042	0.040	0.037	0.032
	R-19 batt	2x8	25	0.063	0.055	0.049	0.044	0.042	0.040	0.037	0.032
	R-22 batt	2x8	26	0.058	0.051	0.046	0.041	0.040	0.038	0.035	0.030
	R-25 batt	2x8	27	0.055	0.048	0.043	0.039	0.037	0.036	0.033	0.029
	R-30 batt 1	2x8	28	0.054	0.047	0.042	0.038	0.037	0.035	0.033	0.028
	R-30 batt	2x10	29	0.045	0.041	0.037	0.034	0.033	0.031	0.029	0.026
	R-38 batt 1	2x10	30	0.044	0.039	0.036	0.033	0.032	0.031	0.029	0.025
	R-38 batt	2x12	31	0.037	0.034	0.031	0.029	0.028	0.027	0.025	0.023
	Foamed Plastic or Cellulose Insulation3	2x4	32	0.099	0.080	0.067	0.059	0.055	0.052	0.047	0.039
		2x6	33	0.069	0.059	0.051	0.046	0.044	0.042	0.038	0.033
		2x8	34	0.054	0.048	0.043	0.039	0.037	0.035	0.033	0.029
		2x10	35	0.044	0.039	0.036	0.033	0.031	0.030	0.028	0.025
		2x12	36	0.036	0.033	0.031	0.028	0.027	0.027	0.025	0.022

Notes

1. Higher density fiberglass batt is required in these cases.
2. Continuous insulation may be installed on either the inside or the exterior of the wall, or both.
3. Foamed plastic and cellulose shall fill the entire cavity. Cellulose shall have a binder to prevent sagging.

This table contains U-factors for wood framed walls, which are typical of low-rise residential buildings and Type V nonresidential buildings. If continuous insulation is not used, then choices are made from Column A. In this case, the insulation is installed between the framing members. When continuous insulation is also used, this is typically installed on the exterior side of the wall, but can also be used on the inside. The continuous insulation is typically a rigid polystyrene or polyisocyanurate foam insulation.

When this table is used manually, the R-value of continuous insulation shall be equal to or greater than the R-value published in the continuous insulation columns. Continuous insulation of at least R-2 must exist in order to use this table. No interpolation is permitted when data from the table is used manually. CEC approved software, however, may determine the U-factor for any amount of continuous insulation or for unusual construction assemblies using Equation IV-1 and Equation IV-2.

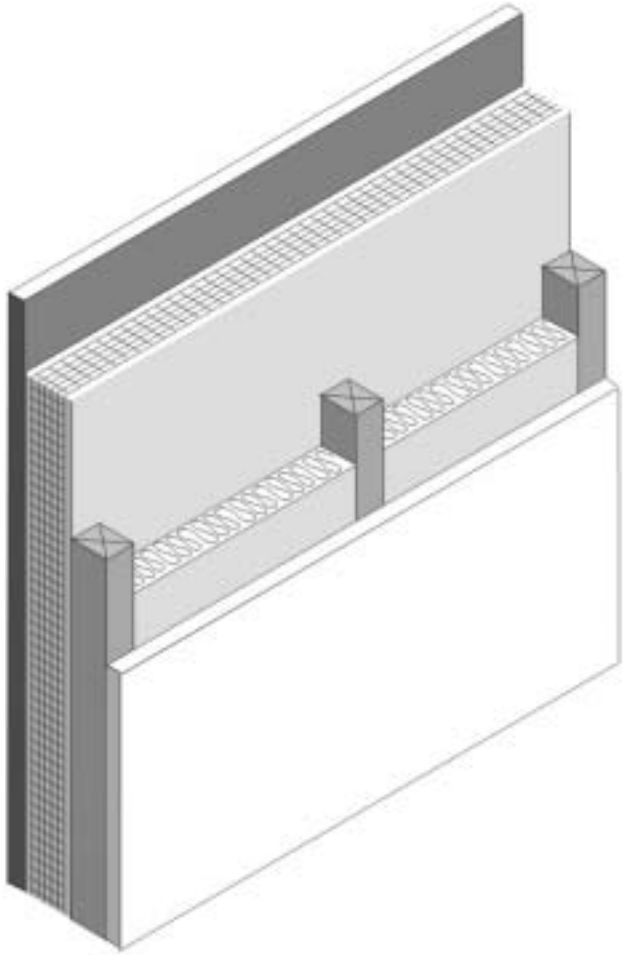

Figure IV.9 – Wood Framed Wall

Assumptions. Values in this table were calculated using the parallel heat flow calculation method, documented in the ASHRAE Fundamentals Handbook, 2001. The construction assembly assumes an exterior air film of R-0.17, a 7/8" layer of stucco of R-0.18 (SC01), building paper of R-0.06 (BP01), continuous insulation (if any), the cavity insulation / framing layer, 1/2" gypsum board of R-0.45 (GP01), and an interior air film 0.68. The framing factor is assumed to be 25% for 16 in. stud spacing and 22% for 24 in. spacing. Foam plastic and cellulose are assumed to entirely fill the cavity and have a thermal resistance of R-3.6 per inch. Actual cavity depth is 3.5 in. for 2x4, 5.5 in. for 2x6, 7.25 in for 2x8, 9.25 in. for 2x10, and 11.25 in. for 2x12. High density R-30 insulation is assumed to be 8.5 in. thick batt and R-38 is assumed to be 10.5 in. thick.

Table IV.10 – U-factors of Structurally Insulated Wall Panels (SIPS)

Type	Insulation R-value	Framing or Spline Spacing		Rated R-value of Continuous Insulation [2]							
				None	R-2	R-4	R-6	R-7	R-8	R-10	R-14
				A	B	C	D	E	F	G	H
Wood Spacers	R-14[1]	48 in. o.c.	**1**	0.069	0.061	0.054	0.049	0.047	0.045	0.041	0.035
	R-22	48 in. o.c.	**2**	0.049	0.045	0.041	0.038	0.037	0.035	0.033	0.029
	R-26	48 in o.c.	**3**	0.047	0.043	0.040	0.037	0.035	0.034	0.032	0.028
	R-28	48 in o.c.	**4**	0.039	0.036	0.034	0.032	0.031	0.030	0.028	0.025
	R-36	48 in o.c.	**5**	0.032	0.030	0.028	0.027	0.026	0.025	0.024	0.022
	R-40	48 in o.c.	**6**	0.033	0.031	0.029	0.028	0.027	0.026	0.025	0.023
	R-44	48 in o.c.	**7**	0.027	0.026	0.024	0.023	0.023	0.022	0.021	0.020
OSB Spline	R-14[1]	48 in. o.c.	**8**	0.065	0.058	0.052	0.047	0.045	0.043	0.039	0.034
	R-22	48 in. o.c.	**9**	0.048	0.044	0.040	0.037	0.036	0.035	0.032	0.029
	R-26	48 in o.c.	**10**	n.a.	n.a.	n.a.	n.a.	n.a.	n.a.	n.a.	n.a.
	R-28	48 in o.c.	**11**	0.038	0.036	0.033	0.031	0.030	0.029	0.028	0.025
	R-36	48 in o.c.	**12**	0.030	0.029	0.027	0.026	0.025	0.024	0.023	0.021
	R-40	48 in o.c.	**13**	n.a.	n.a.	n.a.	n.a.	n.a.	n.a.	n.a.	n.a.
	R-44	48 in o.c.	**14**	0.025	0.024	0.023	0.022	0.022	0.021	0.020	0.019

Notes:

1. The insulation R-value must be at least R-14 in order to use this table.

2 For credit, continuous insulation shall be at least R-2 and may be installed on either the inside or the exterior of the wall.

This table gives U-factors for structurally insulated panels used in wall construction. This is a construction system that consists of rigid foam insulation sandwiched between two layers of plywood or oriented strand board (OSB). Data is provided for two variations of this system. The system labeled “Wood Framing” uses wood spacers to separate the plywood or OSB boards and provide a means to connect the panels with mechanical fasteners. The system labeled “OSB Spline” uses splines to connect the panels so that framing members does not penetrate the insulation.

If continuous insulation is not used, then choices are made from Column A. When continuous insulation is also used, this is typically installed on the exterior side of the wall, but can also be used on the inside. The continuous insulation is typically a rigid polystyrene or polyisocyanurate foam insulation. Adding continuous insulation to a SIPS panel is highly unusual since the panel itself is mostly continuous insulation.

When this table is used manually, the R-value of continuous insulation shall be equal to or greater than the R-value published in the continuous insulation columns. Continuous insulation of at least R-2 must exist in order to use this table. No interpolation is permitted when data from the table is used manually. CEC approved software, however, may determine the U-factor for any amount of continuous insulation or for unusual construction assemblies using Equation IV-1 and Equation IV-2.

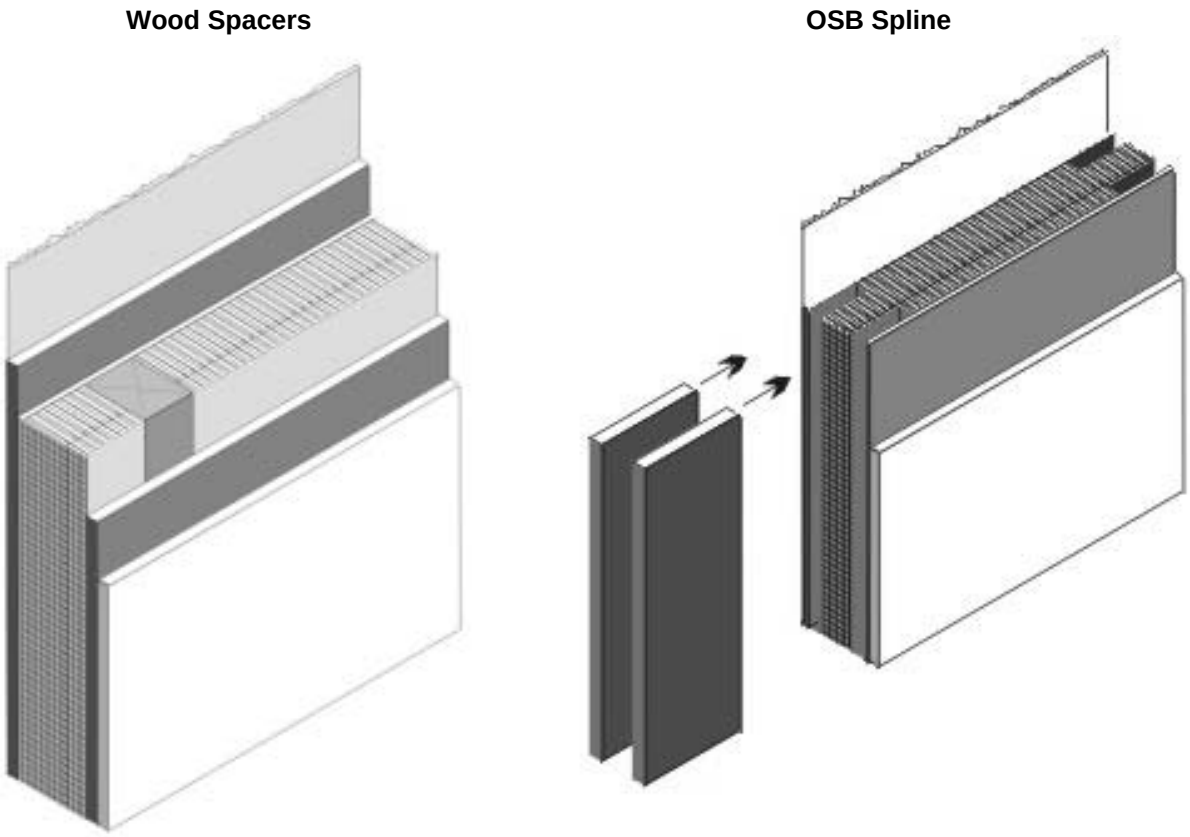

Figure IV.10 – Structurally Insulated Wall Panels (SIPS)

Assumptions: These data are calculated using the parallel path method documented in the 2001 ASHRAE Fundamentals. These calculations assume an exterior air film of R-0.17, a 7/8" layer of stucco of R-0.18, building paper of R-0.06 (BP01), 7/16" of OSB, insulation (as specified), 7/16" of OSB, 1/2" gypsum board of R-0.45 (GP01), and an interior air film 0.68. A framing factor of 13% is assumed for wood spacers and 7% for the OSB spline system. Framing includes the sill plate, the header and framing around windows and doors.

Table IV.11 – U-factors of Metal Framed Walls

Spacing	Cavity Insulation R-Value:	Nominal Framing Size		Rated R-value of Continuous Insulation [2]							
				R-0	R-2	R-4	R-6	R-7	R-8	R-10	R-14
				A	B	C	D	E	F	G	H
16 in. OC	None	Any	**1**	0.458	0.239	0.162	0.122	0.109	0.098	0.082	0.062
	R-11	2x4	**2**	0.224	0.155	0.118	0.096	0.087	0.080	0.069	0.054
	R-13	2x4	**3**	0.217	0.151	0.116	0.094	0.086	0.079	0.068	0.054
	R-15	2x4	**4**	0.211	0.148	0.114	0.093	0.085	0.078	0.068	0.053
	R-19[1]	2x6	**5**	0.183	0.134	0.106	0.087	0.080	0.074	0.065	0.051
	R-21	2x6	**6**	0.178	0.131	0.104	0.086	0.079	0.073	0.064	0.051
	R-19	2x8	**7**	0.164	0.123	0.099	0.083	0.076	0.071	0.062	0.050
	R-22	2x8	**8**	0.160	0.121	0.098	0.082	0.075	0.070	0.062	0.049
	R-25	2x8	**9**	0.158	0.120	0.097	0.081	0.075	0.070	0.061	0.049
	R-30[1]	2x8	**10**	0.157	0.119	0.096	0.081	0.075	0.070	0.061	0.049
	R-30	2x10	**11**	0.140	0.109	0.090	0.076	0.071	0.066	0.058	0.047
	R-38[1]	2x10	**12**	0.139	0.109	0.089	0.076	0.070	0.066	0.058	0.047
	R-38	2 x 12	**13**	0.124	0.099	0.083	0.071	0.066	0.062	0.055	0.045
	Foamed Plastic or Cellulose Insulation[3]	2 x 4	**14**	0.218	0.152	0.116	0.094	0.086	0.079	0.069	0.054
		2 x 6	**15**	0.179	0.132	0.104	0.086	0.079	0.074	0.064	0.051
		2 x 8	**16**	0.157	0.119	0.096	0.081	0.075	0.070	0.061	0.049
		2 x 10	**17**	0.138	0.108	0.089	0.075	0.070	0.066	0.058	0.047
		2 x 12	**18**	0.123	0.099	0.082	0.071	0.066	0.062	0.055	0.045
24 in. OC	None	Any	**24**	0.455	0.238	0.161	0.122	0.109	0.098	0.082	0.062
	R-11	2x4	**25**	0.210	0.148	0.114	0.093	0.085	0.078	0.068	0.053
	R-13	2x4	**26**	0.203	0.144	0.112	0.092	0.084	0.077	0.067	0.053
	R-15	2x4	**27**	0.197	0.141	0.110	0.090	0.083	0.076	0.066	0.052
	R-19[1]	2x6	**28**	0.164	0.123	0.099	0.083	0.076	0.071	0.062	0.050
	R-21	2x6	**29**	0.161	0.122	0.098	0.082	0.076	0.070	0.062	0.049
	R-19	2x8	**30**	0.153	0.117	0.095	0.080	0.074	0.069	0.060	0.049
	R-22	2x8	**21**	0.149	0.115	0.093	0.079	0.073	0.068	0.060	0.048
	R-25	2x8	**32**	0.147	0.114	0.093	0.078	0.072	0.068	0.060	0.048
	R-30[1]	2x8	**33**	0.146	0.113	0.092	0.078	0.072	0.067	0.059	0.048
	R-30	2x10	**34**	0.130	0.103	0.086	0.073	0.068	0.064	0.057	0.046
	R-38[1]	2x10	**35**	0.128	0.102	0.085	0.072	0.068	0.063	0.056	0.046
	R-38	2 x 12	**36**	0.115	0.093	0.079	0.068	0.064	0.060	0.053	0.044
	Foamed Plastic or Cellulose Insulation[3]	2 x 4	**37**	0.204	0.145	0.112	0.092	0.084	0.078	0.067	0.053
		2 x 6	**38**	0.167	0.125	0.100	0.083	0.077	0.071	0.063	0.050
		2 x 8	**39**	0.146	0.113	0.092	0.078	0.072	0.067	0.059	0.048
		2 x 10	**40**	0.128	0.102	0.085	0.072	0.068	0.063	0.056	0.046
		2 x 12	**41**	0.114	0.093	0.078	0.068	0.063	0.060	0.053	0.044

Notes

1. Higher density fiberglass batt is required in these cases.
2. Continuous insulation may be installed on either the inside or the exterior of the wall, or both.
3. Foamed plastic and cellulose shall fill the entire cavity. Cellulose shall have a binder to prevent sagging.

This table contains U-factors for steel or metal-framed walls, which are typical of nonresidential buildings. The table may be used for any construction assembly where the primary insulation is installed in a metal-framed wall, e.g. uninsulated curtain walls with metal furring on the inside.

If continuous insulation is not used, then choices are made from Column A. In this case, the insulation is installed only between the framing members. When continuous insulation is also used, it is typically installed on the exterior side of the wall, but can also be used on the inside. The continuous insulation is typically a rigid polystyrene or polyisocyanurate foam insulation.

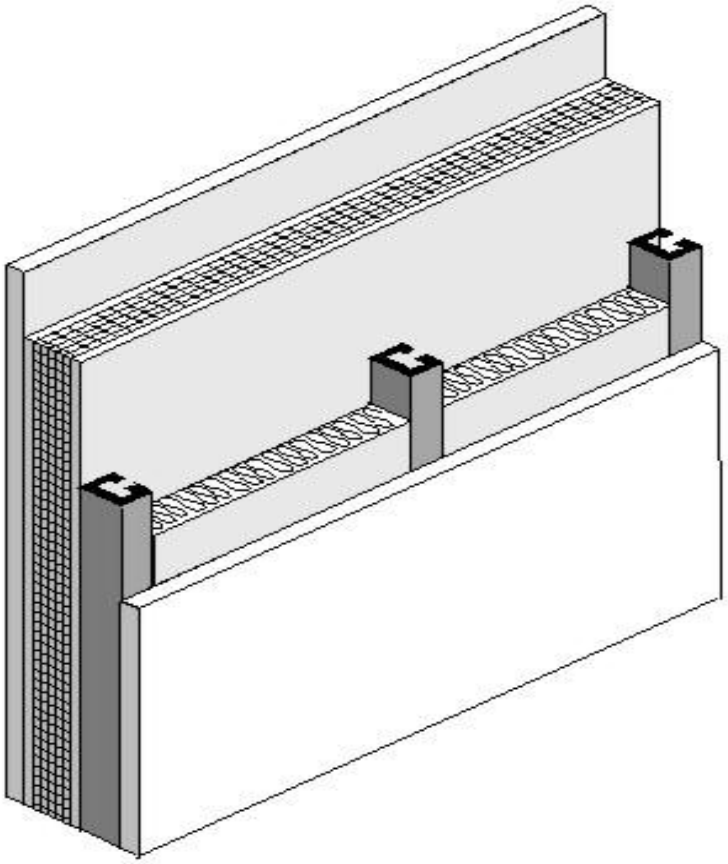

Figure IV.11 – Metal Framed Wall

When this table is used manually, the R-value of continuous insulation shall be equal to or greater than the R-value published in the continuous insulation columns. Continuous insulation of at least R-2 must exist in order to use values for continuous insulation. No interpolation is permitted when data from the table is used manually. CEC approved ACMs, however, may determine the U-factor for any amount of continuous insulation or for unusual construction assemblies using Equation IV-1 and Equation IV-2.

Assumptions. Values in this table were calculated using the zone calculation method. The construction assembly assumes an exterior air film of R-0.17, a 7/8" layer of stucco of R-0.18, building paper of R-0.06 (BP01), continuous insulation (if any), the insulation / framing layer, 1/2" gypsum of R-0.45 gypsum board (GP01), and an interior air film 0.68. The framing factor is assumed to be 25% for 16 in. stud spacing and 22% for 24 in. spacing. The internal default framing percentages are 15% for 16 in. stud spacing and 12% for 24 in. spacing. To account for the increased wall framing percentage the frame spacing input to the EZ Frame program is reduced to 13.218 inches for 16 in. stud spacing and 15.231 inches for 24 in. stud spacing. Foam plastic and cellulose are assumed to entirely fill the cavity and have a thermal resistance of R-3.6 per inch. Actual cavity depth is 3.5 in. for 2x4, 5.5 in. for 2x6, 7.25 in for 2x8, 9.25 in. for 2x10, and 11.25 in. for 2x12. High density R-30 insulation is assumed to be 8.5 in. thick batt and R-38 is assumed to be 10.5 in. thick.

Table IV.12 – Properties of Hollow Unit Masonry Walls

			Partly Grouted with Ungrouted Cells								
			Solid Grout			Empty			Insulated		
Thickness	**Type**		A			B			C		
		1	U-factor	C-factor	HC	U-factor	C-factor	HC	U-factor	C-factor	HC
12"	LW CMU	**2**	0.51	0.90	23	0.43	0.68	14.8	0.30	0.40	14.8
	MW CMU	**3**	0.54	1.00	23.9	0.46	0.76	15.6	0.33	0.46	15.6
	NW CMU	**4**	0.57	1.11	24.8	0.49	0.84	16.5	0.36	0.52	16.5
10"	LW CMU	**5**	0.55	1.03	18.9	0.46	0.76	12.6	0.34	0.48	12.6
	MW CMU	**6**	0.59	1.18	19.7	0.49	0.84	13.4	0.37	0.54	13.4
	NW CMU	**7**	0.62	1.31	20.5	0.52	0.93	14.2	0.41	0.63	14.2
8"	LW CMU	**8**	0.62	1.31	15.1	0.50	0.87	9.9	0.37	0.54	9.9
	MW CMU	**9**	0.65	1.45	15.7	0.53	0.96	10.5	0.41	0.63	10.5
	NW CMU	**10**	0.69	1.67	16.3	0.56	1.07	11.1	0.44	0.70	11.1
	Clay Unit	**11**	0.57	1.11	15.1	0.47	0.78	11.4	0.39	0.58	11.4
6"	LW CMU	**12**	0.68	1.61	10.9	0.54	1.00	7.9	0.44	0.70	7.9
	MW CMU	**13**	0.72	1.86	11.4	0.58	1.14	8.4	0.48	0.81	8.4
	NW CMU	**14**	0.76	2.15	11.9	0.61	1.27	8.9	0.52	0.93	8.9
	Clay Unit	**15**	0.65	1.45	11.1	0.52	0.93	8.6	0.45	0.73	8.6

The walls addressed in this table are rarely used in residential construction, but are common in some types of nonresidential construction. The tables include four types of hollow masonry units: lightweight concrete masonry units (CMU), medium weight CMU, normal weight CMU, and hollow clay masonry units. ASTM C-90 defines these masonry products in more detail.

Masonry used in California must be reinforced to withstand wind loads and earthquakes. This is achieved by installing reinforcing steel and grouting the cells in both a vertical and horizontal direction. Since grouting the cells affects thermal performance, data is provided for three cases: where every cell is grouted, where the cells are partially grouted and the remaining cells are left empty, and where the cells are partially grouted and the remaining cells are filled with perlite or some other insulating material.

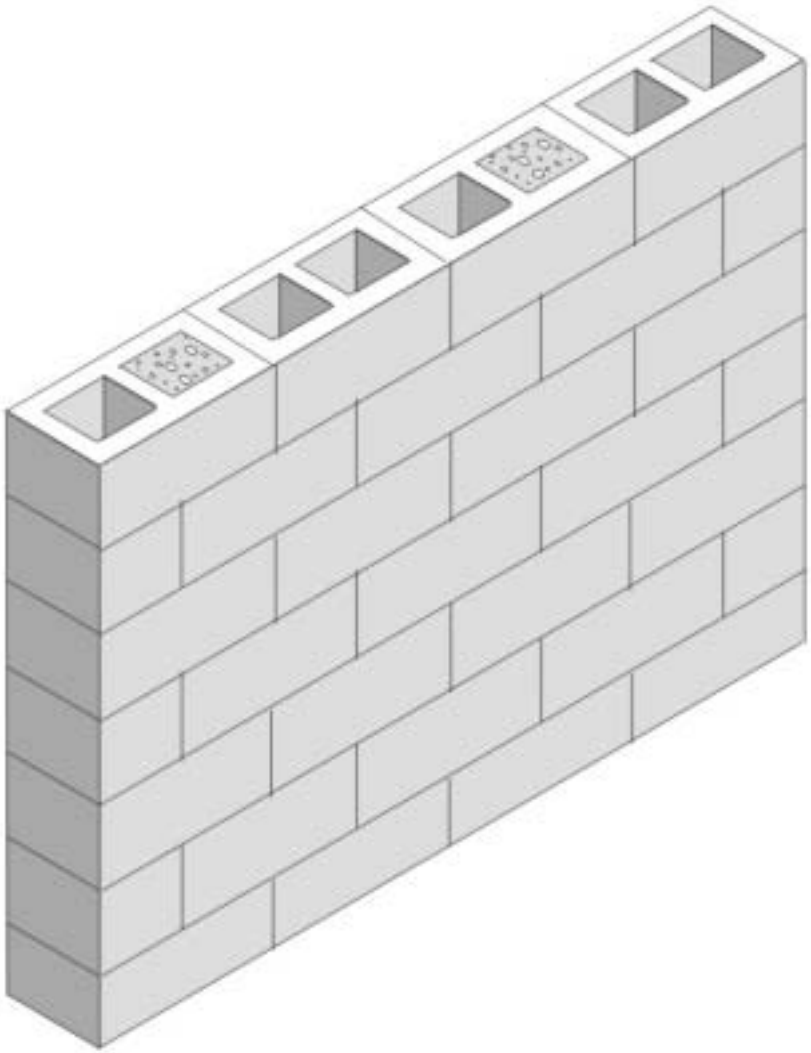

Figure IV.12 – Masonry Wall

For each of these conditions the U-factor, C-factor and heat capacity (HC) is published. There are other properties of mass materials that may be needed in compliance calculations, but these values can be determined from the published data using the procedures in Modeling Constructions in the Nonresidential ACM contained at the end of this appendix.

Assumptions: Data is taken from *Energy Calculations and Data*, CMACN, 1986, Berkeley Solar Group; Concrete Masonry Association of California and Nevada. The density of the CMU material (not counting the grouted or hollow cells) is 105 lb/ft³ for lightweight, 115 lb/ft³ for medium weight and 125 lb/ft³ for normal weight. The density of the clay unit material is 130 lb/ft³. For all four types of masonry units, data is provided for thicknesses of 6 in., 8 in., 10 in., and 12 in. For the partially grouted cases, vertical cells are assumed to be grouted at 32 in. OC. Reinforcing in the horizontal direction is at 48 in. OC. Wall thicknesses given in the table are nominal; actual thicknesses are 3/8 in. less. Insulating material inside unit masonry hollow is assumed to be perlite.

Table IV.13 – Properties of Solid Unit Masonry and Solid Concrete Walls

			Wall Thickness, inches									
			3	**4**	**5**	**6**	**7**	**8**	**9**	**10**	**11**	**12**
Type	**Property**		**A**	**B**	**C**	**D**	**E**	**F**	**G**	**H**	**I**	**J**
LW CMU	U-Factor		na	0.71	0.64	na	na	na	na	na	na	na
	C-Factor	**1**	na	1.79	1.40	na	na	na	na	na	na	na
	HC		na	7.00	8.75	na	na	na	na	na	na	na
MW CMU	U-Factor		na	0.76	0.70	na	na	na	na	na	na	na
	C-Factor	**2**	na	2.15	1.73	na	na	na	na	na	na	na
	HC		na	7.67	9.58	na	na	na	na	na	na	na
NW CMU	U-Factor		0.89	0.82	0.76	na	na	na	na	na	na	na
	C-Factor	**3**	3.66	2.71	2.15	na	na	na	na	na	na	na
	HC		6.25	8.33	10.42	na	na	na	na	na	na	na
Clay Brick	U-Factor		0.80	0.72	0.66	na	na	na	na	na	na	na
	C-Factor	**4**	2.50	1.86	1.50	na	na	na	na	na	na	na
	HC		6.30	8.40	10.43	na	na	na	na	na	na	na
Concrete	U-Factor		0.96	0.91	0.86	0.82	0.78	0.74	0.71	0.68	0.65	0.63
	C-Factor	**5**	5.22	4.02	3.20	2.71	2.31	1.99	1.79	1.61	1.45	1.36
	HC		7.20	9.60	12.00	14.40	16.80	19.20	21.60	24.00	26.40	28.80

This table provides thermal performance information for solid masonry units and solid concrete walls.

The walls addressed in this table are rarely used in residential construction, but are common in some types of nonresidential construction. The tables include four types of hollow masonry units: lightweight concrete masonry units (CMU), medium weight CMU, normal weight CMU, and hollow clay masonry units. ASTM C-90 defines these masonry products in more detail.

Masonry used in California must be reinforced to withstand wind loads and earthquakes. This is achieved by installing reinforcing steel and grouting the cells in both a vertical and horizontal direction. Since grouting the cells affects thermal performance, data is provided for three cases: where every cell is grouted, where the cells are partially grouted and the remaining cells are left empty, and where the cells are partially grouted and the remaining cells are filled with perlite or some other insulating material.

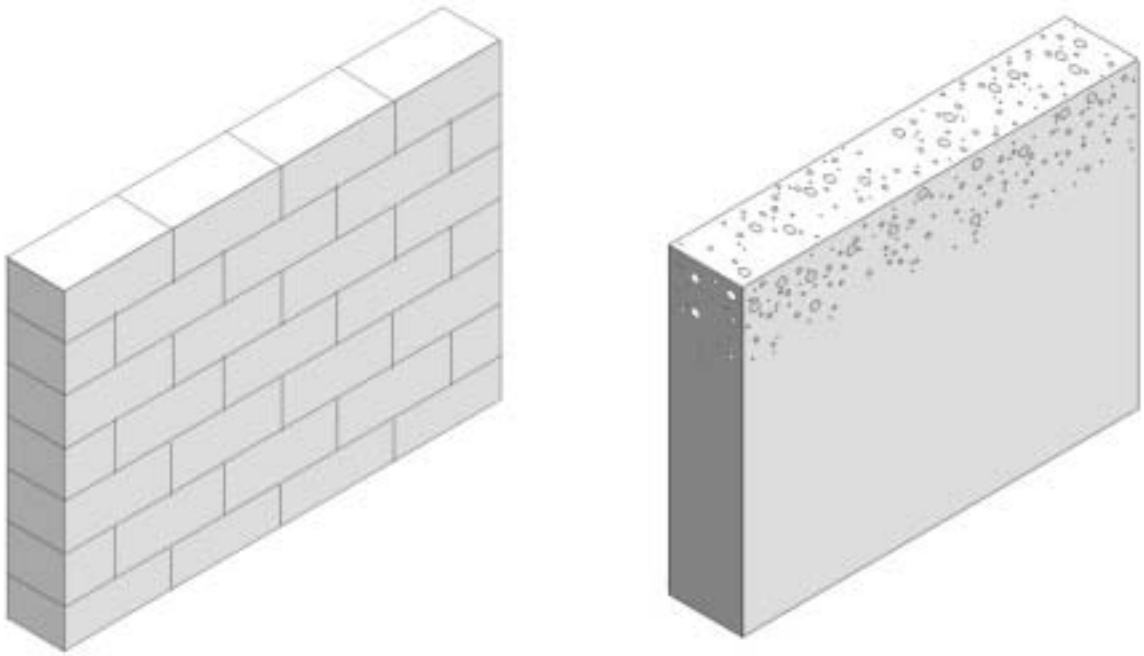

Figure IV.13 – Solid Unit Masonry (left) and Solid Concrete (right) Walls

For each of these conditions the U-factor, C-factor and heat capacity (HC) is published. There are other properties of mass materials that may be needed in compliance calculations, but these values can be determined from the published data using the procedures in Modeling Constructions in the Nonresidential ACM contained at the end of ACM Joint Appendix IV.

When insulation is added to the outside of masonry walls and/or when the inside is furred and insulated, the performance data in this table may be adjusted using Equation IV-4 and Equation IV-5.

Assumptions: Data is taken from *Energy Calculations and Data*, CMACN, 1986, Berkeley Solar Group; Concrete Masonry Association of California and Nevada. The density of the CMU material is 105 lb/ft^3 for lightweight, 115 lb/ft^3 for medium weight and 125 lb/ft^3 for normal weight. The density of the clay unit material is 130 lb/ft^3 and the density of the concrete is 144 lb/ft^3. For all four types of masonry units, data is provided for thicknesses of 3 in., 4 in., and 5 in. ASTM C-90 provides more information on the classification of masonry walls.

Table IV.14 – Properties of Concrete Sandwich Panels

Percent Concrete Web	Steel Penetrates Insulation	Performance Factor		Insulation Thickness (R-value)				
				1.5 (7.0)	**2.0 (9.3)**	**3.0 (14.0)**	**4.0 (18.6)**	**6.0 (27.9)**
				A	**B**	**C**	**D**	**E**
0%	No	U-factor	**1**	0.122	0.095	0.066	0.051	0.034
		C-factor		0.136	0.104	0.070	0.053	0.035
		HC		16.13	16.13	16.13	16.13	16.13
	Yes	U-factor	**2**	0.164	0.128	0.091	0.070	0.048
		C-factor		0.190	0.144	0.099	0.074	0.050
		HC		16.13	16.13	16.13	16.13	16.13
10%	No	U-factor	**3**	0.476	0.435	0.345	0.286	0.217
		C-factor		0.800	0.690	0.488	0.377	0.267
		HC		16.53	16.66	16.93	17.20	17.74
	Yes	U-factor	**4**	0.500	0.435	0.357	0.303	0.227
		C-factor		0.870	0.690	0.513	0.408	0.282
		HC		16.53	16.66	16.93	17.20	17.74
20%	No	U-factor	**5**	0.588	0.556	0.476	0.417	0.333
		C-factor		1.176	1.053	0.800	0.645	0.465
		HC		16.93	17.20	17.74	18.28	19.35
	Yes	U-factor	**6**	0.588	0.556	0.476	0.417	0.333
		C-factor		1.176	1.053	0.800	0.645	0.465
		HC		16.93	17.20	17.74	18.28	19.35

This table provides U-factors, C-factors, and heat capacity (HC) data for concrete sandwich panels. Concrete sandwich panels, as the name suggests, consist of two layers of concrete that sandwich a layer of insulation. The wall system can be constructed in the field or in a factory. One method of field construction is where the wall panels are formed in a flat position using the concrete floor slab of the building as the bottom surface. After the panel has set, it is hoisted with a crane into its final vertical position.

Both the percent of concrete web and the percent steel are factors in determining the thermal performance of walls. The insulation layer in this type of concrete sandwich panel generally does not extend over the entire surface of the wall. To provide structural integrity, a certain portion of the wall is solid concrete, which ties together the two concrete layers. This portion is known as the concrete web. The thermal performance of concrete sandwich panels depends on the percent of the wall that is concrete web. Data is provided for concrete webs representing 0%, 10% and 20% of the opaque wall surface. In some cases, the concrete layers are tied together by structural steel that penetrates the insulation layer. Data is provided for the case where this steel is present and for cases where it is not.

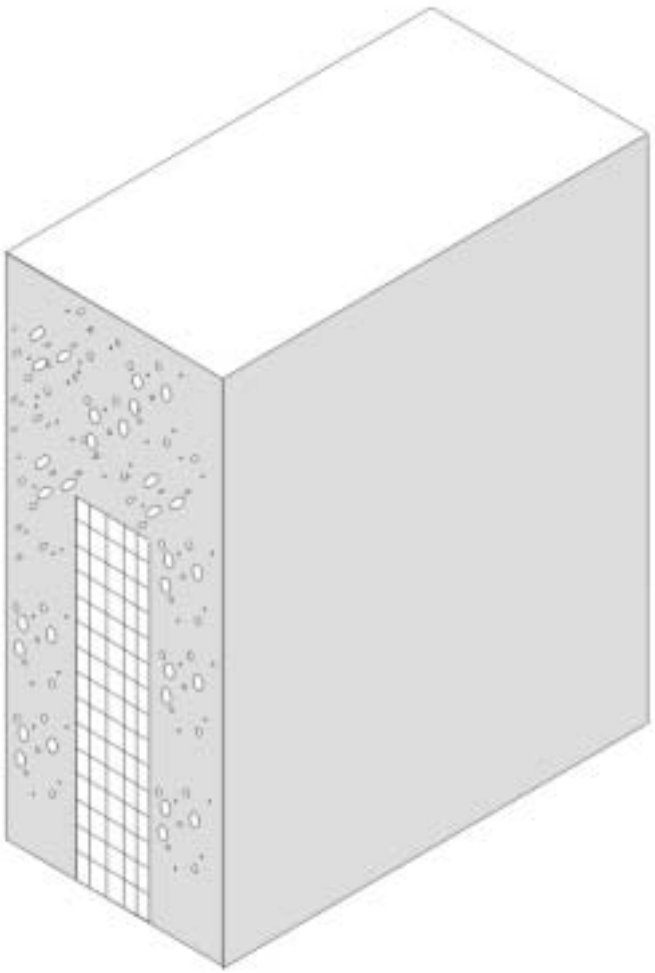

Figure IV.14 – Concrete Sandwich Panel

Other properties of mass materials such as density, conductivity, specific heat and wall weight may be needed in compliance calculations and these properties may be determined from the published data using the procedures in Modeling Constructions in the Nonresidential ACM contained at the end of this ACM Joint Appendix IV.

Values from this table may be combined with values from Table IV.14 when a furring layer is added to the inside of the wall and/or continuous insulation is added to the outside of the wall. Adjustments for additional layers shall follow the procedure of Equation IV-4 and Equation IV-5.

Assumptions. U-factors include an inside air film of 0.68 and an exterior air film of 0.17. Conductivity of the concrete is assumed to be 0.215 Btu/h-ºF-f, density is 150 lb/ft³, the thickness of each side of the sandwich panel is 0.5 ft. The data was calculated by Construction Technologies Laboratories, Inc. and published in the Thermal Mass Handbook, Concrete and Masonry Design Provisions Using ASHRAE/IESNA 90.1-1989, National Codes and Standards Council of the Concrete and Masonry Industries, 1994.

Table IV.15 – U-factors for Spandrel Panels and Glass Curtain Walls

			Rated R-value of Insulation							
			None	R-4	R-7	R-10	R-15	R-20	R-25	R-30
Frame Type	**Spandrel Panel**		**A**	**B**	**C**	**D**	**E**	**F**	**G**	**H**
Aluminum without Thermal Break	Single glass pane, stone, or metal panel	**1**	0.558	0.331	0.287	0.265	0.244	0.233	0.226	0.221
	Double glass with no low-e coatings	**2**	0.442	0.310	0.277	0.259	0.241	0.231	0.224	0.220
	Triple or low-e glass	**3**	0.377	0.294	0.268	0.253	0.238	0.229	0.223	0.219
Aluminum With Thermal Break	Single glass pane, stone, or metal panel	**4**	1.012	0.935	0.920	0.912	0.905	0.902	0.899	0.897
	Double glass with no low-e coatings	**5**	0.973	0.928	0.917	0.910	0.904	0.901	0.899	0.897
	Triple or low-e glass	**6**	0.951	0.922	0.914	0.909	0.903	0.900	0.898	0.897
Structural Glazing	Single glass pane, stone, or metal panel	**7**	0.514	0.271	0.224	0.200	0.178	0.166	0.158	0.153
	Double glass with no low-e coatings	**8**	0.390	0.249	0.213	0.194	0.175	0.164	0.157	0.152
	Triple or low-e glass	**9**	0.321	0.231	0.204	0.188	0.172	0.162	0.156	0.151
No framing or Insulation is Continuous	Single glass pane, stone, or metal panel	**10**	0.558	0.173	0.114	0.085	0.060	0.046	0.037	0.031
	Double glass with no low-e coatings	**11**	0.442	0.160	0.108	0.082	0.058	0.045	0.037	0.031
	Triple or low-e glass	**12**	0.377	0.150	0.104	0.079	0.057	0.044	0.036	0.031

This table has U-factors for the spandrel section of glass and other curtain wall systems. Design factors that affect performance are the type of framing, the type of spandrel panel and the R-value of insulation.

Four framing conditions are considered in the table. The first is the common case where standard aluminum mullions are used. Standard mullions provide a thermal bridge through the insulation, reducing its effectiveness. The second case is for metal framing members that have a thermal break. A thermal break frame uses a urethane or other non-metallic element to separate the metal exposed to outside conditions from the metal that is exposed to interior conditions. The third case is for structural glazing or systems where there is no exposed mullion on the interior. The fourth case is for the condition where there is no framing or the insulation is continuous and uninterrupted by framing. The continuous insulation section of the table may be used for any situation where the insulation is continuous, including framed curtain walls, metal spandrel panels or other situations.

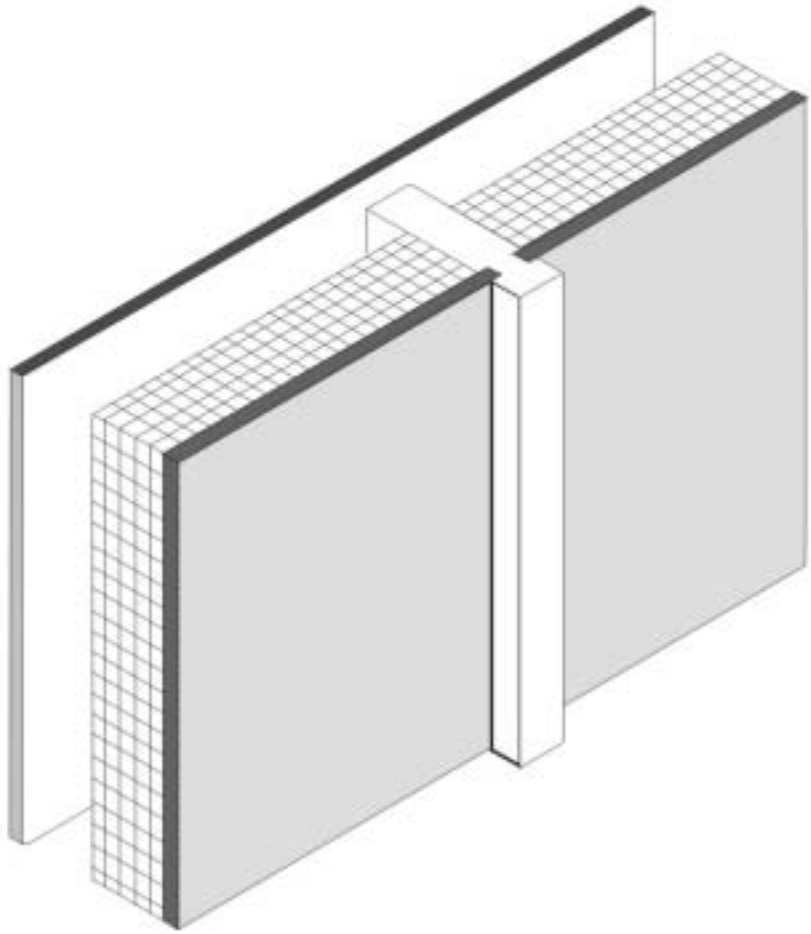

Figure IV.15 – Spandrel Panel

There are three spandrel panel cases considered in the table. The first is for a panel that provides little or no insulating value. This includes single pane glass, stone veneer, metal panels, or pre-case concrete less than 2 in. thick. The second case is for insulating glass. Sometimes insulating glass is used so that the spandrel panel looks similar to the vision glass. The third case is for triple glass or double glass that has a low-e coating.

Insulation levels are shown in the columns of the table. When the table is used manually, the R-value of insulation shall be equal to or greater than the R-value published in the columns. No interpolation is permitted when data from the table is selected manually. CEC approved ACMs, including those used for prescriptive compliance, may accurately account for any amount of continuous insulation or for unusual construction assemblies using Equation IV-1 and Equation IV-2. If the curtain wall has an insulated metal-framed wall on the inside, then values from this table may be combined with values from Table IV.11 or Table IV.19 using the procedures of Equation IV-2 or Equation IV-3.

Assumptions. U-factors are derived from the ASHRAE 2001 Fundamentals, Chapter 30, Table 4. The construction assembly is assumed to consist of an exterior air film of R-0.17, an interior air film of R-0.68, the spandrel panel and framing combination as described in the table, an air gap with R-1.39 (3/4 in gap, 50 ºF mean temperature and 30 ºF temperature difference), and 5/8 in. gypsum board which provides the interior finish. The gypsum board is assumed to span between the window sill and an channel at the floor.

Table IV.16 – U-factors for Metal Building[1] Walls

Insulation System	Rated R-Value of Insulation		Continuous Rigid Insulation							
			None	R-2	R-4	R-6	R-7	R-8	R-10	R-14
			A	B	C	D	E	F	G	H
Single Layer of Batt Insulation[2]	None	1	1.18	0.351	0.206	0.146	0.127	0.113	0.092	0.067
	R-10	2	0.134	0.106	0.087	0.074	0.069	0.065	0.057	0.047
	R-11	3	0.123	0.099	0.082	0.071	0.066	0.062	0.055	0.045
	R-13	4	0.113	0.092	0.078	0.067	0.063	0.059	0.053	0.044
Double Layer of Batt Insulation[3]	R-13 + R-10	5	0.061	0.054	0.049	0.045	0.043	0.041	0.038	0.035
	R-13 + R-13	6	0.057	0.051	0.046	0.042	0.041	0.039	0.036	0.034

The U-factors in this table are intended for use with metal building walls. This type of construction is typical for manufacturing and warehouse facilities, but is used for other building types as well. The typical method of insulating this type of building is to stretch vinyl backed fiberglass insulation over the metal girts before the metal siding is attached with metal screws. With this method, the insulation is compressed at each girt, reducing its effectiveness. The first part of the table contains values for this insulation technique. The second section of the table has data for systems that have two layers of insulation.

For the majority of cases, values will be selected from column A of this table. Builders or designers may increase thermal performance by adding a rigid continuous insulation layer between the metal siding and the structural supports. When this table is used manually, the R-value of continuous insulation shall be equal to or greater than the R-value published in the continuous insulation columns. No interpolation is permitted when data from the table is used manually. CEC approved ACMs, however, may determine the U-factor for any amount of continuous insulation using Equation IV-1.

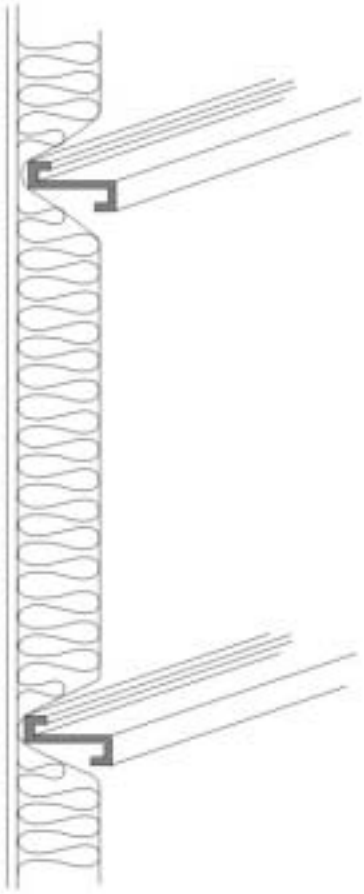

Figure IV.16 – Metal Building Wall

Assumptions. Data in Column A of this table is taken from the ASHRAE/IESNA Standard 90.1-2001, Appendix A. The data in columns beyond A are calculated using Equation IV-1.

Table IV.17 – Thermal Properties of Log Home Walls

		U-factor	Heat Capacity (HC)
Log Diameter		A	
6”	**1**	0.133	4.04
8”	**2**	0.102	6.06
10”	**3**	0.083	6.73
12”	**4**	0.070	8.08
14”	**5**	0.060	9.42
16”	**6**	0.053	10.77

This table has U-factors and heat capacity data for log homes Data is provided for logs in six thicknesses ranging from 6 in. to 16 in. If other thermal properties are needed such as density, weight, conductivity, etc., use the procedures in Modeling Constructions in the Nonresidential ACM contained at the end of this ACM Joint Appendix IV. CEC approved ACMs may adjust the data for interior furring using data from Table IV.14 and the procedure from Equation IV-2.

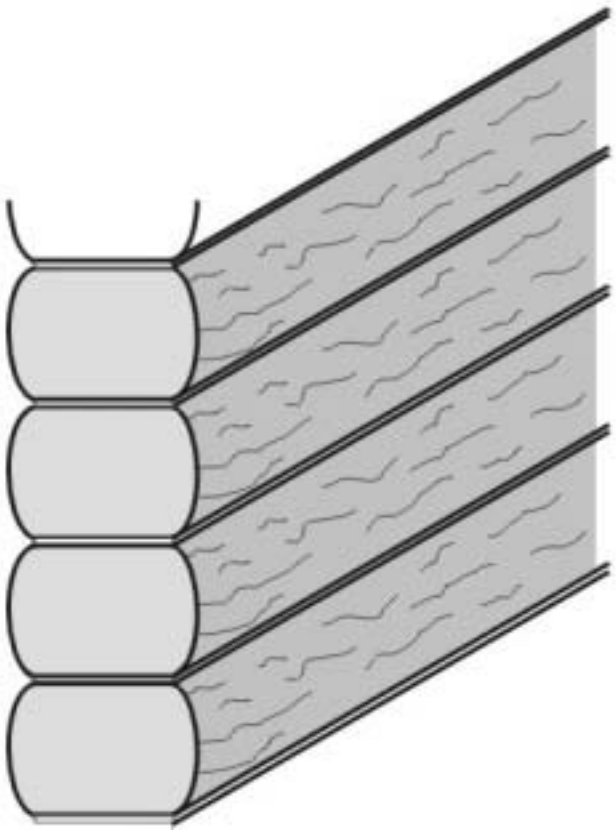

Figure IV.17 – Log Home Walls

Assumptions. Calculations are based on ASHRAE series method of calculation, ASHRAE Fundamentals Handbook. Values assume a log R-value of R-1.25/inch, an average wall thickness of 90% of the log diameter, an interior air film of R-0.62 and an exterior air film of R-0.17. Values do not account for presence of windows or doors. Construction assumes no additional siding or insulation. Heat Capacity is based on a hardwood density of 26.6 lb/ft^3 and a specific heat of 0.39 Btu/lb-ºF. An exterior air film of 0.17 and an interior film of 0.68 are assumed.

Table IV.18 – Thermal and Mass Properties of Straw Bale Walls

		A
R-value	1	30
U-factor		0.033
Heat Capacity [Btu/ft^2*°F]		2.24

This table has data that may be used for straw bail construction. This is an alternative construction technique used in some rural areas. The technique is not commonly used for production homes.

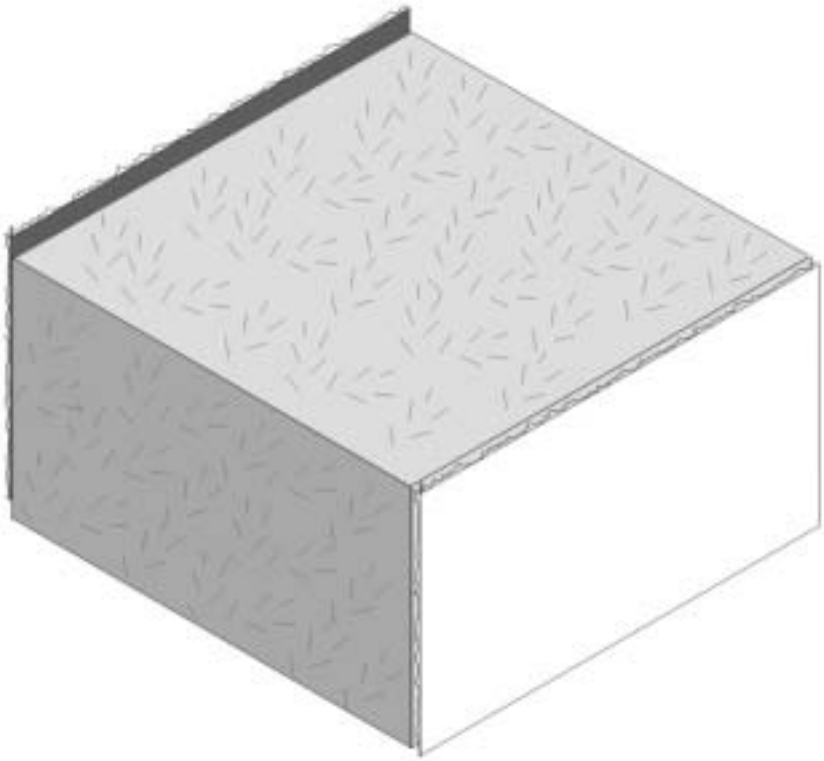

Figure IV.18 – Straw Bale Wall

Assumptions. The construction consists of an exterior film of 0.17, stucco and lath of R-0.18, the straw bale, interior plaster of R-0.47, and an interior air film of 0.68. Straw bale must have a minimum cross section of 22 in. x 16 in., and shall have a thermal resistance of R-30, whether stacked so the walls are 23 in. wide or 16 in. wide. Due to the higher resistance to heat flow across the grain of the straws, a bale laid on edge with a nominal 16 in. horizontal thickness has the same R-value (R-30) as a bale laid flat. Framing is assumed to not penetrate more than 25% of the way through the straw bale.

Table IV.19 – Effective R-values for Interior or Exterior Insulation Layers

			R-value of Insulation Installed in Furring Space																					
			0	1	2	3	4	5	6	7	8	9	10	11	12	13	14	15	16	17	18	19	20	21
Thick-ness	Frame Type		A	B	C	D	E	F	G	H	I	J	K	L	M	N	O	P	Q	R	S	T	U	V
Any	None	1	0.5	1.5	2.5	3.5	4.5	5.5	6.5	7.5	8.5	9.5	10.5	11.5	12.5	13.5	14.5	15.5	16.5	17.5	18.5	19.5	20.5	21.5
0.5"	Wood	2	1.3	1.3	1.9	2.4	2.7	n.a.	n.a.	n.a.	n.a.	n.a.	n.a.	n.a.	n.a.	n.a.	n.a.	n.a.	n.a.	n.a.	n.a.	n.a.	n.a.	n.a.
	Metal	3	0.9	0.9	1.1	1.1	1.2	n.a.	n.a.	n.a.	n.a.	n.a.	n.a.	n.a.	n.a.	n.a.	n.a.	n.a.	n.a.	n.a.	n.a.	n.a.	n.a.	n.a.
0.75"	Wood	4	1.4	1.4	2.1	2.7	3.1	3.5	3.8	n.a.	n.a.	n.a.	n.a.	n.a.	n.a.	n.a.	n.a.	n.a.	n.a.	n.a.	n.a.	n.a.	n.a.	n.a.
	Metal	5	1.0	1.0	1.3	1.4	1.5	1.5	1.6	n.a.	n.a.	n.a.	n.a.	n.a.	n.a.	n.a.	n.a.	n.a.	n.a.	n.a.	n.a.	n.a.	n.a.	n.a.
1.0"	Wood	6	1.3	1.5	2.2	2.9	3.4	3.9	4.3	4.6	4.9	n.a.	n.a.	n.a.	n.a.	n.a.	n.a.	n.a.	n.a.	n.a.	n.a.	n.a.	n.a.	n.a.
	Metal	7	1.0	1.1	1.4	1.6	1.7	1.8	1.8	1.9	1.9	n.a.	n.a.	n.a.	n.a.	n.a.	n.a.	n.a.	n.a.	n.a.	n.a.	n.a.	n.a.	n.a.
1.5"	Wood	8	1.3	1.5	2.4	3.1	3.8	4.4	4.9	5.4	5.8	6.2	6.5	6.8	7.1	n.a.	n.a.	n.a.	n.a.	n.a.	n.a.	n.a.	n.a.	n.a.
	Metal	9	1.1	1.2	1.6	1.9	2.1	2.2	2.3	2.4	2.5	2.5	2.6	2.6	2.7	n.a.	n.a.	n.a.	n.a.	n.a.	n.a.	n.a.	n.a.	n.a.
2"	Wood	10	1.4	1.5	2.5	3.3	4.0	4.7	5.3	5.9	6.4	6.9	7.3	7.7	8.1	8.4	8.7	9.0	9.3	n.a.	n.a.	n.a.	n.a.	n.a.
	Metal	11	1.1	1.2	1.7	2.1	2.3	2.5	2.7	2.8	2.9	3.0	3.1	3.2	3.2	3.3	3.3	3.4	3.4	n.a.	n.a.	n.a.	n.a.	n.a.
2.5"	Wood	12	1.4	1.5	2.5	3.4	4.2	4.9	5.6	6.3	6.8	7.4	7.9	8.4	8.8	9.2	9.6	10.0	10.3	10.6	10.9	11.2	11.5	n.a.
	Metal	13	1.2	1.3	1.8	2.3	2.6	2.8	3.0	3.2	3.3	3.5	3.6	3.6	3.7	3.8	3.9	3.9	4.0	4.0	4.1	4.1	4.1	n.a.
3"	Wood	14	1.4	1.5	2.5	3.5	4.3	5.1	5.8	6.5	7.2	7.8	8.3	8.9	9.4	9.9	10.3	10.7	11.1	11.5	11.9	12.2	12.5	12.9
	Metal	15	1.2	1.3	1.9	2.4	2.8	3.1	3.3	3.5	3.7	3.8	4.0	4.1	4.2	4.3	4.4	4.4	4.5	4.6	4.6	4.7	4.7	4.8
3.5"	Wood	16	1.4	1.5	2.6	3.5	4.4	5.2	6.0	6.7	7.4	8.1	8.7	9.3	9.8	10.4	10.9	11.3	11.8	12.2	12.6	13.0	13.4	13.8
	Metal	17	1.2	1.3	2.0	2.5	2.9	3.2	3.5	3.8	4.0	4.2	4.3	4.5	4.6	4.7	4.8	4.9	5.0	5.1	5.1	5.2	5.2	5.3
4"	Wood	18	1.4	1.6	2.6	3.6	4.5	5.3	6.1	6.9	7.6	8.3	9.0	9.6	10.2	10.8	11.3	11.9	12.4	12.8	13.3	13.7	14.2	14.6
	Metal	19	1.2	1.3	2.0	2.6	3.0	3.4	3.7	4.0	4.2	4.5	4.6	4.8	5.0	5.1	5.2	5.3	5.4	5.5	5.6	5.7	5.8	5.8
4.5"	Wood	20	1.4	1.6	2.6	3.6	4.5	5.4	6.2	7.1	7.8	8.5	9.2	9.9	10.5	11.2	11.7	12.3	12.8	13.3	13.8	14.3	14.8	15.2
	Metal	21	1.2	1.3	2.1	2.6	3.1	3.5	3.9	4.2	4.5	4.7	4.9	5.1	5.3	5.4	5.6	5.7	5.8	5.9	6.0	6.1	6.2	6.3
5"	Wood	22	1.4	1.6	2.6	3.6	4.6	5.5	6.3	7.2	8	8.7	9.4	10.1	10.8	11.5	12.1	12.7	13.2	13.8	14.3	14.8	15.3	15.8
	Metal	23	1.2	1.4	2.1	2.7	3.2	3.7	4.1	4.4	4.7	5.0	5.2	5.4	5.6	5.8	5.9	6.1	6.2	6.3	6.5	6.6	6.7	6.8
5.5"	Wood	24	1.4	1.6	2.6	3.6	4.6	5.5	6.4	7.3	8.1	8.9	9.6	10.3	11.0	11.7	12.4	13.0	13.6	14.2	14.7	15.3	15.8	16.3
	Metal	25	1.3	1.4	2.1	2.8	3.3	3.8	4.2	4.6	4.9	5.2	5.4	5.7	5.9	6.1	6.3	6.4	6.6	6.7	6.8	7.0	7.1	7.2
EIFS		26	0.0	1.0	2.0	3.0	4.0	5.0	6.0	7.0	8.0	9.0	10.0	11.0	12.0	13.0	14.0	15.0	16.0	17.0	18.0	19.0	20.0	21.0

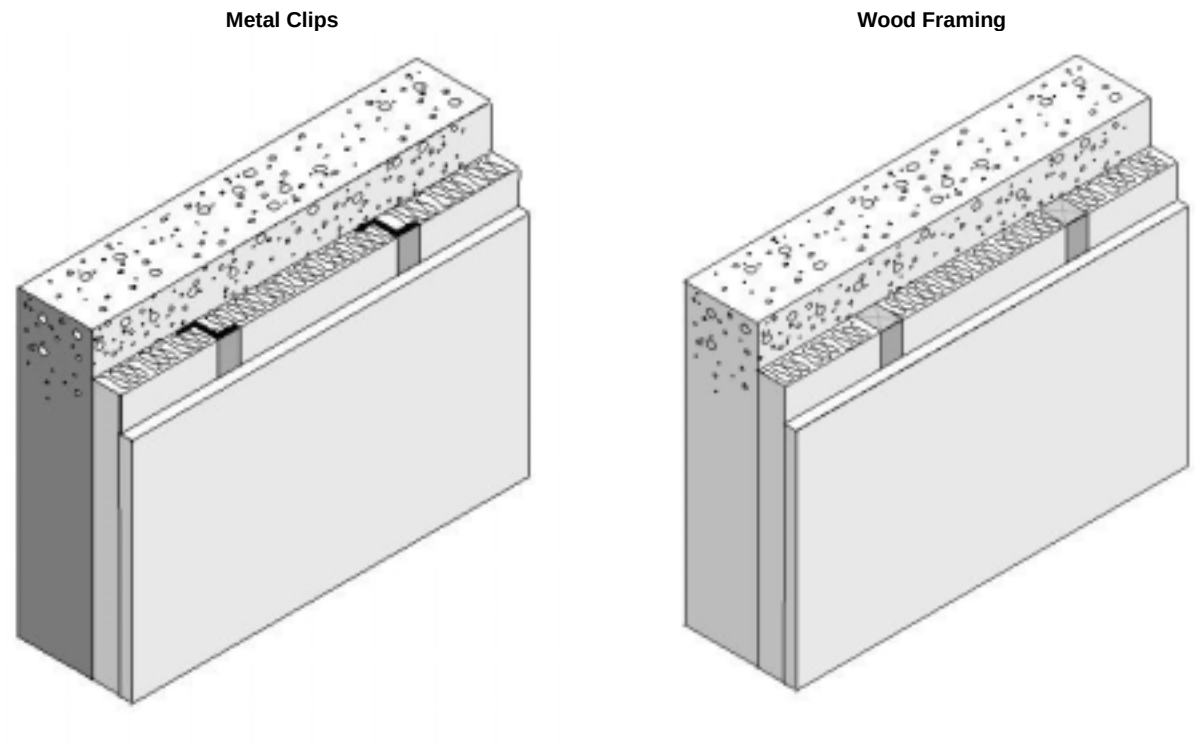

Figure IV.19 – Interior or Exterior Insulation Layers

This table is used in combination with other tables and Equation IV-1 and Equation IV-2 to account for interior furring and continuous insulation added to other constructions. .

Assumptions. Data is taken from Concrete Masonry Association of California and Nevada, *Energy Calculations and Data*, Berkeley Solar Group, 1986. All furring thickness values given are actual dimensions. All values include .5" gypsum board on the inner surface, interior surface resistances not included. The metal furring is 24" OC, 24 gauge, Z-type Metal Furring. The wood furring is 24" OC, Douglas-Fir Larch Wood Furring, density = 34.9 lb/ft^3. Insulation assumed to fill the furring space.

IV.4 Floors and Slabs

Table IV.20 – Standard U-factors for Wood-Framed Floors with a Crawl Space

Framing Spacing	Nominal Framing Size	R-Value Cavity Insul.		Rated R-value of Continuous Insulation							
				R-0	R-2	R-4	R-6	R-7	R-8	R-10	R-14
				A	B	C	D	E	F	G	H
16 in. OC	Any	None	1	0.099	0.082	0.071	0.062	0.058	0.055	0.049	0.041
	2 x 6	R-11	2	0.050	0.045	0.042	0.038	0.037	0.036	0.033	0.029
		R-13	3	0.046	0.042	0.039	0.036	0.035	0.034	0.031	0.028
	2 x 8	R-19	4	0.037	0.035	0.032	0.030	0.029	0.028	0.027	0.024
		R-22	5	0.034	0.032	0.030	0.028	0.027	0.027	0.025	0.023
	2 x 10	R-25	6	0.031	0.029	0.028	0.026	0.025	0.025	0.024	0.021
		R-30	7	0.028	0.026	0.025	0.024	0.023	0.023	0.022	0.020
	2 x 12	R-38	8	0.024	0.022	0.021	0.020	0.020	0.020	0.019	0.017
24 in. OC	Any	None	9	0.092	0.077	0.067	0.059	0.056	0.053	0.048	0.040
	2 x 6	R-11	10	0.049	0.045	0.041	0.038	0.037	0.035	0.033	0.029
		R-13	11	0.045	0.042	0.038	0.036	0.034	0.033	0.031	0.028
	2 x 8	R-19	12	0.036	0.034	0.032	0.030	0.029	0.028	0.027	0.024
		R-22	13	0.033	0.031	0.029	0.028	0.027	0.026	0.025	0.023
	2 x 10	R-25	14	0.030	0.029	0.027	0.026	0.025	0.024	0.023	0.021
		R-30	15	0.027	0.026	0.024	0.023	0.023	0.022	0.021	0.019
	2 x 12	R-38	16	0.023	0.022	0.021	0.020	0.019	0.019	0.018	0.017

Notes:

In order to use the U-factors listed in this section, exterior raised-floor insulation shall be installed between floor joists with a means of support that prevents the insulation from falling, sagging or deteriorating. Two approaches that accomplish this are:

- Nailing insulation hangers 18 inches apart prior to rolling out the insulation. Hangers are heavy wires up to 48 inches long with pointed ends, which provide positive wood penetration.
- Attaching wire mesh to form a basket between joists to support the insulation. Mesh is nailed or stapled to the underside of the joists.

This table contains U-factors for wood framed floors built over a ventilated crawlspace. This construction is common for low-rise residential buildings and for Type IV nonresidential buildings.

If continuous insulation is not used, then choices are made from Column A. In this case, the insulation is installed only between the framing members. Continuous insulation is not common for wood floors over a crawlspace, but if credit is taken, the insulation may be installed either above or below the framing members. The continuous insulation is typically a rigid polystyrene or polyisocyanurate foam insulation.

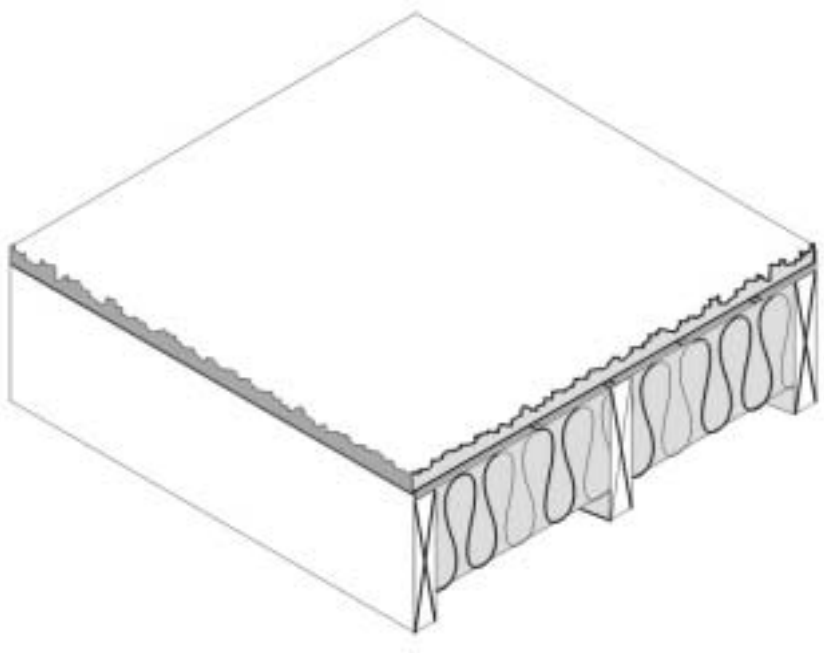

Figure IV.20 – Wood Framed Floor with a Crawl Space

When this table is used manually, the R-value of continuous insulation shall be equal to or greater than the R-value published in the continuous insulation columns. Continuous insulation of at least R-2 must exist in order to use columns B and beyond. No interpolation is permitted when data from the table is used manually. CEC approved software, however, may determine the U-factor for any amount of continuous insulation or for unusual construction assemblies using Equation IV-1 and Equation IV-2.

If the crawlspace is not ventilated and is modeled as a controlled ventilation crawlspace (CVC), then values from this table shall not be used. Values from Table IV.21 shall be used instead and the crawlspace shall be modeled as a separate and unconditioned zone.

Assumptions. Calculations use the ASHRAE parallel heat flow method documented in the ASHRAE 2001 Fundamentals. These calculations assume an exterior air film of R-0.17, a vented crawlspace for an effective R-6, a continuous insulation layer (if any), the insulation / framing layer, 5/8” of plywood of R-0.78 (PW04), carpet and pad of R-2.08 (CP01), and an interior air film (heat flow down) of R-0.92. The crawlspace is assumed to be equivalent to R-6 of additional insulation.

Table IV.21 – Standard U-factors for Wood Framed Floors without a Crawl Space

Spacing	Nominal Framing Size	R-Value of Cavity Insul.		Rated R-value of Continuous Insulation							
				R-0	R-2	R-4	R-6	R-7	R-8	R-10	R-14
				A	B	C	D	E	F	G	H
16 in. OC	Any	None	**1**	0.238	0.160	0.121	0.097	0.088	0.081	0.070	0.054
	2 x 6	R-11	**2**	0.071	0.062	0.055	0.049	0.047	0.045	0.041	0.035
	(5.25 in)	R-13	**3**	0.064	0.056	0.050	0.046	0.044	0.042	0.039	0.033
	2 x 8	R-19	**4**	0.048	0.044	0.040	0.037	0.036	0.034	0.032	0.028
	(7.25 in.)	R-22	**5**	0.044	0.040	0.037	0.034	0.033	0.032	0.030	0.027
	2 x 10	R-25	**6**	0.039	0.036	0.033	0.031	0.030	0.029	0.027	0.025
	(9.25 in.)	R-30	**7**	0.034	0.032	0.030	0.028	0.027	0.026	0.025	0.022
	2 x 12 (11.25 in.)	R-38	**8**	0.066	0.058	0.052	0.047	0.045	0.043	0.040	0.034
24 in. OC	Any	None	**9**	0.199	0.142	0.110	0.090	0.083	0.076	0.066	0.052
	2 x 6	R-11	**10**	0.070	0.061	0.054	0.049	0.047	0.045	0.041	0.035
	(5.25 in.)	R-13	**11**	0.062	0.055	0.050	0.045	0.043	0.041	0.038	0.033
	2 x 8	R-19	**12**	0.047	0.043	0.039	0.036	0.035	0.034	0.032	0.028
	(7.25 in.)	R-22	**13**	0.042	0.039	0.036	0.033	0.032	0.031	0.029	0.026
	2 x 10	R-25	**14**	0.037	0.035	0.032	0.030	0.029	0.028	0.027	0.024
	(9.25 in.)	R-30	**15**	0.033	0.031	0.029	0.027	0.026	0.025	0.024	0.022
	2 x 12 (11.25 in.)	R-38	**16**	0.027	0.025	0.024	0.023	0.022	0.022	0.021	0.019

This table contains U-factors for wood framed floors that are exposed to ambient (outdoor) conditions. This construction is common for low-rise residential buildings and for Type IV nonresidential buildings.

If continuous insulation is not used, then choices are made from Column A. In this case, the insulation is installed only between the framing members. If credit is taken for continuous insulation, the insulation may be installed either above or below the framing members.

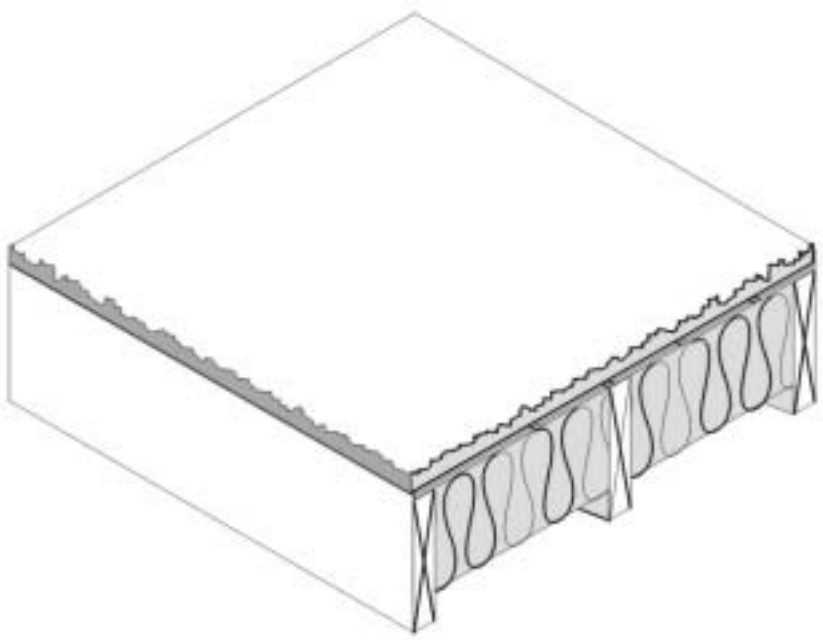

Figure IV.21 – Wood Framed Floor without a Crawl Space

When this table is used manually, the R-value of continuous insulation shall be equal to or greater than the R-value published in the continuous insulation columns. Continuous insulation of at least R-2 must exist in order to use data from columns B and beyond. No interpolation is permitted when data from the table is used manually. CEC approved software, however, may determine the U-factor for any amount of continuous insulation or for unusual construction assemblies using Equation IV-1 and Equation IV-2.

Assumptions. Calculations use the ASHRAE parallel heat flow method documented in the ASHRAE 2001 Fundamentals. These calculations assume an exterior air film of R-0.17, a continuous insulation layer (if any), the cavity insulation / framing layer, 5/8" of plywood of R-0.78 (PW04), carpet and pad of R-2.08 (CP01), and an interior air film (heat flow down) of R-0.92.

Table IV.22 – Standard U-factors for Wood Foam Panel (SIP) Floors

				Rated R-value of Continuous Insulation [2]							
				None	R-2	R-4	R-6	R-7	R-8	R-10	R-14
Crawlspace	**Insulation R-value**	**Panel Thickness**		**A**	**B**	**C**	**D**	**E**	**F**	**G**	**H**
No	R-14	4 ½"	**1**	0.058	0.052	0.047	0.043	0.041	0.040	0.037	0.032
	R-22	6 ½"	**2**	0.042	0.039	0.036	0.033	0.032	0.031	0.029	0.026
	R-28	8 ¼"	**3**	0.033	0.031	0.030	0.028	0.027	0.026	0.025	0.023
	R-36	10 ¼"	**4**	0.027	0.026	0.025	0.024	0.023	0.022	0.022	0.020
Yes	R-14	4 ½"	**5**	0.043	0.039	0.036	0.034	0.033	0.032	0.030	0.027
	R-22	6 ½"	**6**	0.033	0.031	0.029	0.028	0.027	0.026	0.025	0.023
	R-28	8 ¼"	**7**	0.028	0.026	0.025	0.024	0.023	0.023	0.022	0.020
	R-36	10 ¼"	**8**	0.023	0.022	0.021	0.020	0.020	0.020	0.019	0.018

Notes:

[2] For credit, continuous insulation shall be at least R-2 and may be installed on either the inside or the exterior of the wall.

This table gives U-factors for structurally insulated panels used in floor construction. This is a construction system that consists of rigid foam insulation sandwiched between two layers of plywood or oriented strand board (OSB). For floors 2x wood spacers are assumed to separate the OSB panels and carry the floor load.

If continuous insulation is not used, then choices are made from Column A. When continuous insulation is also used, this is typically installed on the exterior side of the floor, but can also be used on the inside. The continuous insulation is typically a rigid polystyrene or polyisocyanurate foam insulation.

When this table is used manually, the R-value of continuous insulation shall be equal to or greater than the R-value published in the continuous insulation columns. Continuous insulation of at least R-2 must exist in order to use this table. CEC approved software, however, may determine the U-factor for any amount of continuous insulation or for unusual construction assemblies using Equation IV-1 and Equation IV-2.

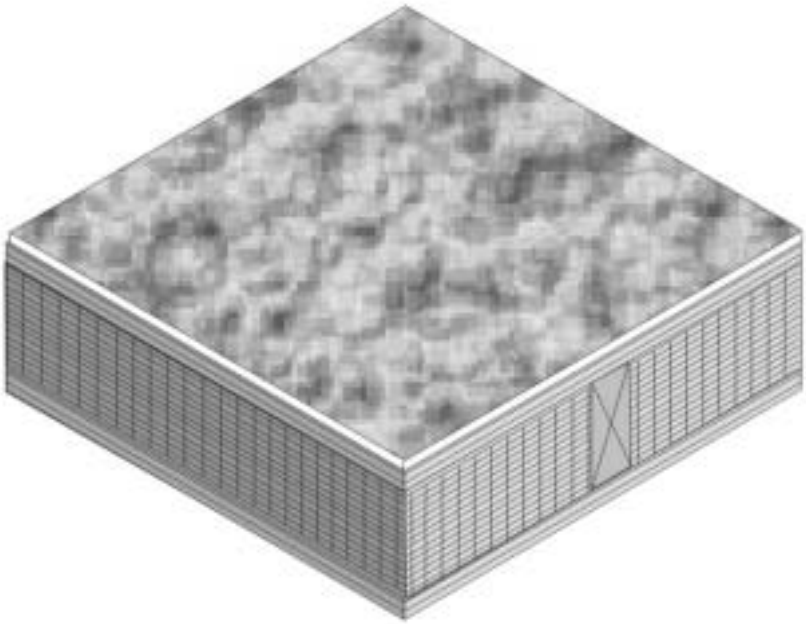

Figure IV.22 – Wood Foam Panel (SIP) Floor

Assumptions: These data are calculated using the parallel path method documented in the 2001 ASHRAE Fundamentals. These calculations assume an exterior air film of R-0.17, a vented crawlspace with an effective R-6, 7/16" of OSB of R-0.69, the insulation / framing layer, 7/16" of OSB, carpet and pad of R-2.08 (CP01) and an interior air film (heat flow down) of R-0.92. Calculations assume a 2x framing spline every 4' o.c. Framing section assumes an exterior air film of R-0.17, a vented crawlspace of R-6, 7/16" of OSB at R-0.69, 2x framing, 7/16" of OSB, carpet and pad of R-2.08 (CP01) and an interior air film of R-0.92.

Table IV.23 – Standard U-factors for Metal-Framed Floors with a Crawl Space

Framing Spacing	Nominal Framing Size	Cavity Insulation R-Value:		Rated R-value of Continuous Insulation							
				R-0	R-2	R-4	R-6	R-7	R-8	R-10	R-14
				A	B	C	D	E	ºF	G	H
16 in. OC	Any	None	1	0.094	0.079	0.068	0.060	0.057	0.054	0.048	0.041
	2 x 6	R-11	2	0.065	0.058	0.052	0.047	0.045	0.043	0.039	0.034
		R-13	3	0.063	0.056	0.050	0.046	0.044	0.042	0.039	0.033
		R-19	4	0.058	0.052	0.047	0.043	0.041	0.040	0.037	0.032
	2 x 8	R-19	5	0.057	0.051	0.046	0.042	0.041	0.039	0.036	0.032
		R-22	6	0.055	0.050	0.045	0.041	0.040	0.038	0.035	0.031
	2 x 10	R-30	7	0.051	0.046	0.042	0.039	0.038	0.036	0.034	0.030
	2 x 12	R-38	8	0.047	0.043	0.040	0.037	0.035	0.034	0.032	0.028
24 in. OC	Any	None	9	0.094	0.079	0.068	0.060	0.057	0.054	0.048	0.041
	2 x 6	R-11	10	0.060	0.054	0.048	0.044	0.042	0.041	0.038	0.033
		R-13	11	0.057	0.051	0.046	0.042	0.041	0.039	0.036	0.032
		R-19	12	0.052	0.047	0.043	0.040	0.038	0.037	0.034	0.030
	2 x 8	R-19	13	0.051	0.046	0.042	0.039	0.038	0.036	0.034	0.030
		R-22	14	0.049	0.045	0.041	0.038	0.036	0.035	0.033	0.029
	2 x 10	R-30	15	0.044	0.040	0.037	0.035	0.034	0.033	0.031	0.027
	2 x 12	R-38	16	0.040	0.037	0.034	0.032	0.031	0.030	0.029	0.026

Notes:

In order to use the U-factors listed in this table, exterior raised-floor insulation shall be installed between floor joists with a means of support that prevents the insulation from falling, sagging or deteriorating. Two approaches that accomplish this are:

- Attaching insulation hangers 18 inches apart prior to rolling out the insulation. Hangers are heavy wires up to 48 inches long with pointed ends, which provide positive wood penetration.
- Attaching wire mesh to form a basket between joists to support the insulation. Mesh is nailed or stapled to the underside of the joists.

This table contains U-factors for metal-framed floors built over a crawlspace. The constructions represented are similar to those in Table IV.20, except that wood framing is replace with metal framing. Cavity insulation is installed between the framing members.

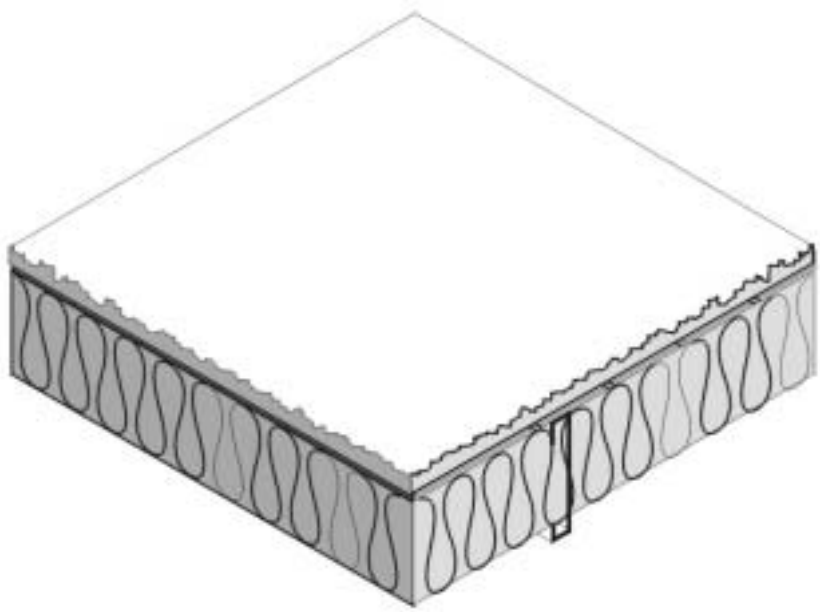

Figure IV.23 – Metal Framed Floors with a Crawl Space

For the majority of cases, values will be selected from column A of this table. Column A applies for the common situation where batt insulation is supported between framing members. Builders or designers may increase thermal performance by adding a continuous insulation layer either above or below the framing members.

When this table is used manually, the R-value of continuous insulation shall be equal to or greater than the R-value published in the continuous insulation columns. No interpolation is permitted when data from the table is used manually. CEC approved software, however, may determine the U-factor for any amount of continuous insulation and for unusual construction layers using Equation IV-1 and Equation IV-2.

Assumptions. Calculations are based on the ASHRAE Zone Method Calculation, 2001 ASHRAE Fundamentals Handbook These calculations assume an exterior air film of R-0.17, a vented crawlspace for an effective R-6, a continuous insulation layer (if any), the insulation / framing layer, 5/8” of plywood of R-0.78 (PW04), carpet and pad of R-2.08 (CP01), and an interior air film (heat flow down) of R-0.92. The effect of the crawlspace is approximated by an additional R-6 of insulation.

Table IV.24 – Standard U-factors for Metal-Framed Floors without a Crawl Space

				Rated R-value of Continuous Insulation							
				R-0	R-2	R-4	R-6	R-7	R-8	R-10	R-14
Spacing	**Nominal Framing Size**	**Cavity Insulation R-Value**		**A**	**B**	**C**	**D**	**E**	**F**	**G**	**H**
16 in. OC	Any	None	**1**	0.253	0.168	0.126	0.100	0.091	0.084	0.072	0.056
	2 x 6	R-11	**2**	0.106	0.087	0.074	0.065	0.061	0.057	0.051	0.043
		R-13	**3**	0.100	0.083	0.071	0.063	0.059	0.056	0.050	0.042
		R-19	**4**	0.090	0.076	0.066	0.058	0.055	0.052	0.047	0.040
	2 x 8	R-19	**5**	0.086	0.073	0.064	0.057	0.054	0.051	0.046	0.039
		R-22	**6**	0.083	0.071	0.062	0.055	0.052	0.050	0.045	0.038
	2 x 10	R-30	**7**	0.073	0.064	0.057	0.051	0.048	0.046	0.042	0.036
	2 x 12	R-38	**8**	0.066	0.058	0.052	0.047	0.045	0.043	0.040	0.034
24 in. OC	Any	None	**9**	0.253	0.168	0.126	0.100	0.091	0.084	0.072	0.056
	2 x 6	R-11	**10**	0.094	0.079	0.068	0.060	0.057	0.054	0.048	0.041
		R-13	**11**	0.087	0.074	0.065	0.057	0.054	0.051	0.047	0.039
		R-19	**12**	0.076	0.066	0.058	0.052	0.050	0.047	0.043	0.037
	2 x 8	R-19	**13**	0.073	0.064	0.057	0.051	0.048	0.046	0.042	0.036
		R-22	**14**	0.069	0.061	0.054	0.049	0.047	0.044	0.041	0.035
	2 x 10	R-30	**15**	0.060	0.054	0.048	0.044	0.042	0.041	0.038	0.033
	2 x 12	R-38	**16**	0.053	0.048	0.044	0.040	0.039	0.037	0.035	0.030

Notes:

In order to use the U-factors listed in this section, exterior raised-floor insulation shall be installed between floor joists with a means of support that prevents the insulation from falling, sagging or deteriorating. Two approaches that accomplish this are:

- Attaching insulation hangers 18 inches apart prior to rolling out the insulation. Hangers are heavy wires up to 48 inches long with pointed ends, which provide positive wood penetration.
- Attaching wire mesh to form a basket between joists to support the insulation. Mesh is nailed or stapled to the underside of the joists.

This table contains U-factors for metal-framed floors built over outdoor conditions. The constructions represented are similar to those in Modeling Constructions in the Nonresidential ACM except that wood framing is replace with metal framing. For the majority of cases, values will be selected from column A of this table. Column A applies for the common situation where batt insulation is supported between framing members. Builders or designers may increase thermal performance by adding a continuous insulation layer either above or below the framing members.

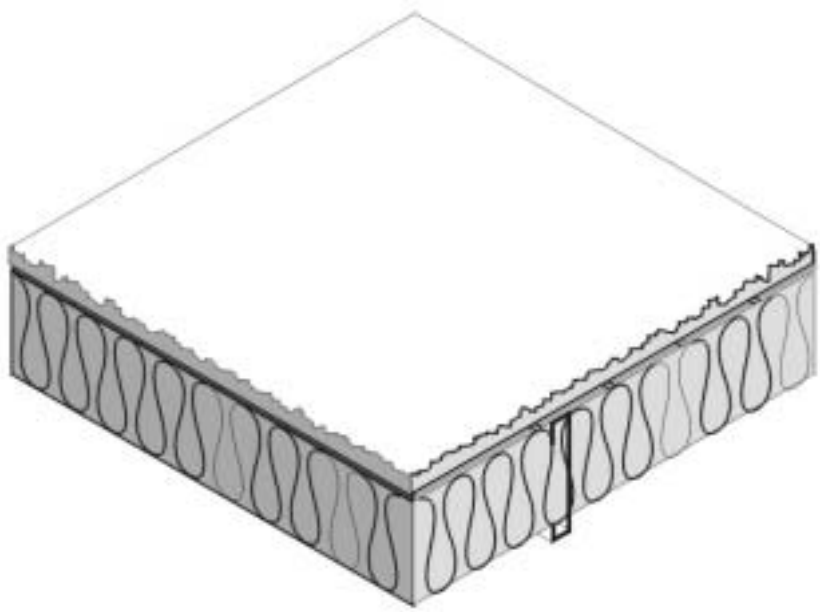

Figure IV.24 – Metal Framed Floors without a Crawl Space

When this table is used manually, the R-value of continuous insulation shall be equal to or greater than the R-value published in the continuous insulation columns. No interpolation is permitted when data from the table is used manually. CEC approved software, however, may determine the U-factor for any amount of continuous insulation and for unusual construction layers using Equation IV-1 and Equation IV-2.

Assumptions. Calculations are based on the ASHRAE Zone Method Calculation, 2001 ASHRAE Fundamentals Handbook These calculations assume an exterior air film of R-0.17, a continuous insulation layer (if any), the insulation / framing layer, 5/8" of plywood of R-0.78 (PW04), carpet and pad of R-2.08 (CP01), and an interior air film (heat flow down) of R-0.92.

Table IV.25 – Standard U-factors for Concrete Raised Floors

R-value of Insulation		Rated R-value of Continuous Insulation		
		Continuous Insulation Underneath	**Continuous Insulation Above Deck[1] with no Sleepers**	Continuous Insulation Above Deck[1] with Sleepers
		A	**B**	**C**
R-0	**1**	0.315	0.253	0.253
R-2	**2**	0.193	0.168	0.165
R-4	**3**	0.139	0.126	0.127
R-6	**4**	0.109	0.101	0.104
R-8	**5**	0.090	0.084	0.089
R-10	**6**	0.076	0.072	0.078
R-12	**7**	0.066	0.063	0.070
R-15	**8**	0.055	0.053	0.061
R-20	**9**	0.043	0.042	0.051
R-25	**10**	0.035	0.035	0.045
R-30	**11**	0.030	0.029	0.040

Notes:

[1] Above deck case includes a 5/8" layer of plywood between the insulation and the carpet and pad.

This table may be used only if the HC of the proposed design floor is greater than or equal to 7.0 Btu/ft²-ºF.

Continuous Insulation Underneath

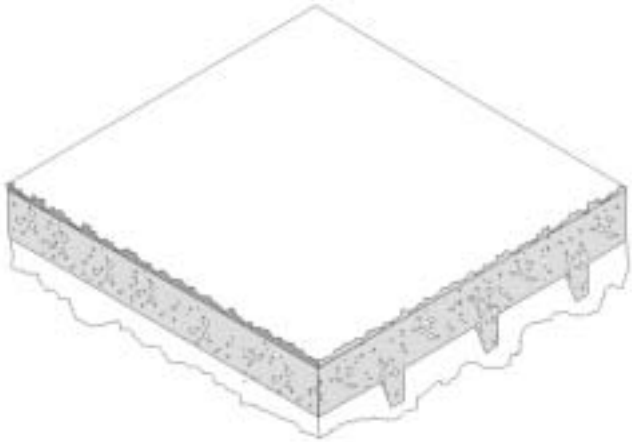

Continuous Insulation Above Deck

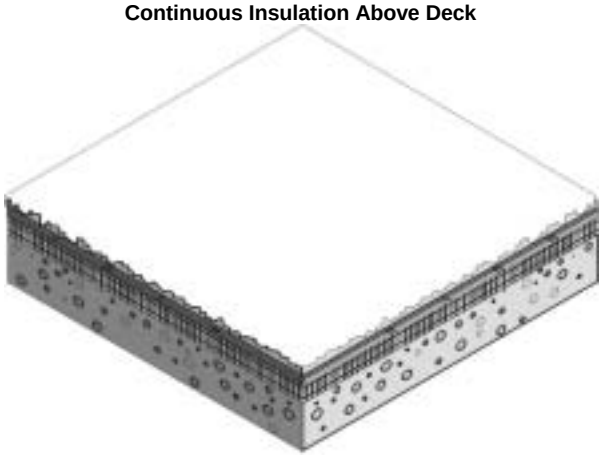

Figure IV.25 – Concrete Raised Floors

Assumptions. These calculations assume an exterior air film of R-0.17, a continuous insulation layer (if any), 4 in. of the lightweight concrete (CC14) over metal deck R-0, a continuous insulation layer (if any), 5/8" of plywood of R-0.78 (PW04) (if continuous insulation above deck), carpet and pad of R-2.08 (CP01), and an interior air film (heat flow down) of R-0.92.

Table IV.26 – F-Factors for Unheated Slab-on-Grade Floors

		Rated R-Value of Insulation												
Insulation Description		R-0	R-5	R-7.5	R-10	R-15	R-20	R-25	R-30	R-35	R-40	R-45	R-50	R-55
		A	**B**	**C**	**D**	**E**	**F**	**G**	**H**	**I**	**J**	**K**	**L**	**M**
None	**1**	0.73												
12 in. horizontal	**2**		0.72	0.71	0.71	0.71								
24 in. horizontal	**3**		0.70	0.70	0.70	0.69								
36 in. horizontal	**4**		0.68	0.67	0.66	0.66								
48 in. horizontal	**5**		0.67	0.65	0.64	0.63								
12 in. vertical	**6**		0.61	0.60	0.58	0.57	0.567	0.565	0.564					
24 in. vertical	**7**		0.58	0.56	0.54	0.52	0.510	0.505	0.502					
36 in. vertical	**8**		0.56	0.53	0.51	0.48	0.472	0.464	0.460					
48 in. vertical	**9**		0.54	0.51	0.48	0.45	0.434	0.424	0.419					
Fully insulated slab	**10**		0.46	0.41	0.36	0.30	0.261	0.233	0.213	0.198	0.186	0.176	0.168	0.161
Note: These values are used for slab edge conditions with and without carpet.														

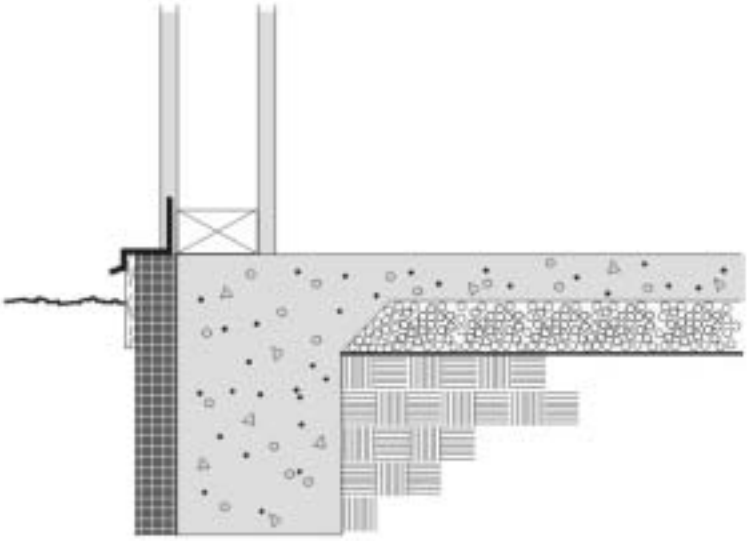

Figure IV.26 – Unheated Slab-on-Grade Floor

Table IV.27 – F-Factors for Heated Slab-on-Grade Floors

		Rated R-Value of Insulation												
		R-0	R-5	R-7.5	R-10	R-15	R-20	R-25	R-30	R-35	R-40	R-45	R-50	R-55
		A	B	C	D	E	F	G	H	I	J	K	L	M
None	**11**	1.35												
12 in. horizontal	**12**		1.31	1.31	1.30	1.30								
24 in. horizontal	**13**		1.28	1.27	1.26	1.25								
36 in. horizontal	**14**		1.24	1.21	1.20	1.18								
48 in. horizontal	**15**		1.20	1.17	1.13	1.11								
12 in. vertical	**16**		1.06	1.02	1.00	0.98	0.968	0.964	0.961					
24 in. vertical	**17**		0.99	0.95	0.90	0.86	0.843	0.832	0.827					
36 in. vertical	**18**		0.95	0.89	0.84	0.79	0.762	0.747	0.740					
48 in. vertical	**19**		0.91	0.85	0.78	0.72	0.688	0.671	0.659					
Fully insulated slab	**20**		0.74	0.64	0.55	0.44	0.373	0.326	0.296	0.273	0.255	0.239	0.227	0.217
Note: These values are used for slab edge conditions with and without carpet.														

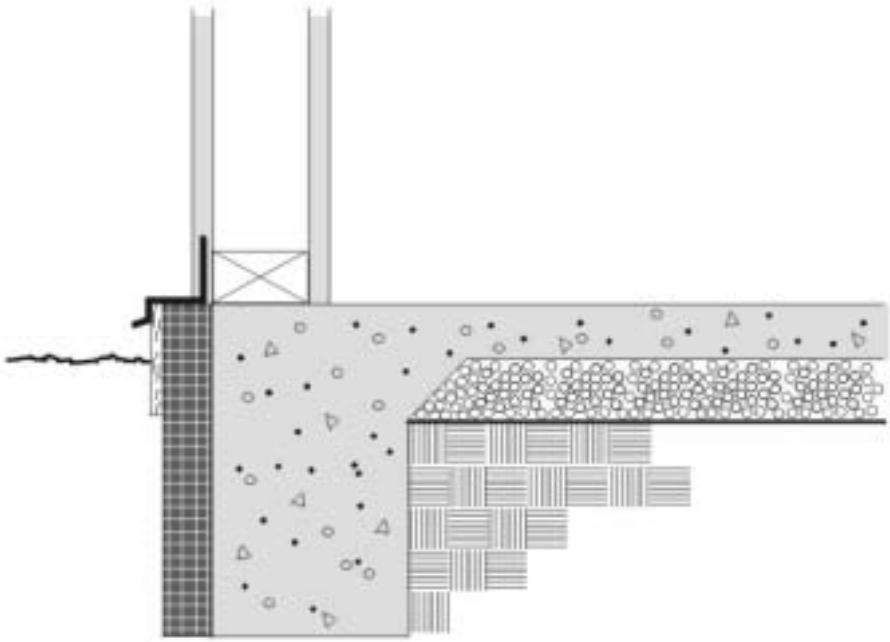

Figure IV.27 – Heated Slab-on-Grade Floor

IV.5 Miscellaneous Construction

Table IV.28 – Opaque Doors

Description		U-factor (Btu/ºF-ft²)
		A
Uninsulated single-layer metal *swinging doors* or *non-swinging doors*, including single-layer uninsulated access hatches and uninsulated smoke vents:	**1**	1.45
Uninsulated double-layer metal *swinging doors* or *non-swinging doors*, including double-layer uninsulated access hatches and uninsulated smoke vents:	**2**	0.70
Insulated metal *swinging doors*, including fire-rated *doors*, insulated access hatches, and insulated smoke vents:	**3**	0.50
Wood *doors*, minimum nominal thickness of 1-3/4 in. (44 mm), including panel *doors* with minimum panel thickness of 1-1/8 in. (28 mm), and solid core flush *doors*, and hollow core flush *doors*:	**4**	0.50
Any other wood *door*:	**5**	0.60

Source: ASHRAE 90.1-2001, Section A7.

IV.6 Modeling Constructions in the Nonresidential ACM

DOE-2 is the reference method for nonresidential ACMs. CALRES is the reference method for residential ACMs. These programs and other approved ACMs may require additional information on the physical properties of materials. With DOE-2, specifying the layers that make up the assembly and defining the fundamental thermal properties for each layer such as thickness, conductivity, density and specific heat may define construction assemblies. CALRES and its derivatives require density, conductivity and volumetric heat capacity and unit interior mass capacity (UIMC). These properties are related to each other so that if you know some of the properties you can calculate the others.

DOE-2 Material Codes

Notes to each of the tables in this joint appendix describe the layers that are used to determine the U-factors. The codes in parenthesis are a reference to the DOE-2 material codes used in the calculations. These codes along with other materials referenced in the notes are shown below. Some of the materials that are used in the standard construction assemblies are not listed as standard DOE-2 materials and in these cases, the "Code" column is shown as "Custom".

Framing/Insulation Layer

With the DOE-2 model, every layer is assumed to be homogeneous, while in reality this is not the case. Framed walls have a layer that includes the framing members with insulation placed between the members. With DOE-2, the layers specified in the footnotes shall be entered and the R-value of insulation/framing layer shall be back calculated to achieve the U-factor shown in the tables in this appendix. The insulation/framing layer shall be modeled with an R-value (no mass), as opposed to entering conductivity, specific heat, density and thickness for the framing layer.

Thermal Mass Properties

When U-factor, C-factor and HC are published, other thermal mass properties may be calculated using the rules described in Table IV.30.

Metal Buildings

Metal building walls and metal building roofs shall be modeled in the DOE-2 reference method as quick surfaces, e.g. thermal mass is not modeled. I these cases, no layers are specified, just the U-factor.

Slabs

For nonresidential buildings, slab edge conditions shall be modeled as 12 in. of concrete and 12 in. of earth, and a layer of insulation exterior to the earth that achieves the F-factors shown in Table IV.26 and Table IV.27.

Table IV.29 – Physical Properties of Materials

Code	Description	R-value	Thickness	Conductivity	Density	Specific Heat
AR02	Asphalt Shingle & Siding	0.44			70.0	0.35
BP01	Building Paper, Permeable Felt	0.06				
PW03	Plywood 1/2 in.	0.63	0.0417	0.0667	34.0	0.29
GP01	Gypsum Board 1/2 in.	0.45	0.0417	0.0926	50.0	0.20
BR01	Built-up Roofing 3/8 in.	0.33	0.0313	0.0939	70.0	0.35
PW05	Plywood 3/4 in.	0.94	0.0625	0.0667	34.0	0.29
PW04	Plywood 5/8 in.	0.78	0.0521	0.0667	34.0	0.29
CP01	Carpet with Fibrous Pad	2.08				0.34
PB01	Particle Board Low Density 3/4 in.	1.39	0.0625	0.0450	75.0	0.31
SC01	Stucco 1 in.	0.20	0.0833	0.4167	116.0	0.20
WD05	Wood, Soft 4 in.	5.00	0.3333	0.0667	32.0	0.33
WD11	Wood, Hard 3/4 in.	0.68	0.0625	0.0916	45.0	0.30
CC03	Heavy Wt. Dried Aggregate 4 in.	0.44	0.3333	0.7576	140.0	0.20
CC14	Heavy Wt. Undried Aggregate 4 in.	0.32	0.3333	1.0417	140.0	0.20
AC02	1/2 in. Acoustic Tile	1.26	0.0417	0.0330	18.0	0.32
AL33	Air Layer 4 in. or more, Horizontal Roof	0.92	1.0000	0.4167	120.0	0.20
CP01	Carpet with Fibrous Pad	2.08				0.34
Custom	Earth (Soil)	3.00	1.5000	0.5000	85.0	0.20
Custom	Logs 6 in.	7.50	0.5000	0.0667	32.0	0.33
Custom	Logs 8 in.	10.00	0.6667	0.0667	32.0	0.33
Custom	Logs 10 in.	12.49	0.8333	0.0667	32.0	0.33
Custom	Logs 12 in.	14.99	1.0000	0.0667	32.0	0.33
Custom	Logs 14 in.	17.49	1.1667	0.0667	32.0	0.33
Custom	Logs 16 in.	19.99	1.3333	0.0667	32.0	0.33
Custom	Earth 12 in.	2.00	1.0000	0.5000	85.0	0.20
Custom	Vented crawspace	6.00	n.a.	n.a.	n.a.	n.a.
Custom	7/8" layer of stucco of R-0.18	0.18	0.0729	0.4167	116.0	0.20
Custom	Straw bale	30.00				
Custom	Acoustic tile + Metal	0.50	0.0417	0.0330	18.0	0.32
Custom	OSB 7/16 in.	0.55	0.0365	0.0667	34.0	0.29

Table IV.30 – Rules for Calculating Mass Thermal Properties From Published Values

Property	Units	Rule for Calculation
Heat Capacity (HC)	Btu/ºF-ft²	From Table IV.12, Table IV.13, or Table IV.14
U-factor	Btu/h-ºF-ft²	From Table IV.12, Table IV.13, or Table IV.14
C-factor	Btu/h-ºF-ft²	From Table IV.12, Table IV.13, or Table IV.14
Thickness (T)	Ft	From Table IV.12, Table IV.13, or Table IV.14
Specific Heat (SH)	Btu/ºF-lb	Assume that the specific heat of all concrete and masonry materials is 0.20 Btu/ºF-lb and that the specific heat of wood or straw (see Table IV.17 and Table IV.18) is 0.39 Btu/ºF-lb.
Weight (W)	lb/ft²	Divide the HC by the assumed specific heat. Wall weight is used with the low-rise residential standards to define a high mass wall.
Density (D)	lb/ft³	Multiply the weight (as calculated above) by the thickness (T)
Conductivity (C)	Btu/h-ºF-ft	Divide the published C-factor by the thickness (T). When only a U-factor is published, calculate the C-factor by assuming an exterior air film of 0.17 and an interior air film of 0.68.