2005 BUILDING ENERGY EFFICIENCY STANDARDS

CALIFORNIA ENERGY COMMISSION

COMMISSION PROPOSED STANDARDS

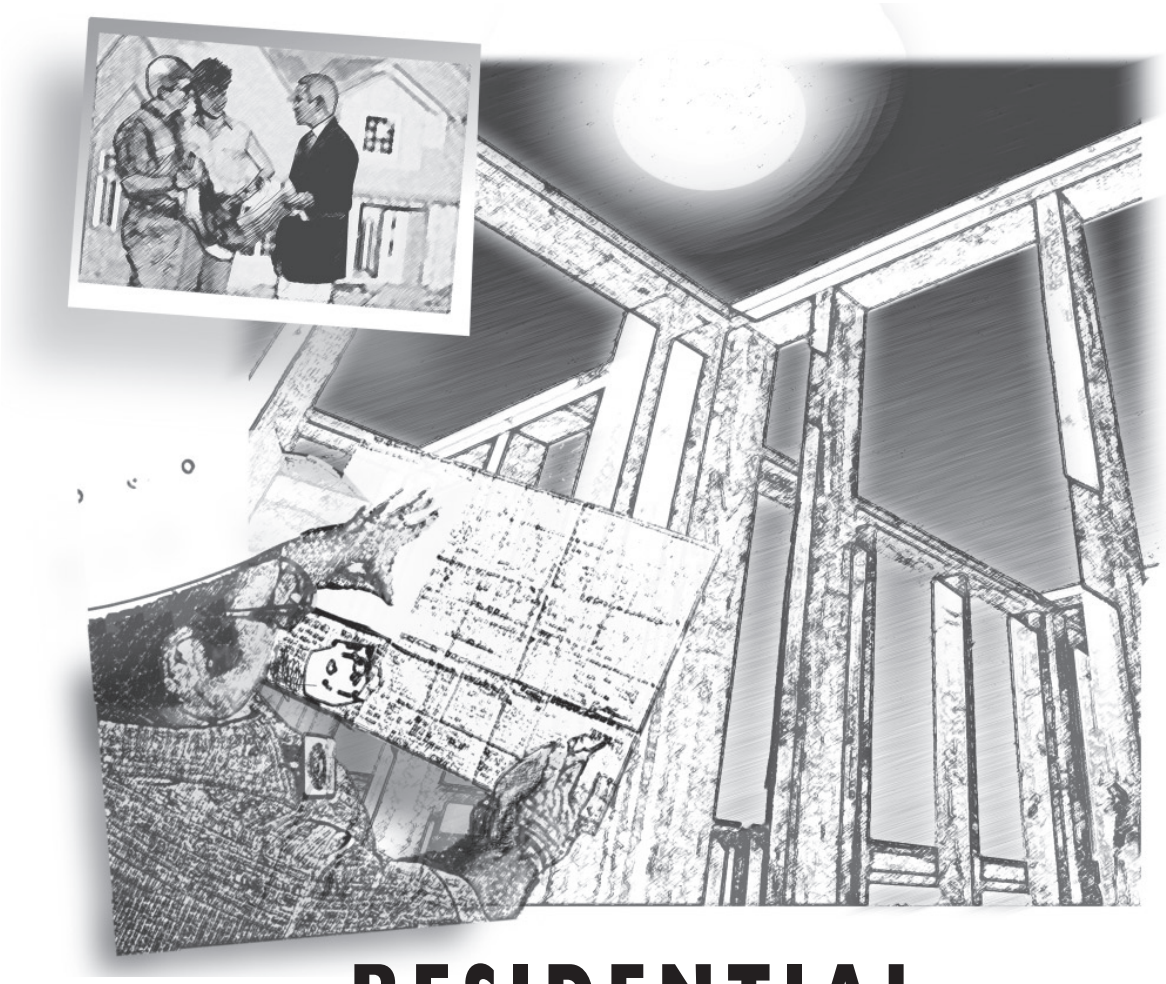

RESIDENTIAL ACM MANUAL

October 2003
P400-03-003ET15
Contract 400-00-061

EXPRESS TERMS – 15 DAY LANGUAGE
October 2003

Gray Davis, Governor

Mary D. Nichols,

Secretary for Resources

CALIFORNIA ENERGY COMMISSION

William J. Keese
Chairman

Commissioners:

Robert Pernell
Arthur H. Rosenfeld
James D. Boyd
John L. Geesman

Robert L. Therkelsen,
Executive Director

Valerie Hall,
Deputy Director
ENERGY EFFICIENCY and DEMAND ANALYSIS DIVISION

Bill Pennington,
Office Manager
Buildings and Appliances Office

2005 Energy Efficiency Standards
Contract # 400-00-061
Bryan Alcorn,
Commission Contract Manager

Prepared by Eley Associates
San Francisco
October 2003

LEGEND FOR 15-DAY LANGUAGE EXPRESS TERMS

1. Energy efficiency standards language added to 2001 standards language to create 45-day Express Terms appears underlined and (in electronic versions) in red.
2. Energy efficiency standards language deleted from 2001 standards language to create 45-day Express Terms appears in ~~strikeout~~ and (in electronic versions) in red.
3. Energy efficiency standards language added to 45-day Express Terms to create 15-day Express Terms appears in double underline and (in electronic versions) in blue.
4. Energy efficiency standards language deleted from 45-day Express Terms to create 15-day Express Terms appears in ~~double strikeout and single underline~~ and (in electronic versions) in blue.
5. Energy efficiency standards language deleted from 2001 standards language to create 15-day language Express Terms appears in ~~double strikeout~~ and (in electronic versions) in blue.

Table of Contents

1. Overview ... 1-1
1.1 Minimum Modeling Capabilities ... 1-2
1.2 Optional Modeling Capabilities ... 1-2
1.3 Application Checklist ... 1-2
1.4 Types of Approval ... 1-3
1.5 Challenges ... 1-4
1.6 Decertification of ACMs ... 1-4
1.7 Alternative ACM Tests ... 1-5
1.8 Approval of New Exceptional Methods ... 1-6

2. Standard Reports ... 2-1
2.1 General ... 2-1
2.2 Certificate of Compliance –Residential Computer Method (CF-1R) ... 2-18

3. Defining the Proposed and Standard Designs ... 3-1
3.1 Building Physical Configuration ... 3-1
3.2 Opaque Envelope Elements ... 3-2
3.3 Fenestration and Doors ... 3-6
3.4 Thermal Mass ... 3-10
3.5 Infiltration/Ventilation ... 3-12
3.6 Heating and Cooling System ... 3-14
3.7 Water Heating ... 3-22
3.8 Additions and Alterations ... 3-25

4. Required Modeling Assumptions and Algorithms ... 4-1
4.1 General Modeling Assumptions ... 4-1
4.2 Heat Gains and Losses Through Opaque Surfaces ... 4-7
4.3 Heat Gains and Losses Through Fenestration ... 4-13
4.4 Thermal Mass ... 4-16
4.5 Infiltration and Natural Ventilation ... 4-17
4.6 Heating Systems ... 4-24
4.7 Air Conditioning Systems ... 4-27
4.8 Duct Efficiency ... 4-32
4.9 Hourly Attic Duct Efficiency Multipliers ... 4-40
4.10 Water Heating Calculations ... 4-41

5. Minimum Capabilities Tests ... 5-49
5.1 Overview ... 5-49
5.2 Space Conditioning Tests ... 5-6
5.3 Water Heating Tests (WH) ... 5-12

6. Optional Capabilities Tests ... 6-1
6.1 Overview ... 6-1
6.2 Optional Space Conditioning Capabilities ... 6-1
6.3 Solar Thermal Water Heating ... 6-12

7. Home Energy Rating Systems (HERS) Required Field Verification And Diagnostic Testing ... 7-1
7.1. California Home Energy Rating Systems ... 7-1
7.2. Measures Required Field Verification and Diagnostic Testing ... 7-1
7.3. Summary of Documentation and Communication ... 7-4
7.4 InstallerRequirements for Installation Certification (CF-6R) ... 7-6
7.5 Verification and Sampling Procedures ... 7-7
7.6 Third Party Quality Control Programs ... 7-9
7.7 Sampling for Additions or Alterations ... 7-10
7.8 Summary of Responsibilities ... 7-11
7.9 Definitions of Terms Used In This Chapter ... 7-13

8. Compliance Supplement 8-1
8.1 CEC Approval 8-1
8.2 Program Capabilities 8-1
8.3 Standard Input/Output Report 8-1
8.4 Fixed and Restricted Inputs 8-1
8.5 Preparing Basic Input 8-2
8.6 Optional Capabilities 8-2
8.7 Special Features and Modeling Assumptions 8-2
8.8 Field Verification 8-2
8.9 Checklist for Compliance Submittal 8-2
8.10 Sample Compliance Documentation 8-2
8.11 Compliance Statement 8-2
8.12 Related Publications 8-2

9. Vendor Requirements Availability to CEC 9-1
9.1 Building Department Support 9-1
9.2 User Support 9-1
9.3 ACM Vendor Demonstration 9-1

List of Tables

Table R2-1 – HVAC Heating Equipment Descriptors 2-33
Table R2-2 – HVAC Cooling Equipment Descriptors 2-34
Table R2-3 – HVAC Distribution Type and Location Descriptors 2-35
Table R2-4 – Hydronic Terminal Descriptors 2-38
Table R2-5 – Water Heating Distribution System (Within Dwelling Units) Descriptors 2-40
Table R2-6 – Control Systems for Multi-Unit Distribution Systems 2-40
Table R2-7 – Water Heater Types 2-41
Table R2-8 – Pipe Conditions for Systems Serving Multiple Dwelling Units 2-41
Table R2-9 – Water Heater Input Summary 2-43
Table R3-1 – Ceiling/Roof U-factors for Standard Design 3-3
Table R3-2 – Wall U-factors for the Standard Design 3-4
Table R3-3 – Floor U-factors for the Standard Design 3-5
Table R3-4 – Slab Edge F-factors for the Standard Design 3-5
Table R3-5 – Allowed Interior Shading Devices and Recommended Descriptors 3-9
Table R3-6 – Standard Design Shading Conditions 3-9
Table R3-7 – Allowed Exterior Shading Devices and Recommended Descriptors 3-10
Table R3-8 – Water Heater Distribution System Choices (Within the Dwelling Unit) 3-23
Table R3-9 – Multiple Dwelling Unit Recirculating System Control Choices 3-23
Table R3-10 – Specification of Standard Design Water Heater 3-24
Table R3-11 – Default Assumptions for Existing Buildings 3-31
Table R4-1 – Hourly Thermostat Set Points 4-3
Table R4-2 – Hourly Internal Gain Schedules 4-6
Table R4-3 – Seasonal Internal Gain Multipliers 4-6
Table R4-4 – Modeling Rules for insulation installation Quality 4-10
Table R4-5 – Monthly and Annual Average Ground Temperatures 4-11
Table R4-6 – Earth Temperatures for Modeling Basement Walls and Floors 4-12
Table R4-7 – Polynomial Coefficients for Angular Dependence 4-14
Table R4-8 – Infiltration Coefficients 4-20
Table R4-9 – Airflow Criteria 4-32
Table R4-10 – Duct Efficiency Input Parameters and Defaults 4-32
Table R4-11 – Location of Default Supply Duct Area 4-33
Table R4-12 – Buried Duct Effective R-values 4-36
Table R4-13 – Duct Leakage Factors 4-37
Table R4-14 – Assumptions for Duct Ambient Temperature (ºF) 4-38
Table R4-15 – Thermal Regain Factors 4-39

Table R4-16 – Coefficients 4-41
Table R4-17 – Seasonal Sol-Air Temperature Difference, °F 4-41
Table R5-18 – Summary of the Space Conditioning Tests 5-7
Table R5-19 – Standard Design Tests 5-10
Table R5-20 – Neutral Variable Design Tests – Space Conditioning 5-11
Table R5-21 – Summary of the Addition-Alone Tests 5-12
Table R5-22 – Summary Existing + Addition + Alternation Tests 5-12
Table R5-23 – Base Case Water Heating Systems 5-13
Table R5-24 – Accuracy Tests – Water Heating 5-14
Table R5-25 – Standard Design Equivalent Tests – Water Heating 5-15
Table R5-26 – Neutral Variable Tests – Water Heating 5-15
Table R6-1 – Summary of the Optional Space Conditioning Tests 6-2
Table R6-2 – Annual Pipe Loss Rates (kBtu/y-ft) 6-6
Table R6-3 – Combined Hydronic System Specifications 6-6
Table R6-4 – OG-300 Solar Systems Tests 6-14
Table R6-5 – Prototype Solar System 6-14
Table R6-6 – OG 100 Solar System Tests 6-15
Table R7-1 – Summary of Measures Requiring Field Verification and Diagnostic Testing 7-3

List of Figures

Figure R2-1 – Overhang Dimensions 2-26
Figure R2-2 – Side Fin Dimensions 2-27
Figure R3-1 – Surface Definitions 3-3
Figure R5-1 – Testing Concept – Discrete Modifications Produce Positive Compliance Margin 5-2
Figure R5-2 – Testing Concept – Discrete Modifications Produce Negative Compliance Margin 5-3
Figure R5-3 – Testing Concept – Discrete Modifications Produce Positive But Small Compliance Margin 5-3
Figure R5-4 – Testing Concept – Discrete Modifications Produce Negative But Small Compliance Margin 5-4
Figure R5-5 – Custom Budget Tests 5-5
Figure R5-6 – Labeling of Computer Simulations 5-5
Figure R5-7 – Prototype Buildings A and B 5-6
Figure R5-8 – Overhang Characteristics 5-9
Figure R5-9 – Side Fins for Optional Capabilities Test 5-9
Figure R5-10 – Prototypes E and F 5-11
Figure R6-1 – Section at Crawlspace Perimeter 6-7
Figure R6-2 – Zoning the Prototype Building 6-9
Figure R6-3 – Sunspace Prototype 6-10
Figure R6-4 – Sunspace Section 6-11

1. Overview

This Manual explains the requirements for approval of residential *Alternative Calculation Methods* (ACMs). Residential ACMs are used to demonstrate compliance with the performance approach to the California Energy Eefficiency Sstandards for Low-Rise Residential Buildings as defined in the building energy efficiency standards of the State Building Code.

The approval procedure is one of self-testing and self-certification by the ACM vendor of an ACM. The vendor conducts the specified tests, evaluates the results and certifies in writing that the ACM passes the tests. The California Energy Commission (Commission) will perform spot checks and may require additional tests to verify that the proposed ACM is suitable for compliance purposes. The vendor is required to develop a compliance supplement (program user manual) explaining how to use the program for showing compliance with the standards. The compliance supplement will also be checked by the Commission for accuracy and ease of use.

When energy analysis techniques are compared, there may beare two basic sources of discrepancies: differences in user interpretation when entering the building specifications, and differences in the ACM's algorithms for estimating energy use. The approval tests in this manual are designed to minimize differences in interpretation by providing explicit detailed descriptions of the test buildings that mustshall be analyzed.

This Manual is written as if all ACMs are computer programs. While this is generally true, there is nothing to prohibit other kinds of energy analysis methods from seeking ACM approval. The basic requirements for accuracy and reliability still apply.

1.1Summary of ACM Changes

The ACM Approval Manual is updated with each major revision of the low-rise residential Standards. This manual is to be used with the 2001 Standards. The major changes between this manual and the 1998 manual are summarized below.

1.1.1Modeling Assumptions

Several changes have been made to the way energy use is calculated in the public domain program, as summarized below.

- Interior Shading
- Space Conditioning System Efficiency (including a variety of assumptions such as air flow, refrigerant charge, fan wattage and efficiency adjusted for California's outdoor operating temperatures)

1.1.2Standard Design Definition

The definition of the standard design (the custom budget building) has been updated to correspond with the performance levels required by the 2001 Standards.

1.2ACM Requirements

This chapter presents the general requirements for residential ACMs. Appropriate inputs for all modeling capabilities are discussed in Chapter 2. Chapter 3 has the rules for defining the *Standard Design*. Chapter 4 has algorithms and modeling assumptions used in the reference method. Chapters 5 and 6 have accuracy tests. Chapter 7 has requirements for field verification and diagnostic testing. Chapters 8 and 9 have requirements for ACM vendors.

~~1.2.1~~1.1 Minimum Modeling Capabilities

Minimum modeling capabilities ~~must~~shall be included in all ACMs. If a candidate ACM does not have all of these capabilities, then it cannot be approved for compliance. The minimum modeling capabilities are summarized below:

- Conduction gains and losses through opaque and fenestration surfaces.
- Infiltration gains and losses
- Solar gains through glazing including the effects of internal shading devices, external shading devices and fixed overhangs.
- Natural ventilation cooling and natural ventilation for Indoor Air Quality (IAQ).
- Mechanical Ventilation for IAQ.
- Thermal mass effects to dampen temperature swings.
- Space conditioning equipment efficiency and distribution systems.
- Water heating equipment efficiency and distribution systems.
- Radiant Barriers
- Cool Roofs
- Maximum Cooling Capacity

~~1.2.2~~1.2 Optional Modeling Capabilities

Candidate ACMs may have more capabilities than the minimum required. ACMs can be approved for use with none, a few, or all of the optional capabilities. The following optional capabilities are recognized for residential ACMs:

- Raised floors with automatically operated crawl space vents.
- Zonal control or multi-zone modeling of the sleeping and living areas of the house.
- Attached sunspaces for collection and possible storage of heat for transfer to the main house.
- Exterior mass walls.
- Side Fin Shading.
- Combined hydronic space and water heating.
- Building additions.
- Solar water heating.
- Form 3 report generator.
- Gas-~~Fired Heat Pumps~~ Absorption Cooling

Many of the optional modeling capabilities have been previously approved by the Commission through the exceptional methods process. The approval tests for optional modeling capabilities are included in Chapter 6. ~~To determine how to apply for the Exceptional Method Application (EMA) to provide optional modeling capability, refer to Section 1.8, Page 1-6 of this Manual.~~

1.3 Application Checklist

The following is a checklist of all the items that ~~must~~shall be included in an application package for ACMs. Some materials are required only for general purpose ACMs and are so indicated.

- *ACM Vendor Certification Statement.* A statement from the ACM vendor certifying the ACM, and, its reliability and accuracy when used for compliance purposes (see ~~Appendix~~ ACM RA-2005~~, Page A-1~~).
- *Computer Run Summary Sheets.* Hard copy summary sheets of all the required computer runs (see ~~Appendix~~ ACM RA-2005~~, Pages A-2 to A-12~~).
- *Computer Runs.* Copies of the computer runs specified in Chapters 5 and 6 of this Manual, including complete input and output files, on diskettes or in ~~IBM-compatible~~ computer readable form acceptable to the Commission to enable spot checks.
- *Compliance Supplement.* A copy of the Compliance Supplement discussed in Chapter 8. The Compliance Supplement and the ACM User's Manual may be combined into the same document.
- *Copy of the ACM.* A magnetic media copy of the ACM (in ~~IBM PC compatible, or other~~ a format agreed to by the Commission staff) for verification of analyses and random verification of compliance analyses. Weather data ~~must~~shall be included.

~~*Weather Data Documentation.* For those general purpose ACMs not using the standard Commission, full year, hourly weather data, a copy of the summarized weather data must~~shall ~~be submitted. Documentation must~~shall ~~be included on the method used to develop the summary weather data.~~

- *Application Fee.* An application fee of $1,000.00 (one thousand dollars) is required to cover costs of evaluating the application.

1.4 Types of Approval

This Manual addresses three types of ACM approval: full approval, streamlined approval of new program features, and amendments to full approvals.

1.4.1 Full Approval

Full approval is required when a candidate ACM has never been previously approved by the Commission, and/or when the ACM vendor makes changes to the executable program code or algorithms, or any other change that in any way affects the results. The Commission may also require that all ACMs be approved again when the standards are updated on the three-year cycle or whenever substantial revisions are made to the approval process, for instance, if new analysis capabilities come into widespread use, and the Commission declares them to be minimum capabilities for all ACMs.

When re-approval is necessary, the Commission will notify all ACM vendors of the timetable for renewal. There will also be a revised ACM Approval Manual published, with complete instructions for re-approval.

Full approval is required for all ACM changes, unless they qualify for the streamlined approval process or for an addendum, as discussed below.

1.4.2 Streamlined Approval

Certain types of changes may be made to approved residential ACMs through a streamlined procedure. Examples of changes that qualify for streamlined approval are modifications to the user interface or implementation on a different operating system as long as there are no changes to the executable program code that would in anyway affect the results.

If an ACM modification qualifies for streamlined approval, then the following procedure is followed:

- The ACM vendor prepares an addendum to the compliance supplement, when appropriate, describing the change to the ACM.
- The ACM vendor notifies the Commission by letter of the change. The letter ~~must~~shall describe in detail the nature of the change and why it is being made. The notification letter shall be included in the Compliance Supplement.

- Provide the Commission with an updated copy of the ACM and include any new reports created by the ACM (or modifications in the standard reports).
- The Commission responds in 45 days. The Commission response may take several forms. The Commission may request additional information, refuse to approve the change or require that the ACM vendor make specific changes to either the Compliance Supplement addendum or the ACM.
- With Commission approval, the vendor may issue new copies of the ACM with the Compliance Supplement addendum and notify ACM users and building officials.

1.4.3 Amendments

An ACM approval ~~must~~shall be amended when optional modeling capabilities are added. The vendor ~~must~~shall provide the additional computer runs required for the optional modeling capability. It is not necessary to include computer runs previously submitted.

An amendment to an approved ACM ~~must~~shall be accompanied by a cover letter explaining the type of amendment requested, and copies of other documents as necessary. All items on the application checklist should be submitted, when applicable. The timetable for approval of amendments is the same as for full approval.

1.4.4 When Approval Is Not Required

Changes that do not affect compliance with the Energy Efficiency Standards for Residential Buildings do not require full or streamlined approval. However, the ACM vendor ~~must~~shall notify the Commission and provide the Commission with an updated copy of the program and user manual. Re-approval is required for any ACM program change that affects the energy use calculations for compliance, the modeling capabilities for compliance, the format and/or content of compliance forms, or any other change which would affect a building's compliance with the Standards. Any questions regarding applicable approval procedures should be directed to the Commission.

1.5 Challenges

Building officials, program users, program vendors or other interested parties may challenge any residential ACM approval. If any interested party believes that a compliance program, an algorithm, or method of calculation used in a compliance program, a particular capability or other aspect of a program provides inaccurate results, the party may challenge the program. ~~(See Section Decertification of ACMs, for a description of the process for a challenge.)~~

1.6 Decertification of ACMs

The Commission may *decertify* (rescind approval of) an alternative calculation method through various means:

- All ACMs are decertified when the standards undergo substantial changes, which usually occurs every three years.
- Any ACM can be decertified by a letter from the ACM vendor requesting that a particular version (or versions) of the ACM be decertified. The decertification request ~~must~~shall briefly describe the nature of the program errors or "bugs" which justify the need for decertification.
- Any "initiating party" may commence a procedure to decertify an ACM according to the steps outlined below. The intent is to include a means whereby serious program errors, flawed numeric results, improper forms and/or incorrect program documentation not discovered in the certification process can be verified, and use of the particular ACM version discontinued. In this process, there is ample opportunity for the Commission, the ACM vendor and all interested parties to evaluate any alleged errors in the ACM program.

Process. Following is a description of the process for challenging an ACM or initiating a decertification procedure:

1. Any party may initiate a review of an ACM's approval by sending a written communication to the Commission's Executive Director. (The Commission may be the initiating party for this type of review by noticing the availability of the same information listed here.)

   The initiating party shall:

   (a) State the name of the ACM and the program version number(s) which contain the alleged errors;

   (b) Identify concisely the nature of the alleged errors in the ACM which require review;

   (c) Explain why the alleged errors are serious enough in their effect on analyzing buildings for compliance to justify a decertification procedure; and,

   (d) Include appropriate data electronically (in a format agreed to by the Commission staff) ~~on IBM PC compatible floppy diskettes~~ and/or information sufficient to evaluate the alleged errors.

2. The Executive Director shall make a copy or copies of the initial written communication available to the ACM vendor and interested parties within 30 days.

3. Within 75 days of receipt of the written communication, the Executive Director may request any additional information needed to evaluate the alleged ACM errors from the party who initiated the decertification review process. If the additional information is incomplete, this procedure will be delayed until the initiating party submits complete information.

4. Within 75 days of receipt of the initial written communication, the Executive Director may convene a workshop to gather additional information from the initiating party, the ACM vendor and interested parties. All parties will have 15 days after the workshop to submit additional information regarding the alleged program errors.

5. Within 90 days after the Executive Director receives the application or within 30 days after receipt of complete additional information requested of the initiating party, whichever is later, the Executive Director shall either:

   (a) Determine that the ACM need not be decertified; or,

   (b) Submit to the Commission a written recommendation that the ACM be decertified.

6. The initial written communication, all other relevant written materials and the Executive Director's recommendation shall be placed on the consent calendar and considered at the next business meeting after submission of the recommendation. The matter may be removed from the consent calendar at the request of any person.

7. If the Commission approves the ACM decertification, it shall take effect 60 days later. During the first 30 days of the 60 day period, the Executive Director shall send out a Notice to Building Officials and Interested Parties announcing the decertification.

All initiating parties have the burden of proof to establish that the review of alleged ACM errors should be granted. The decertification process may be terminated at any time by mutual written consent of the initiating party and the Executive Director.

As a practical matter, the ACM vendor may use the 180- to 210-day period outlined here to update the ACM program, get it re-approved by the Commission, and release a revised version that does not contain the bugs initially brought to the attention of the Commission. Sometimes the ACM vendor may wish to be the initiating party to ensure that a faulty program version is taken off the market.

1.7 Alternative ACM Tests

This Manual provides tests to verify that ACMs are accurate. These tests are provided in Chapters 5 and 6 of the Manual. An ACM vendor may propose alternate tests when the vendor believes that one or more of the standard tests are not appropriate for the ACM. Alternate tests will be evaluated by the Commission and will be

accepted if they are considered reasonable. If accepted, the alternate test(s) will be added to this manual as an addendum and the alternate test(s) will be available for use by all ACMs. The alternate test will coexist with the standard test presented in this Manual until the Manual is revised. When a new version of this Manual is produced, the alternative test may be substituted for the current test or may continue to coexist with the original test.

1.8 Approval of New Exceptional Methods

The Commission may approve new exceptional methods. Exceptional methods are special modeling capabilities or calculation methods necessary to recognize building features that cannot be adequately modeled with existing ACMs. When an Exceptional Method is approved, a new optional capabilities test may be approved as part of the process. Exceptional Methods do not necessarily produce optional capabilities for ACMs. For instance, radiant heating systems are recognized by an adjusted equipment efficiency that may be used directly in ACMs or other compliance methods. To be approved for the new optional capability, vendors ~~must~~shall amend their ACM approval.

Even if an ACM already incorporates the Exceptional Method, the vendor ~~must~~shall receive approval to use the Exceptional Method in the compliance process. The ACM vendor ~~must~~shall demonstrate that the ACM automatically uses the correct fixed and restricted inputs for the Exceptional Method and that the standard reports identify the building feature(s) recognized by the Exceptional Method. Additionally, the ACM compliance supplement ~~must~~shall be updated, referencing the use of the new Exceptional Method.

To receive a copy of the Exceptional Method contact the Residential Office at (916) 654-4064.

2. Standard Reports

2.1 General

For consistency and ease of enforcement, the manner in which building features are reported by ACMs ~~mustbe~~ is standardized. This section of the ACM Approval manual describes the required standard reports. All residential ACMs ~~must~~shall automatically produce compliance reports ~~in the Commission-prescribed format~~ as specified in ~~the following sections of this Manual~~this Chapter. These *Standard Reports* are required to enable building officials to evaluate the results from ACMs without having to learn each computer program. Included in every compliance package will be reports CF-1R and ~~C-2R~~other related forms, which are described in detail below.

~~Both the~~ The CF-1R ~~and the C-2R must~~shall have two highly visible sections, one for *Special Features and Modeling Assumptions* and a second for features requiring *Field Verification and Diagnostic Testing*~~by approved home energy rating system (HERS) providers~~. These two sections serve as "punchlists" ~~for special consideration~~ during compliance verification by the local building department. Items listed in the *Special Features and Modeling Assumptions* section indicate the use for compliance of unusual features or assumptions, and call for special care by the local building department. Items listed in the *Field ~~HERS Required~~ Verification and Diagnostic Testing* section are for features that ~~rely on~~ require diagnostic testing or independent verification ~~by HERS raters under the supervision of Commission-approved HERS providers~~ to insure proper field installation in addition to local building department inspection.

Only user inputs are described and included in the standard reports. The fixed and restricted inputs are not included in the standard reports since ACMs ~~must~~shall be designed so that the fixed and restricted inputs and default values in the absence of specific user input are automatically used when the program is used for compliance.

~~For compliance forms, t~~The structure and organization of the Standard Reports described in the subsequent sections should be followed as closely as possible. The reports are divided into tabular listings that have a title, column headings and data entries. The data entries shown in the listings that appear in this manual are typical values and are included only to illustrate the report format; they are not default values and cannot be assumed to be in compliance with the standards. The specification of the category or type of data expected in each field is provided in the list of definitions associated with each column heading. The type of data entries will be one of the following:

- Text: A variable-length text field input by the user.
- Recommended Descriptor: An abbreviation or short name from lists or tables of permissible types provided within this manual (e.g., LgStoGas). Only types found in these lists or tables may be used. Different descriptors may be used by the ACM as long as they are reasonable descriptors for the list entry item and are not misleading. In some cases where the descriptor is a short complete word, the descriptors are prescribed and ~~must~~shall be used. Even for prescribed descriptors some discretion is allowed. For example, for tables with long rows Y may be used for the prescribed descriptor Yes. User-defined descriptors may NOT be used but rather ~~must~~shall be automatically assigned by the ACM based upon user input. For example, UWALL01 may be assigned by the ACM to the first user-defined wall type.
- Filename.ext: The name of the input or output file
- Dimensions or units of measure, such as "hr-~~ft2~~ft^2-~~F~~°F /Btu", ~~ft2~~ft^2, etc.
- Num: A cardinal or ordinal number.

~~Modifications~~ Deviations from the standard reports will be approved by the Commission on a case-by-case basis when they are necessary because of conceptual differences between ACMs or because of special modeling features. The categories of information represented in the tables and the standard headings ~~must~~shall not be changed. Additional columns or additional tables may be added when necessary and column

headings may be abbreviated, and reports may be reformatted with different character spacing, line spacing, row heights or column widths to permit better readability or paper conservation. ACMs may also provide additional customized information at the bottom of the standard reports, separated from the standard report by a line.

Some of the tables in the standard reports are not applicable for all buildings. When a table is not applicable for a particular building, it should be omitted. When one of the standard tables is included, all the columns should be included (although column width may be reduced), even if some of the information in the columns is not applicable to the proposed design.

The Standard Reports are designed to accommodate the optional modeling capabilities included in this manual. Approval of additional optional modeling capabilities may require modification of the standard report format.

~~2.12.2 Certificate of Compliance (CF-1R)~~

~~***The Certificate of Compliance (report CF-1R) is the first standard report that must be produced. The Certificate of Compliance is required by the Administrative Requirements (Title 24, Section 10).***~~

~~HeadingThe following heading shall appear on the first page.~~

~~CERTIFICATE OF COMPLIANCE: RESIDENTIAL~~		~~Page 1 of 2CF-1R~~
~~Project Title~~	~~Filename:~~	~~Date:~~
~~Project Address~~	~~Run Title:~~	~~<runcode>~~
~~Documentation Author~~		~~<initiation time>~~
~~Telephone~~		~~Building Permit #~~
~~Compliance Method~~		~~Plan Check / Date~~
~~Location/Climate Zone~~		~~Field Check/ Date~~

~~The Filename, Run Title, Runcode, and Initiation Time need not appear in the header as shown above but must appear as part of the header information for all pages of the Certificate of Compliance.~~

~~Subsequent pages shall have the following heading.~~

~~CERTIFICATE OF COMPLIANCE: RESIDENTIAL~~		~~Page 2 of 2CF-1R~~
~~Project Title~~	~~Filename:~~	~~Date:~~
	~~Run Title:~~	~~<runcode/initiation time>~~

~~1.Project Title, Date, Project Address, Documentation Author and Telephone, and Climate Zone (text): Display user inputs for these fields.~~

~~Filename (filename.ext): The filename of the input file used to generate the compliance form.~~

~~Compliance Method (text): The Alternative Calculation Method program name and version number (e.g., CALRES2_v2.01)~~

~~<Runcode/Initiation Time> (alphanumeric text): A unique runcode designation generated automatically by the ACM to identify the specific run. This number and the initiation time changes with each run initiated by the user even though the filename and Run Title may remain the same. The initiation time is the time (including the hour and minute) that the compliance run was initiated by the user.~~

- Run Title (text): Optional user input item. Use for commentary or description of unique characteristics of a particular run.

General Information

This listing in the Certificate of Compliance follows the first page heading on both the CF-1R and the CF2-R and provides basic information about the building. The items and information listed on the Certificate of Compliance are identical to some of the items and information found in the Computer Method Summary (C-2R). A description of these data elements is given later in this chapter.

GENERAL INFORMATION

Conditioned Floor Area:	1384 ft²
Average Ceiling Height	10.2 ft.
Building Type:	Single Family Detached
Building Front Orientation:	15 deg (North)
Glazing Area as % of Floor Area	14.4%
Average Fenestration U-Value	0.52
Average Fenestration SHGC	0.60
Number of Stories	2
Number of Dwelling Units:	1
Floor Construction Type:	Raised Floor

Building Insulation

This listing summarizes the insulation levels and conditions for the opaque surfaces of the building and slab perimeters. A separate row is to be provided for each unique condition. If a radiant barrier is used for a roof, the ACM is required to report this feature. The ACM may either add a column, titled "Radiant Barrier" and place the word "Yes" in the corresponding row, or the words "Radiant Barrier" are to be automatically placed in the Location/Comments field in the row associated with the roof surface having the radiant barrier."

Metal-framed walls are reported in the frame type column. The use of metal-framed walls must be reported in the *Special Features and Modeling Assumptions* listing since metal framing reduces the effective R-value of cavity insulation by short circuiting heat flow.

BUILDING INSULATION

Component Type	Frame Type	Cavity Insulation R-value	Sheathing Insulation R-value	Total R-value	Assembly U-value	Location/Comments
Wall	Wd2x4@16"oc	R-11	R-4	15.38	0.065	typical
Wall	Mtl2x4@16"oc	R-13	R-7	12.20	0.082	at garage
Mass Wall	n/a	R-5	R-0	6.29	0.159	Foundation
Roof	Wd2x6@24"oc	R-38	R-0	38.5	0.026	Attic w/Radiant Barrier
Roof	Wd2x10@24"oc	R-30	R-0	29.41	0.034	Vaulted Ceiling
Door	n/a	R-0	R-0	3.03	0.33	
Floor	Wd2x12@24"oc	R-19	R-0	27.03	0.037	crawl space
Floor	Wd2x10@16"oc	R-19	R-0	20.83	0.048	Over garage
Slab Perimeter	n/a	R-7	n/a			F2 = 0.76 uninsulated

- *Component Type*. Possible types are wall, mass wall, door, ceiling or roof, floor over crawl space, exposed floor, slab perimeter, etc.
- *Frame Type*. Framing information shall include framing material [wood (*Wd*) or metal (*Mtl*) alternatively steel (*Stl*) or aluminum (*Alu*)], the nominal size of framing members [e.g. 2x4 for nominal 2" x 4"], and their nominal spacing [@16"oc for "at 16 inches on center"]. Metal framing is presumed to be steel framing unless otherwise coded.
- Cavity *Insul R-value*. The R-value of the cavity insulation alone, not including framing effects, dry wall, air films, etc. If no insulation is proposed, the response may be "none".
- *Total R-value*. The number one divided by the *Assembly U-Value* (the inverse of the *Assembly U-Value* or $1/U_{assembly}$) rounded to two digits to the right of the decimal point.
- *Sheathing Insul. R-value:* The sum total R-value of continuous insulation layers which are not penetrated by framing members. These are for layers used specifically for insulation (R-2 or greater) and do not include interior or exterior finish materials such as drywall or exterior siding layers unless they have significant thermal resistance. For slabs-on-grade, report the R-value of slab-edge insulation.
- *Assembly U-value*. The U-value for the assembly, including framing effects. Calculated U-values are rounded to three digits to the right of the decimal point. (U-values are calculated using standard engineering principles as documented in the Glossary, Appendix G of the *Residential Manual* under *R-Value*)
- *Location/Comments*. A description of where the component is located or other relevant information.

Floors

This listing summarizes floor types and surface areas. The ACM shall use this information to determine the thermal mass for the Standard Design and the default thermal mass for the Proposed Design. This listing must include all conditioned floor area and may include listings of unconditioned floor types and areas.

FLOOR TYPES AND AREAS

Construction Type	Area (ft^2)	Conditioned?	Location/Description
Slab	1086	Yes	1st Floor
Slab	226	No	Garage
NonSlab	675	Yes	2nd Floor

- *Construction Type:* The construction type of the floor. Construction type is either *Slab or NonSlab Floor*. A *Slab* floor includes slab-on-grade floors and raised slab floors with conditioned space above and unconditioned space below. Raised slab floors with conditioned space above and below are considered *NonSlab* floors for this categorization. Floors with unconditioned space above may be either *Slab* or *NonSlab*.
- *Area (ft^2)*. The area of the mass element in square feet.
- *Conditioned?*: The conditioning status of the air immediately above the floor. *Yes* indicates that the air is conditioned and *No* indicates that the air above this part of the floor is unconditioned. An ACM may exclude this column if it is clear to the user that all entries for floor area are for conditioned floor area only. If the ACM excludes this output column, the ACM must assign all user entered floor areas as conditioned floor areas and spaces with unconditioned floor areas such as sunspaces shall not be modeled.
- *Location/Description*. A description of the location of the floor.

Fenestration Surfaces

The term "fenestration" is used to refer to an assembly of components consisting of frame and glass or glazing materials. According to the standards, fenestration includes "any transparent or translucent material plus

~~frame, mullions, and dividers, in the envelope of a building." Fenestration surfaces include windows, skylights and glazing in doors or other transparent or translucent surfaces. This listing reports information about each fenestration surface. One row is to be included in the listing for each unique fenestration condition. When compliance is for all orientations, the building facade orientations shall be reported for the case with the "front" facing north or the orientation shall be reported as "*Any*", and the *Special Features and Modeling Assumptions* listings must also indicate that compliance is for all orientations.~~

~~FENESTRATION SURFACES~~

~~Fenestration #/Type/Orien~~	~~Orien-tation~~	~~Area (ft^2)~~	~~Fenestration U-factor~~	~~Fenestration SHGC~~	~~Exterior Shading Att.~~	~~Over-hang /Fins~~
~~1 Wdw Front~~	~~N~~	~~10~~	~~0.65~~	~~0.70~~		~~None~~
~~2 Wdw Front~~	~~NW~~	~~40~~	~~0.65~~	~~0.60~~		~~None~~
~~3 Wdw Front~~	~~N~~	~~8~~	~~1.23~~	~~1.23~~	~~NA~~	~~None~~
~~4 Wdw Left~~	~~W~~	~~110~~	~~0.65~~	~~0.65~~	~~Shade-screen~~	~~None~~
~~5 Wdw Back~~	~~S~~	~~50~~	~~0.65~~	~~0.65~~		~~Ovhg~~
~~6 Wdw Back~~	~~S~~	~~8~~	~~1.23~~	~~1.23~~		~~None~~
~~7 Wdw Right~~	~~E~~	~~85~~	~~0.65~~	~~0.65~~		~~None~~
~~8 Sky Back~~	~~S~~	~~8~~	~~1.23~~	~~1.23~~		~~None~~
~~9 Sky Horz~~	~~NA~~	~~22~~	~~1.23~~	~~1.23~~		~~None~~

- ~~*Fenestration Surface: Num/Type/Loc (#/text/prescribed descriptor). Num* is a unique number assigned by the user to each fenestration item in the fenestration surfaces list (see Computer Method Summary; C-2R). The type is Wdw (window) Dr (door) or Sky (skylight). *Loc* is the location of the surface with respect to the front of the building (Front, Back, Left, Right orNA).~~

- ~~*Orientation* (prescribed descriptor) is reported here as the nearest 22.5° compass point in parenthesis (N, NNE, NE, ENE etc.). *Orientation* may also be reported to the nearest degree (0°-360°). When compliance is for all orientations, orientation may be listed as *All* or only the *Loc* need be reported or *Orientation* may be reported with Front facing North.~~

- ~~*Area (ft^2).* The rough frame area of the fenestration in square feet.~~

- ~~*U-factor.* The rated U-factor of the fenestration product, in Btu/h-ft^2-°F, including air films. Calculated fenestration U-factors are rounded and reported to 2 digits to the right of the decimal.~~

- ~~*Fenestration SHGC:* The Solar Heat Gain Coefficient (SHGC) for this fenestration system typically the glazing plus the frame. This value corresponds to the rated value reported on a Commission-approved label, a Commission default value reported on a manufacturer's label, or a Commission default value for a carpenter's window.~~

- ~~*Exterior Shading Att.:* A verbal description of the exterior shading attachment, when applicable. Only a limited number of shading attachments may be used for shading credit in the performance approach. The exterior shading attachments and their allowed SHGCs are listed in Table R2-1 - Allowed Exterior Shading Devices and Recommended Descriptors below:~~

- ~~"Standard" (Default Bug Screen) or " " must automatically appear when no special exterior shading device is included in the building plans. The standard design assumes that Standard or default partial bugscreen coverage credit is used for all windows. The proposed design assumes that Standard is used for all windows unless other exterior shading attachments are specified. Standard credit has been reduced to account for the fact that bugscreens will only cover a portion of all windows in a house or residence. A user claiming credit for any ordinary bugscreens must use Standard as the input for the exterior shading device modeled.~~

Table R2-1 - Allowed Exterior Shading Devices and Recommended Descriptors

Recommended Descriptor	**Exterior Shading Device Reference**	**Solar Heat Gain Coefficient**
Standard	Bugscreens or No Shading - Default Bug Screens are modeled.	0.76
WvnScrn	Woven SunScreen (SC<0.35)	0.30
LvrScrn	Louvered Sunscreen	0.27
LSASnScrn	LSA Sunscreen	0.13
RlDwnAwng	Roll-down Awning	0.13
RlDwnBlnds	Roll-down Blinds or Slats	0.13
None 1	For skylights only - No exterior shading	1.00
Note 1: None is the default for fenestration tilted less than 60 degrees from horizontal (skylights) and is only allowed for fenestration tilted less than 60 degrees from horizontal (skylights)., i.e. None is not an exterior shading option for ordinary vertical windows.		

- *Overhangs/Fins:* An indication of whether or not the fenestration is shaded by overhangs or fins [*Ovhg, Fins, Both, None]*

Thermal Mass

This listing summarizes thermal mass elements in the proposed design. Note that ACMs must require the input of conditioned slab floor area and the conditioned nonslab floor area prior to the entry of special thermal mass features. These two areas determine the thermal mass for the Standard Design and the default thermal mass for the Proposed Design. The specific thermal mass for the proposed design is ONLY modeled if the thermal mass for the proposed design exceeds a specific threshold, otherwise the default thermal mass is modeled for both the Proposed and Standard Designs (See Sections 3.6 and 3.7 for more details). This *Thermal Mass* listing **must not** be reported unless the Proposed Design's thermal mass exceeds the mass credit threshold. When the thermal mass in the *Proposed Design* is greater than the threshold mass it must be reported in this format and it **must automatically** be reported in the *Special Features and Modeling Assumptions* listing and independently verified by the local enforcement agency.

THERMAL MASS

Type/Covering	Area (ft^2)	Thickness	Location/Description
Slab Exposed	120	3.5 in	Kitchen entry
Slab Covered	250	3.5 in	Kitchen dining
Nonslab	980	0	All Other
Tile	34	0.5 in	Bath

- *Type/Covering.* The type of mass and the surface condition (exposed or covered). The types described in the *Residential Manual* Glossary may be used.
- *Area (ft^2).* The area of the mass element in square feet.
- *Thickness.* The mass thickness in inches.
- *Location/Description.* A verbal description of the location of the mass or other special features.

Infiltration/Ventilation

This listing is only produced when the applicant has used reduced infiltration measures or mechanical ventilation measures to improve the overall energy efficiency of the Proposed Design while maintaining adequate air quality. The use of reduced infiltration requires diagnostic blowerdoor testing by a certified HERS rater to verify the modeled reduced leakage area and to ensure minimum infiltration/ventilation rates are

~~achieved. Relevant information regarding infiltration and ventilation must be reported in the *HERS Required Verification* listings on the CF-1R and the C-2R. The listings must indicate that diagnostic blower door testing must be performed as specified in ASTM E 779-87 (Reapproved 1992), *Standard Test Method for Determining Air Leakage Rate by Fan Pressurization*. This listings must also report the target $CFM50_H$ required for the blowerdoor test to achieve the modeled SLA and the minimum $CFM50_H$ (corresponding to an SLA of 1.5) allowed to avoid backdraft problems. This minimum allowed value is considered by the Commission to be "unusually tight" per the requirements of the Uniform Mechanical Code~~

~~When the target $CFM50_H$ of the *Proposed Design* is below the value corresponding to an SLA of 3.0, mechanical ventilation with a minimum capacity of 0.047 CFM per square foot of conditioned floor area is required. This requirement for mechanical ventilation and minimum capacity must be reported in the *HERS Required Verification* and the *Special Features and Modeling Assumptions* listings of the CF-1R and C-2R. Also, the *HERS Required Verification* listings must state that when the measured $CFM50_H$ is less than the minimum allowed value, corrective action must be taken to either intentionally increase the infiltration or provide for mechanical supply ventilation adequate to maintain the residence at a pressure greater than -5 pascals relative to the outside average air pressure with other continuous ventilation fans operating. Mechanical ventilation may also be used in conjunction with reduced infiltration to achieve even greater energy savings. When mechanical ventilation is part of the Proposed Design the exhaust and supply fan wattages must be reported in this listing and the *HERS Required Verification* listings. Whenever mechanical ventilation is modeled by the user or required by modeling an SLA of 3.0 or less, the mechanical ventilation capacity selected by the user must be greater than or equal to 0.047 cfm per square foot of conditioned floor area to be modeled by an approved ACM. If the user enters a volumetric capacity that is less than 0.047 cfm/ft^2, the ACM must indicate an input error to the user and block compliance output.~~

~~When reduced infiltration or mechanical ventilation is modeled, the *Special Features and Modeling Assumptions* listings must include a statement that the homeowner's manual provided by the builder to the homeowner must include instructions that describe how to use the operable windows or mechanical ventilation to provide for proper ventilation.~~

~~INFILTRATION/VENTILATION DETAILS *(Example Listing)*~~

~~Blower Door Leakage Target ($CFM50_H$/SLA)~~	~~Blower Door Leakage Minimum ($CFM50_H$/SLA)~~	~~Vent. Fan CFM (Supply/Exhaust)~~	~~Mechanical Vent Fans (Watts) [Supply/Exhaust]~~
~~1250/2.9~~	~~586/1.5~~	~~200/300~~	~~*50/75*~~

- ~~*Blower Door Leakage Target ($CFM50_H$/SLA):* The measured blower door leakage in cfm at 50 pascals of pressurization and its equivalent Specific Leakage Area (SLA) value.~~
- ~~*Blower Door Leakage Minimum ($CFM50_H$/SLA):* The backdraft limit for the blower door leakage test which corresponds to a Specific Leakage Area (SLA) of 1.5 which is considered to be "unusually tight" and must satisfy the Uniform Mechanical Code requirements for "unusually tight" construction. The ACM must report in the *HERS Required Verification* listings that the Commission considers this minimum CFM and the corresponding SLA of 1.5 or less to be "unusually tight" per the Uniform Mechanical Code. In the sample listing given above a 1600 square foot house and the SLA lower limit of 1.5 is used to get the *Blower Door Leakage Minimum* shown.~~
- ~~*Vent. (Ventilation) Fans (CFM):[Supply/Exhaust]* The total volumetric capacity of supply fans and exhaust fans listed separately, separated by a slash (or reported in separate columns). The balanced portion of mechanical ventilation is the smaller of these two numbers while the unbalanced portion is the difference between these two numbers. These values are reported in cubic feet per minute.~~
- ~~*Mechanical Vent. (Ventilation) Fans (Watts) [Supply/Exhaust]:* The total power consumption of the supply ventilation fans and the total power consumption of the exhaust ventilation fans in watts.~~

~~HVAC Systems~~

~~This listing provides data on the heating and cooling systems in the building. These data are identical to those in the Computer Method Summary (Report C-2R) under "HVAC Systems" described on Page 2-28~~

~~HVAC SYSTEMS~~

~~System Name~~	~~System Type~~	~~Refrigerant Charge and Airflow~~	~~Minimum Equipment Efficiency~~	~~Distribution Type and Location~~	~~Duct R-value~~
~~Zone=Living~~					
~~LowerHeat~~	~~GasFurnace~~	~~N/A~~	~~0.78 AFUE~~	~~DuctsCrawl~~	~~4.2~~
~~LowerAC~~	~~AirCond-Split~~	~~Yes~~	~~10.0 SEER~~	~~DuctsCrawl~~	~~4.2~~
~~Zone=Sleep~~					
~~UpperHeat~~	~~Electric~~	~~N/A~~	~~1.00 COP~~	~~Baseboard~~	
~~UpperAC~~	~~AirCond-Split~~	~~No~~	~~10.0 SEER~~	~~DuctsAttic~~	~~4.2~~

- ~~*System Name (text):* A unique name for the HVAC system~~
- ~~*System Equipment (recommended descriptor):* The type of HVAC equipment. This is specified separately from the distribution type. Permissible equipment types: Listed in Table R2-2 and Table R2-3. In the case of *CombHydro* heating, the name of the water heating system should be identified in the previous column. When the proposed house is not air conditioned, the entry should be *NoCooling*. If more than one type of equipment is specified, each must be listed on separate rows.~~
- ~~*Refrigerant Charge and Airflow:* Whether the refrigerant charge and airflow is verified or a thermostatic expansion valve is included for ducted central systems. The choices are 'yes' or 'no' where "yes" means that either refrigerant charge and airflow are verified or a TXV is installed. Only split system equipment (*SplitAirCond and SplitHeatPump)* can be modeled with refrigerant charge and airflow verification. Six equipment types can be modeled with a TXV. They are: *SplitAirCond, PkgAirCond, LrgPkgAirCond, SplitHeatPump, PkgHeatPump, LrgPkgHeatPump.* See Table R2-3 - HVAC Cooling Equipment Descriptors for a description of equipment.~~

~~Table R2-2- HVAC Heating Equipment Descriptors~~

~~Recommended Descriptor~~	~~Heating Equipment Reference~~
~~CntrlFurnace~~	~~Gas- or oil-fired central furnaces, propane furnaces or heating equipment considered equivalent to a gas-fired central furnace, such as wood stoves that qualify for the wood heat exceptional method. Gas fan-type central furnaces have a minimum AFUE=78%. Distribution can be gravity flow or use any of the ducted systems. [Efficiency Metric: AFUE]~~
~~Heater~~	~~Non-central gas- or oil-fired space heaters, such as wall heaters floor heaters or unit heater. Equipment has varying efficiency requirements. Distribution is ductless and may be gravity flow or fan-forced.. Can refer to floor furnaces and wall heaters within the description field for CntrlFurnaces, [Efficiency Metric: AFUE]~~
~~Boiler~~	~~Gas or oil boilers. Distribution systems can be Radiant, Baseboard or any of the ducted systems. Boiler may be specified for dedicated hydronic systems. Systems in which the boiler provides space heating and fires an indirect gas water heater (IndGas) may be listed as Boiler/CombHydro Boiler and must be listed under "Equipment Type" in the HVAC Systems listing. [Efficiency Metric: AFUE]~~
~~SplitHeatPump~~	~~Heating side of central split system heat pump heating systems. Distribution system must be one of the ducted systems. [Efficiency Metric: HSPF]~~
~~PkgHeatPump~~	~~Heating side of central packaged heat pump systems. Central packaged heat pumps are heat pumps in which the blower, coils and compressor are contained in a single package, powered by single phase electric current, air cooled, rated below 65,000 Btuh. Distribution system must be one of the ducted systems. [Efficiency Metric: HSPF]~~
~~LrgPkgHeatPump~~	~~Heating side of large packaged units rated at or above 65,000 Btu/hr (heating mode). Distribution system must be one of the ducted systems. These include water source and ground source heat pumps. [Efficiency Metric: COP]~~
~~GasHeatPump~~	~~Heating side of a gas-fired heat pump. Two efficiencies, a COP for the gas portion and a COP for the electric portion. Descriptors expressed as COPheatinggas/COPheatingelectric.~~
~~RoomHeatPump~~	~~Heating side of non-central room air conditioning systems. These include small ductless split system heat pump units and packaged terminal (commonly called "through-the-wall") units. Distribution system must be DuctIndoor. [Efficiency Metric: COP]~~
~~Electric~~	~~All electric heating systems other than space conditioning heat pumps. Included are electric resistance heaters, electric boilers and storage water heat pumps (air-water) (StoHP). Distribution system can be Radiant, Baseboard or any of the ducted systems. [Efficiency Metric: HSPF]~~
~~CombHydro~~	~~Water heating system can be storage gas (StoGas, LgStoGas), storage electric (StoElec) or heat pump water heaters (StoHP). Distribution systems can be Radiant, Baseboard, or any of the ducted systems and can be used with any of the terminal units (FanCoil, RadiantFlr, Baseboard, and FanConv).~~

~~Table R2-3- HVAC Cooling Equipment Descriptors~~

~~Recommended Descriptor~~	~~Cooling Equipment Reference~~
~~NoCooling~~	~~Entered when the proposed building is not air conditioned or when cooling is optional (to be installed at some future date). Both the Standard Design equivalent building and the proposed design use the same default system (refer to sections 3 and 4). [Efficiency Metric: SEER]~~
~~SplitAirCond~~	~~Split air conditioning systems. Distribution system must be one of the ducted systems. [Efficiency Metric: SEER]~~
~~PkgAirCond~~	~~Central packaged air conditioning systems less than 65,000 Btuh cooling capacity. Distribution system must be one of the ducted systems. [Efficiency Metric: SEER]~~
~~LrgPkgAirCond~~	~~Large packaged air conditioning systems rated at or above 65,000 Btu/hr (cooling capacity). Distribution system must be one of the ducted systems. [Efficiency Metric: EER]~~
~~RoomAirCond~~	~~Non-central room air conditioning cooling systems. These include small ductless split system air conditioning units and packaged terminal (commonly called through-the-wall) air conditioning units. Distribution system must be DuctIndoor. [Efficiency Metric: EER]~~
~~SplitHeatPump~~	~~Cooling side of split heat pump systems. Distribution system must be one of the ducted systems. [Efficiency Metric: SEER<65,000 Btu/hr EER>65,000 Btu/hr]~~
~~PkgHeatPump~~	~~Cooling side of central single-packaged heat pump systems with a cooling capacity less than 65,000 Btuh. Distribution system must be one of the ducted systems. [Efficiency Metric: SEER]~~
~~LrgPkgHeatPump~~	~~Cooling side of large packaged heat pump systems rated at or above 65,000 Btu/hr (cooling capacity). Distribution system must be one of the ducted systems. [Efficiency Metric: EER]~~
~~GasCooling~~	~~Cooling side of a gas-fired heat pump or gas-fired air conditioner. Two efficiencies, a COP for the gas~~

Recommended Descriptor	Cooling Equipment Reference
	portion and a COP for the electric portion. Descriptors expressed as COPcoolingas/COPcoolingelectric.
RoomHeatPump	Cooling side of non-central, room heat pump systems. These include small ductless split system air conditioning units and packaged terminal (commonly called through-the-wall) units. Distribution system must be DuctIndoor. [Efficiency Metric: EER]
EvapDirect	Direct evaporative cooling systems. The SEER is set to 11.0. The default distribution system location is DuctAttic; evaporative cooler duct insulation requirements are the same as those for air conditioner ducts. [Efficiency Metric: SEER]
EvapIndirDirect	Indirect-direct evaporative cooling systems. The SEER is set to 13.0. The default distribution system location is DuctAttic; evaporative cooler duct insulation requirements are the same as those for air conditioner ducts. [Efficiency Metric: SEER]

Minimum Equipment Efficiency/Method (fraction/recommended descriptor): The minimum equipment efficiency needed for compliance along with the applicable method.

Permissible Methods: *AFUE* for furnaces and boilers, *HSPF* for electric heating equipment, *SEER* for heat pumps (cooling) and central air conditioners, and *RE* for water heaters.

If equipment type is *Electric* (other than heat pump), an HSPF of 3.413 should be entered, except for radiant systems which may use an HSPF of 3.55.

Distribution Type and Location (recommended descriptor):

Permissible entries: Listed in Table R2-4

Table R2-4 - HVAC Distribution Type and Location Descriptors

Recommended Descriptors	HVAC Distribution Type and Location Reference
Ducted Systems	Fan-powered, ducted distribution systems that can be used with most heating or cooling systems. When ducted systems are used with furnaces, boilers, or combined hydronic/water heating systems the electricity used by the fan shall be calculated using the methods described later in this manual. R-value must be specified in "Duct R-value" column when a ducted system is specified
DuctsAttic	Ducts located overhead in the unconditioned attic space
DuctsCrawl	Ducts located underfloor in the unconditioned crawl space
DuctsCVC	Ducts located underfloor in a controlled ventilation crawl space
DuctsGarage	Ducts located in an unconditioned garage space.
DuctsBasemt	Ducts located in an unconditioned basement space
DuctsInEx12	Ducts located within the conditioned floor space except for less than 12 lineal feet of duct, typically an HVAC unit in the garage mounted on return box with all other ducts in conditioned space.
DuctsInAll	HVAC unit or systems with all HVAC ducts located within the conditioned floor space, such as gas-fired wall furnaces. This category is used also for systems such as wall furnaces having a fan.
DuctsOutdoor	Ducts located in exposed locations outdoors.
Ductless Systems	Ductless radiant or warm/cold air systems using fan-forced or natural air convection and hydronic systems relying upon circulation pumps and fan-forced or natural air convection, and
Furnaces	Heating equipment such as wall and floor furnaces
Radiant	Radiant electric panels or fanless systems used with a boiler, electric or heat pump water heater, or combined hydronic heating equipment.
Baseboard	Electric baseboards or hydronic baseboard finned-tube natural convection systems

Diagnostic Duct Leakage. If diagnostic duct leakage is specified by the user, the requirement for diagnostic testing shall be reported in the *HERS Required Verification* listings on the CF-1R and C-2R.

Duct R-value(hr ft^2 F/Btu). The installed R-value for duct insulation. The minimum value is 4.2, which is required by the mandatory measures section.

~~When the modeled duct R-value is larger than 4.2, the ACM must report the modeled R-value in this listing and must specify this higher duct R-value in the *Special Features and Modeling Assumptions* listings.~~

~~The modeled R-value cannot be less than 4.2 °F-ft^2-hr/Btu unless an existing building and an existing HVAC distribution system is being modeled as part of an existing plus addition analysis. When duct R-value is less than 4.2 the *Special Features and Modeling Assumptions* listings must indicate that an existing building with an existing HVAC distribution system is being modeled as part of an existing plus addition analysis.HVAC Distribution Systems Misc.~~

~~This listing details important information associated with the use of special HVAC distribution efficiency. The use of any of these features is considered to be special and must also be individually listed on the *HERS Required Verification* listing and individually verified.~~

~~HVAC DISTRIBUTION EFFICIENCY DETAILS *(Example Listing)*~~

~~System Name~~	~~Measured Duct Leakage Target (% of fan cfm / leakage cfm)[1,2]~~	~~Measured Duct Surface Area (ft^2)~~	~~ACCA Manual D Design~~	~~Fan CFM~~
~~Primary~~	~~6%/75.6~~	~~*150*~~	~~*Yes*~~	~~1200~~
~~Bath~~	~~n/a~~	~~*None*~~	~~*No*~~	~~*n/a*~~

~~*Note 1: % of fan cfm is used when the HVAC system is installed at the time of testing and is based on a supply fan capacity of 400 cfm per ton of air conditioning capacity or 21.7 cfm per 1,000 Btus/hour of furnace capacity. When the HVAC is not installed or its capacity is not known the alternate leakage target reported is calculated from 6% of 0.70 cfm per square foot of conditioned floor area for Climate Zones 8 to 15 and 0.50 cfm per square foot of conditioned floor area for the remaining Climate Zones. For an 1800 square foot house in Climate Zone 13 (example shown above) the maximum duct leakage when system capacity is unknown is 75.6 cfm at 25 pascals.*~~

~~*Note 2: The HERS Required Verification listings must include the information specified in Note 1 or the results of those calculations as the method of reporting the appropriate target values for the reduced duct leakage test.*~~

- ~~*System Name (text):* Descriptive name corresponding to a system name defined in the HVAC System listing.~~

- ~~*Measured Duct Leakage Target (% of fan cfm/leakage cfm):* Reduced duct leakage has been modeled to determine seasonal duct efficiency. This credit requires site diagnostic testing by a certified HERS rater supervised by a Commission-approved HERS provider tested in accordance with the procedures in Appendix F. The test results must be less than 6% of fan cfm (derived from installed system capacity when present or from the default assumptions for duct efficiency calculations when the HVAC heating or cooling equipment is not installed) and reported by the HERS rater on a CF-6R form and verified by the local enforcement agency. The target duct leakage must be listed in the *HERS Required Verification* section.~~

- ~~*ACCA Manual D Design (prescribed descriptor: Yes* or *No):* Indicates whether modeling credit for ACCA Manual D duct design has been used. When duct efficiency credit for ACCA Manual D design is claimed, the *HERS Required Verification and the Special Features and Modeling Assumptions* listings must specify that the ACCA Manual D design, layout, and calculations be submitted to the local enforcement agency and a certified HERS rater. The certified HERS rater shall verify the existence of ACCA Manual D layout and calculations and verify that the field installation is consistent with this design.~~

- ~~Measured Duct Surface Area (ft2): This item is applicable only if the entry for ACCA Manual D Design is "Yes" and documents the modeling of reduced duct surface area when a value other than na (not applicable) is reported. The HERS Required Verification listing must indicate that this total value and its subcomponent areas by location must be verified by a certified HERS rater. Moreover reduced duct sizes must still preserve adequate air flow to receive duct efficiency credit. Consequently credit for reduced duct surface area also requires that the HERS rater measure and report HVAC supply fan flow to verify that the~~

~~manufacturer's specified fan flow, consistent with the ACCA manual D design, has not been impaired by reduced duct sizes. The *HERS Required Verification* listing must also indicate this requirement.~~

~~When *Measured Duct Surface Area* is specified the *HERS Verification Listings* must report the supply duct surface area in each of four locations: *Attic/Outside, Crawlspace, Basement, Garage*. This listing must also report whether or not the basement where the ducts are located is conditioned or not~~

~~Water Heating Systems~~

~~This listing provides information on the water heating systems used in the building and is identical to information in the listings of the Computer Method Summary (C-2R) described on Page 2-30. Information concerning auxiliary energy systems, the performance and features of instantaneous gas, large storage gas and indirect gas water heaters, and combined hydronic equipment, if installed, must be included in the *Special Features and Modeling Assumptions listing* if energy credit is taken for such systems. When combined hydronic systems, solar water heating, or wood stove boilers are used, ACM's must augment the Water Heating Systems listing with the inclusion of two additional listings, Water Heating Systems Misc and Water Heater/Boiler Details. The use of these optional capability features must be reported in the *Special Features and Modeling Assumptions* listing with cross references to the Water Heating Systems Misc and Water Heater/Boiler Details listings, and the content of these listings verified as *Special Features*.~~

~~WATER HEATING SYSTEMS~~

~~System Name~~	~~Distribution Type~~	~~Water Heater Name~~	~~Water Heater Type~~	~~Number of Heaters (#)~~	~~Energy Factor~~	~~Tank Volume (gal)~~
~~Upper Floors~~	~~Recirc/Timer~~	~~State100~~	~~StorGas~~	~~3~~	~~.52~~	~~100~~
~~Lower Floors~~	~~Recirc/Timer~~	~~State50~~	~~StorGas~~	~~4~~	~~.62~~	~~50~~
~~Kitchens~~	~~POU~~	~~Loch006~~	~~InstElec~~	~~18~~	~~.98~~	~~na.~~

- ~~*System Name (text):* Unique descriptive name for the water heating system. The name must be linked to entries in the Water Heating Systems Misc and Water Heater System Assignments listings.~~
- ~~*Distribution Type (recommended descriptor):* The type of distribution system used to transport hot water from the water heater to the point of use. Qualifying requirements for these distribution systems are included in Section 6.6 of the *Residential Manual*.~~

  ~~Permissible types: Listed in Table R2-5~~

~~*Table R2-5 - Water Heating Distribution System Descriptors*~~

~~Recommended Descriptor~~	~~Distribution System Reference~~
~~*Std*~~	~~Standard (non-recirculating) potable water heating system with tank storage remote from points of consumptive use~~
~~*POU*~~	~~Point of use potable water heating system, within 8' of fixtures~~
~~*HWR (optional)*~~	~~Standard system with hot water recovery capability~~
~~*Std/PIns*~~	~~Standard system with pipe insulation entire length of piping run~~
~~*ParallelPiping*~~	~~Individual pipes from the water heater to each point of use~~
~~*Recirc*~~	~~Recirculation system, continuous operation w/o control~~
~~*Recirc/Timer*~~	~~Recirculation system, timer controlled~~
~~*Recirc/Dmd*~~	~~Recirculation system, demand controlled~~
~~*Recirc/Temp*~~	~~Recirculation system, temperature controlled~~
~~*Recirc/Timer/Temp*~~	~~Recirculation system, timer + temperature controlled~~
~~*R/D&HWR*~~	~~Combination *Recirc/Dmd + HWR*~~
~~*R/D&PIns*~~	~~Combination *Recirc/Dmd + PIns*~~

- ~~*Water Heater Name (text):* User-defined descriptive name that is specified in the Water Heater Systems and Water Heater/Boiler Details listings.~~
- ~~*Water Heater Type (recommended descriptor)*: The type or category of water heater used. Permissible types: Listed in Table R2-6~~

~~*Table R2-6 - Water Heater Type Descriptors*~~

~~Recommended Descriptor~~	~~Water Heater Reference~~
~~*StoGas*~~	~~gas- or oil-fired storage tank, 2 gal, input < 75,000 Btu/hr~~
~~*LgStoGas*~~	~~gas- or oil-fired storage tank, input > 75,000 Btu/hr~~
~~*StoElec*~~	~~electric resistance-heated storage tank, 2 gal~~
~~*InstGas*~~	~~instantaneous gas-fired, storage < 2 gal~~
~~*InstElec*~~	~~instantaneous electric resistance-heated, storage < 2 gal~~
~~*StoHP*~~	~~electric heat pump with storage tank~~
~~*IndGas*~~	~~storage tank indirectly heated by gas- or oil-fired source~~
~~*Boiler*~~	~~boiler dedicated solely to hydronic space heating~~

~~*Num of Heaters (#)*: The quantity of water heaters of this type in the system.~~

~~*Energy Factor (fraction)*: Applicable to all water heater types subject to National Appliance Energy Conservation Act (NAECA) regulations. Does not apply to *LgStoGas* types; for these types enter "na". If the energy factor is not published, then the water heater is not covered by NAECA and the Water Heater/Boiler Details listing must be completed.~~

~~*Tank volume (gal)*: The listed storage volume of the water heater.~~

~~*Note:* When water heaters with an Energy Factor (EF) of less than 0.58 are installed, the *Special Features and Modeling Assumptions* must list the EF of the water heater and the R-value of externally applied insulation wrap in hr-ft^2-F/Btu as well as the mandatory R-value requirement for external insulation for these water heaters.~~

~~Water Heating Systems Misc.~~

~~This listing details credits associated with the use of solar water heating, wood stove boilers and provides information about combined hydronic pump energy for electric combined hydronic systems. A credit may be taken for either a solar water heating system or a wood stove boiler, but not both.~~

~~WATER HEATING SYSTEMS MISC *(Example Listing)*~~

~~System Name~~	~~Solar Savings Fraction~~	~~Solar System Type~~	~~Wood Stove Boiler?~~	~~Wood Stove Boiler Pump?~~	~~Combined Hydronic Pump Power (Watts)~~
~~Hydronic~~	~~0.00~~	~~*None*~~	~~*Yes*~~	~~*Yes*~~	~~60.00~~
~~DHW~~	~~0.64~~	~~*Passive*~~	~~*No*~~	~~*No*~~	

- ~~*System Name (text):* Descriptive name corresponding to a system name defined in the Water Heating Systems listing.~~
- ~~*Solar Savings Fraction (fraction):* Fraction of the annual heating load for the system met by solar energy, if the water heating system uses a solar system to provide auxiliary heating. The Solar Savings Fraction may be determined using *f-Chart* or other methods approved by the Commission.~~
- ~~*Solar System Type (prescribed descriptor)*: Defines the general type of solar system.~~
- ~~Permissible types: *Active* (pump/blower assisted solar collection/circulation), *Passive* (natural collection/circulation), and *None*~~
- ~~*Wood-Stove Boiler (prescribed descriptor)*: Indicates whether a wood-stove boiler is used.~~
- ~~Permissible entries: *Yes* and *No*.~~
- ~~*Wood-Stove Boiler Pump (prescribed descriptor)*: Indicates whether a wood-stove boiler pump is used to circulate water between the wood stove and the storage tank.~~
- ~~Permissible entries: *Yes* and *No*.~~
- ~~*Combined Hydronic Pump (Watts):* Required only for electric combined hydronic *(Elec/, StoElec/ and InstElec/CombHydro*) systems. Not required for storage gas/oil or heat pump combined hydronic systems (*StoGas/, LgStoGas/, and StoHP/CombHydro*).~~

~~Water Heater/Boiler Details~~

~~This listing provides information about the energy characteristics of the water heaters or boilers used in combined hydronic (*CombHydro*) systems and for non-NAECA water heaters; it will not be applicable to the remainder. In such cases, "na" may be reported.~~

~~WATER HEATER/BOILER DETAILS *(Example Listing)*~~

~~Water Heater Name~~	~~Recovery Efficiency (fraction)~~	~~AFUE (fraction)~~	~~Rated Input (kBtu/hr)~~	~~Standby Loss (fraction)~~	~~Tank R-value (hr-ft^2-/F/Btu)~~	~~Pilot Energy (Btu/hr)~~
~~CombHydState100~~	~~0.78~~	~~na~~	~~60.00~~	~~na~~	~~na~~	~~na~~
~~BigRmWH~~	~~0.79~~	~~na~~	~~75.00~~	~~0.04~~	~~15.30~~	~~na~~

- ~~*Water Heater Name (text):* Name of water heater specified in the Water Heating Systems listing. In the case of a hydronic system heater, the name should be descriptive of this function to distinguish it from any domestic water system heaters.~~
- ~~*Recovery Efficiency (fraction):* Recovery efficiency is the performance measure for instantaneous gas water heaters (*InstGas*), large storage gas/oil water heaters (*LgStoGas*) and indirect gas/oil water heaters~~

(*IndGas*). It is also required for storage gas/oil water heaters (*StoGas*) used in combined hydronic systems (*CombHydro*). The value is taken from the Commission's appliance databases or from the manufacturer's literature. If the value is omitted for NAECA regulated water heaters, then the default value will be assumed. When boilers are used to fire an indirect gas/oil water heater (*IndGas*), the value of the AFUE (see below) is used for the recovery efficiency.

- *AFUE (fraction):* Annual Fuel Utilization Efficiency, the heating efficiency of the water heater based upon approved test methodologies. Values of AFUE are listed in the Commission's directories cited above.
- *Rated Input (kBtu/hr):* The energy input rating from the above directories or from the manufacturer's literature. Entries are required for large storage gas/oil water heaters (*LgStoGas*), indirect gas/oil water heaters (*IndGas*), and when storage gas water heaters (*StoGas/LgStoGas*) or heat pump water heaters (*StoHP*) are used in combined hydronic space heating systems (*CombHydro*).
- *Standby Loss (fraction):* The fractional storage tank energy loss per hour during non-recovery periods (standby) taken from the Commission's directories cited above. Applicable only to large storage gas water heaters (*LgStoGas*).
- *Tank R-value (hr-ft^2-F/Btu):* The total thermal resistance of the internally-insulated tank and any external insulation wrap. Applicable to large storage gas/oil (*LgStoGas*) and indirect gas/oil (*IndGas*) water heaters only.
- *Pilot light (Btu/hr)*: The pilot light energy consumption rating from one of the Commission's directories, cited above. Applicable only to instantaneous gas (*InstGas*) and indirect gas/oil (*IndGas*) water heaters.

Special Features and Modeling Assumptions

This listing must **stand out and command the attention** of anyone reviewing this form to emphasize the importance of verifying these Special Features and the aspects of these features that were modeled to achieve compliance or the energy use results reported. This listing in the Certificate of Compliance must include any special features of the building that affect the building's compliance with the standards and which are not described elsewhere on the Certificate of Compliance. For example, water heating features, or auxiliary credits must be listed under "*Special Features and Modeling Assumptions*" as well as being listed under a special listing of their own. The use of certain non-default values must also be included in this list. These special default values are indicated in the subsequent text. This listing should also include any variations in building features necessary to achieve compliance in multiple orientations.

SPECIAL FEATURES AND MODELING ASSUMPTIONS: (*Example Listing*) Plan Field

This house has Zonal control with multiple zones, interzone surfaces, and interzone ventilation.		
This building uses metal-framed walls that must meet mandatory insulation requirements. In this case R-7 sheathing has been used in addition to the R-13 cavity insulation. For these walls.		
This house has an attached sunspace with interzone surfaces, custom solar heat gain distribution and sunspace thermal mass elements		
This house is modeled with reduced infiltration and/or mechanical ventilation. Consequently the homeowner's manual provided by the builder to the homeowner must include operating instructions for the homeowner on how to use operable windows and/or mechanical ventilation to achieve adequate ventilation.		

HERS Required Verification

Specific features that require diagnostic testing to assure proper installation require field testing and verification by a certified home energy rater (HERS rater) under the supervision of a CEC- approved HERS provider, and must be listed in this section. This listing must **stand out and command the attention** of anyone reviewing

~~this form to emphasize the importance of HERS verification of these features and the aspects of these features that were modeled to achieve compliance or the energy use results reported.~~

~~All items in the *HERS Required Verification* listings must also report that the installer and HERS rater must both provide the appropriate CF-6R documentation for proper installation, testing, and test results for the features that require verification by a HERS rater. The installer must document and sign the CF-6R to verify compliance with design and installation specifications. The HERS rater must document and sign the CF-6R to confirm the use of proper testing procedures and protocol, to report test results, and to report field verification of installation consistent with the design specifications needed to achieve these special compliance efficiency credits.~~

~~The ACM must ask the user if there are vented combustion appliances inside the conditioned space that draw air for combustion from the conditioned space prior to any entry for reduced infiltration or mechanical ventilation. Cooking appliances, refrigerators and domestic clothes dryers are excluded from this requirement. If appliances other than cooking appliances, refrigerators and domestic clothes dryers are present and use conditioned air for combustion, the ACM must instruct the user that reduced infiltration must not be modeled when these devices are part of the Proposed Design and block data entries and ACM modeling of reduced infiltration and mechanical ventilation. When the user indicates that such devices are present or when the user models reduced infiltration or mechanical ventilation, the ACM must report in the *Special Features and Modeling Assumptions* listings that reduced infiltration and/or mechanical ventilation are prohibited from being modeled when vented combustion appliances, not excluded above, are inside conditioned space.~~

~~When a *Proposed Design* is modeled with a reduced target infiltration ($CFM50_H$) that corresponds to an SLA less than 3.0, mechanical ventilation is required and must be reported in the *HERS Required Verification* listings.~~

~~HERS REQUIRED VERIFICATIONS~~	~~Plan~~	~~Field~~
~~This house is using reduced duct leakage to comply and must have diagnostic site testing of duct leakage performed by a certified HERS rater under the supervision of a CEC-approved HERS provider. The results of the diagnostic testing must be reported on a CF-6R form and list the target and measured CFM duct leakage at 25 pascals.~~		
~~This house has tight construction with reduced infiltration and a target blower door test range between 586 and 1250 CFM at 50 pascals. The blower door test must be performed using the ASTM *Standard Test Method for Determining Air Leakage Rate by Fan Pressurization*, ASTM E 779-87 (Reapproved 1992).~~		
~~WARNING: If this house tests below 586 CFM at 50 pascals, the house must either be provided with a ventilation opening that will increase the tested infiltration to at least 586 CFM at 50 pascals (SLA = 1.5) OR mechanical supply ventilation must be provided that can maintain the house at a pressure of at least -5 pascals relative the outside average air pressure while other continuous ventilation fans are operating. Note also that the Commission considers an SLA≤1.5 to be "unusually tight" per the Uniform Mechanical Code.~~		
~~WARNING - Houses modeled with reduced infiltration are prohibited from having vented combustion appliances other than cooking appliances, refrigerators and domestic clothes dryers that use indoor air for combustion inside conditioned space.~~		

~~Compliance Statement and Signatures~~

~~Signature requirements and other details on the compliance statement are included in Section 1.3 of the *Residential Manual*.~~

~~COMPLIANCE STATEMENT~~

~~This certificate of compliance lists the building features and performance specifications needed to comply with the Energy Standards in Title 24, Parts 1 and 6, of the California Code of Regulations, and the Administrative regulations to implement them. This certificate has been signed by the individual with overall design responsibility. When this certificate of compliance is submitted for a single building plan to be built in multiple orientations, any shading feature that is varied is indicated in the *Special Features and Modeling Assumptions* section.~~

~~Designer or Owner (per Business & Professions Code)~~ ~~Name~~ _____ ~~Title/Firm~~ _____ ~~Address~~ _____ ~~City & Zip Code~~ _____ ~~Telephone~~ _____ ~~License Number~~ _____ ~~Signature/Date~~ _____	**~~Documentation Author~~** ~~Name~~ _____ ~~Title/Firm~~ _____ ~~Address~~ _____ ~~City & Zip Code~~ _____ ~~Telephone~~ _____ ~~Signature/Date~~ _____
~~Enforcement Agency~~ ~~Name~~ _____ ~~Title~~ _____ ~~Agency~~ _____ ~~City~~ _____ ~~Telephone~~ _____ ~~Signature/Date~~ _____	

~~2.1~~2.2 Certificate of Compliance –Residential Computer Method ~~Summary~~ (~~C-2R~~CF-1R)

The Certificate of Compliance (report CF-1R) is the principal standard report that shall be produced. The Certificate of Compliance is required by the Administrative Requirements (Title 24, Section 10-103). ~~The second standard report, that must be automatically produced, gives more detail about the program inputs. The Computer Method Summary must always accompany the Certificate of Compliance when the computer performance approach is used.~~

The ~~Computer Method Summary~~ CF-1R (Residential Computer Method) shall include all information provided by the program user. If the standard report does not fully document all user inputs, additional tables or notes shall be added by the program vendor to fully document all user inputs.

Information on the Certificate of Compliance ~~Computer Method Summary~~ is provided below to illustrate the use of all the standard tables.

~~2.1.1~~2.2.1 Report Headings

The following heading shall appear on the first page.

~~The following heading shall appear on the first page of each Computer Method Summary.~~

CERTIFICATE OF COMPLIANCE: Page 1 of 4 ~~C-2R~~
RESIDENTIAL COMPUTER METHOD ~~SUMMARY~~

Project Title Filename:	Date:
Project Address Run Title:	<runcode>
Documentation Author	<initiation time>
Telephone	Building Permit #
Compliance Method	Plan Check / Date
Location/Climate Zone	Field Check/ Date

The Filename, Run Title, Runcode, and Initiation Time need not appear in the header as shown above but shall appear as part of the header information for all pages of the Certificate of Compliance.

The following heading shall appear on subsequent pages.

CERTIFICATE OF COMPLIANCE:
RESIDENTIAL COMPUTER METHOD SUMMARYPERFORMANCE

Page 2 of 4 C-2R

Project Title	Filename:	Date:
	Run Title: <runcode/initiation time>	<runcode/initiation time>

- *Project Title, Date, Project Address, Documentation Author and Telephone, and Climate Zone (text):* Display user inputs for these fields.
- *Filename (filename.ext):* The filename of the input file used to generate the compliance form.
- *Compliance Method (text):* The Alternative Calculation Method program name and version number.
- *<Runcode/Initiation Time> (alphanumeric text):* A unique runcode designation generated automatically by the ACM to identify the specific run. This number and the initiation time changes with each run initiated by the user even though the filename and Run Title may remain the same. The initiation time is the time (including the hour and minute) that the compliance run was initiated by the user.
- *Run Title (text):* Optional user input item. Use for commentary or description of unique characteristics of a particular run.

2.1.22.2.2 Energy Use Summary

This section compares the energy use of the proposed building to the energy budget of the standard design building. All units in this table are TDV (time dependent valuation) energy source (kBtu/ft²ft²-yrear). Energy is shown for space heating, space cooling and hot water. The space heating and cooling energy budgets are determined from the standard design using the custom budget method. The water heating budget is calculated from the custom budget water heating calculation methods described in this documentbudget equation contained in the standards. ACM vendors may add additional columns or rows to this report when appropriate, such as for multi-zone building analyses or breaking out energy use components such as HVAC fans.

TDV ENERGY USE SUMMARY (kBtu/ft^2-yr)

	Standard Design Energy Budget	Proposed Design Energy Use
Space Heating	23.45	21.23
Space Cooling	10.34	8.23
Water Heating	15.90	14.67
Total	49.69	44.13

Additional rows may be added to the table when necessary to accommodate energy uses that are to be included in the analysis but cannot be easily assigned to one of the three principal categories. Examples of possible additional rows might include separating fan energy (typically included with cooling) or recirculating pump energy. For example, an additional row for miscellaneous electrical energy may be required if electric equipment energy use cannot be assigned separately to heating, cooling or hot water.

~~2.1.3~~2.2.3 General Information

This listing in the Certificate of Compliance follows the first page heading and provides basic information about the building. A description of these data elements is given later in this chapter.

~~This section contains general information about the project.~~

GENERAL INFORMATION

HERS Field Verification/Diagnostic Testing Required for Compliance	Yes
Conditioned Floor Area:	1384 ft^2
Average Ceiling Height	10.2 ft.
Building Type:	Single Family ~~Detached~~
Building Front Orientation:	15 ~~0~~deg (North)
Glazing Area as % of Floor Area	14.4%
Average Fenestration U-factor	0.52
Average Fenestration SHGC	0.60
Number of Dwelling Units:	1
Number of Stories:	~~1~~2
Floor Construction Type:	Slab on grade
Number of Conditioned Zones:	2
Total Conditioned Volume:	11072 cf
Conditioned Slab Floor Area:	1384 ft^2
Total Conditioned Floor Area:	1384 ft^2

- *HERS Field Verification/Diagnostic Testing Required For Compliance (yes or no).* At the very beginning of the Certificate of Compliance, this provides a prominent notification when compliance with the performance standards requires HERS Rater field verification or diagnostic testing.
- *Conditioned Floor Area.* The conditioned floor area of all building zones modeled in the computer run.
- *Building Type.* The type of building. Possible types are single-family ~~detached, single-family attached (which includes duplexes and halfplexes)~~ and multi-family ~~(all other attached dwellings including condominiums), addition alone, existing~~.
- *Construction Type.* The type of construction. Possible types are new, existing, addition alone and existing plus addition plus alteration.
- *Building Front Orientation.* The azimuth of the front of the building. This will generally be the side of the building where the front door is located. A typical reported value would be "290° (west)". This would indicate that the front of the building faces north 70° west in surveyors terms. The closest orientation on 45° compass points should be verbally reported in parenthesis, e.g. north, northeast, east, southeast, south, southwest, west or northwest. When compliance is shown for multiple orientations, "all orientations" may be reported. When "all orientations" is reported it shall be included in~~,~~ the *Special Features and Modeling Assumptions* listing ~~shall describe shading features that vary with orientation~~.
- *Number of Dwelling Units.* The total number of dwelling units in the building. This number may be a fraction for cases of addition alone.
- *Number of Stories*. The number of building stories as defined by the ~~*Uniform*~~ *California Building Code*.
- *Floor Construction Type.* The ground floor construction type is one of the factors considered when determining ~~determines~~ the amount of thermal mass in the *Standard Design*~~basis of the custom budget or the standard design building; choices are slab or nonslab. Rules for determining the type of floor construction are discussed in Chapter 3 of this Manual~~.
- *Number of Conditioned Zones.* The number of conditioned zones modeled in the computer run.
- *Total Conditioned Volume.* The total volume of conditioned space within the building.

- *Conditioned Slab Floor Area.* The total area of slab floor (on grade or raised) with conditioned space above and the ground or unconditioned space below. This is used to determine the standard design mass requirement for buildings and the default values of the thermal mass requirements for the proposed design.
- *Total Conditioned Floor Area.* The total floor area of conditioned space in the building to be permitted. This area ~~must~~shall be no less than the *Conditioned Slab Floor Area* specified above. The conditioned nonslab floor area is the difference between the *Total Conditioned Floor Area* and the *Conditioned Slab Floor Area* and is used to determine the thermal mass for the Standard Design, the default value of thermal mass for the Standard Design, and the threshold thermal mass requirement for thermal mass credit in the Proposed Design. The conditioned nonslab floor area includes any nonslab floors, raised or not, and raised slab floors with conditioned space above and below the floor.

2.2.4 Building Zone Information

For most compliance documentation, only one row will be reported in this table. Additional rows are reported when a proposed building is modeled as two zones ~~(zonal control),~~ or when attached, unconditioned spaces are modeled, such as crawl spaces or sunspaces.

BUILDING ZONE INFORMATION

Zone Name	Floor Area ft^2)	Volume (ft^3)	# of Units	Zone Type	Tstat Type	Vent Height (ft)	Vent Area (ft^2)
House	1384	11072	1	Conditioned	Setback	2.0	32

- *Zone Name.* Each zone is given a name that is used to categorize information in the following tables.
- *Floor Area (ft^2).* The floor area of the zone measured to outside wall. The sum of the floor area of all conditioned zones ~~must~~shall equal the conditioned floor area reported under "General Information".
- *Volume (ft^3).* The volume of the zone. The sum of the volume of all conditioned zones ~~must~~shall equal the total volume reported under "General Information".
- *# of Units.* The number of dwelling units in the zone. This number may be a fraction for cases of addition alone or a building in which there are more zones than dwellings.
- *Zone Type.* This description controls some modeling restrictions, such as infiltration, internal and solar gains, etc. Possible conditioned zone entries are Conditioned, Living and Sleeping. Possible unconditioned zone entries include Unconditioned, CVCrawl and Sunspace.
- *Thermostat Type*. Possible conditioned zone entries are Setback, NoSetback, LivingStat, SleepingStat. Additional thermostat types may be allowed for optional modeling capabilities.
- *Vent Height (ft)*. The height difference between the "inlet" ventilation area and the "outlet" ventilation area. The default ventilation height is determined by the number of stories: one story - 2 feet, two or more stories - 8 feet. Different vent heights may be modeled but a non-default vent height is considered a special feature or special modeling assumption that ~~must~~shall be reported in the *Special Features and Modeling Assumptions* listing for special verification. The ventilation height for other windows is the average height difference between the centers of the lower operable window openings and the centers of the upper operable window openings.
- *Vent Area (ft^2)*. This entry is either the default vent area which is assumed by the ACM based on entries in the Fenestration Surfaces table or some other value entered by the user. A Vent Area value greater than 10% of the total rough-out opening area (all windows treated as opening type: “slider”) of all fenestration ~~must~~shall be reported in the *Special Features and Modeling Assumptions* listing for special verification.

~~2.1.6~~2.2.5 Opaque Surfaces

A row shall be reported in this table for each unique opaque surface in the proposed building. Opaque surfaces include walls, roofs, and floors ~~and doors~~. Low-rise residential buildings may have either *Standard* or *Improved* envelope construction quality. This is a feature at the whole building level and not at the surface or construction

type level. Envelope construction quality is reported in the *Field Verification and Diagnostic Testing* section of the CF-1R.

For buildings that are modeled as multiple thermal zones, the opaque surfaces shall be grouped for each zone and indicated with a header "Zone = <ZoneName>". Alternatively, an additional column may be added to the table to indicate the zone the building element is next to. The zone name used in the header should be the same as the name used in the table titled "Building Zone Information".

OPAQUE SURFACES

Surface Type	Area (ft^2)	~~U-Value~~U-factor	Cavity Insul R-value	Sheath. Insul. R-value	~~Total R-value~~	True Azimuth	Tilt	Solar Gains	~~Form 3~~ Appendix IV Reference	Location/ Comments
Zone=Living										
Wall	105.4	0.088	R-13	na	~~11.30~~	0	90	Yes	IV1-A3~~Wall-1~~	Typical
Wall	145.4	0.068	R-11	R-4	~~14.69~~	180	90	Yes	IV1-A3~~Wall-1~~	Typical
Base WallA	100	0.124	na	R-6	~~8.08~~	0	90	No	IV5-E5~~BWall-1~~	0-2 ft below grade
Base Wall B	160	0.124	na	R-6	~~8.08~~	0	90	No	IV5-E5~~BWall-2~~	2-6 ft. below grade
Wall	176.8	0.088	R-13	na	~~11.30~~	270	90	Yes	IV1-A3~~Wall-1~~	Typical
Roof	692	0.031	R-30	na	~~32.48~~	0	0	Yes	IV4-A8~~Roof-1~~	Typical
~~Door~~	~~40~~	~~0.330~~	~~na~~	~~na~~	~~3.03~~	~~0~~	~~90~~	~~Yes~~	~~Door-1~~	~~Typical~~
Zone=Sleep										
Wall	145.4	0.088	R-13	na	~~11.30~~	0	90	Yes	IV1-A3~~Wall-1~~	Typical
Wall	176.8	0.068	R-11	R-4	~~14.69~~	90	90	Yes	IV1-A3~~Wall-1~~	Typical
Wall	145.4	0.088	R-13	na	~~11.30~~	180	90	Yes	IV1-A3~~Wall-1~~	Typical
Roof	692	0.031	R-30	na	~~32.48~~	0	0	Yes	IV4-A8~~Roof-1~~	Typical
Zone=SunSpc										
Wall	72	0.088	R-13	na	~~11.30~~	90	90	Yes	IV1-A3~~Wall-1~~	Sunspace Wall
Wall	90	0.088	R-13	na	~~11.30~~	180	90	Yes	IV1-A3~~Wall-1~~	Sunspace Wall
Wall	72	0.088	R-13	na	~~11.30~~	270	90	Yes	IV1-A3~~Wall-1~~	Sunspace Wall
Roof	135	0.031	R-30	na	~~32.48~~	0	0	Yes	IV4-A8~~Roof-1~~	Sunspace Roof

- *Surface Type.* Valid types are Wall, BaseWallA (0-1.99 ft below grade), BaseWallB (2.0-5.99 ft below grade), BaseWallC (more than 6 ft below grade), Roof/Ceiling, and Floor. If floor is over a crawl space (FlrCrawl), then the ~~U-value~~U-factors used in the custom budget run are based on having a crawl space. Otherwise, they are not. Floor types and areas are also used to determine the default thermal mass for the Proposed Design and the thermal mass for the Standard Design.
- *Area (ft^2).* The area of the surface.
- *Assembly ~~U-value~~U-factor.* The overall ~~U-value~~U-factor of the ~~surface~~ construction assembly selected from ACM Joint Appendix IV. ~~. (U-values are calculated using standard engineering principles as documented in)the *Residential Manual*, Appendix G and Appendix H~~. Note that the U-factors reported in this table are the same whether or not construction quality procedures are followed. There is a credit for construction quality, but it is embedded in the software and not reported as adjustment to the U-factor.
- *Cavity Insul R-val.* The rated R-value of the installed insulation in the cavity between framing members. This does not include framing effects or the R-value of drywall, air films, etc. When insulating sheathing is installed over a framed wall, the "Cavity Insul R-val" should report the insulation in the cavity only. This value is not entered by the user, but is determined when the user selects a standard construction from ACM Joint Appendix IV.
- ~~-~~*Sheath Insul R-val.* The sum total rated R-value of all installed layers of insulating sheathing ~~(R-2 or greater)~~ shall be reported. ~~Multiple sheathing layers must report the total of t~~The sum of the R-values is reported for multiple ~~for all insulating~~ sheathing layers. ~~Gypsum board and exterior siding layers are not included unless they have an R-value greater than 2.0. Cavity insulation is not reported. The R-values of air films are not~~

~~included.~~This value is not entered by the user, but is determined when the user selects a standard construction from ACM Joint Appendix IV.

- ~~*Total R-value.* The total R-value of the opaque surface assembly. This includes framing effects and the R-value of drywall, air films, etc. For below grade walls this value does not include the outside air film nor the R-value of the adjacent soil or gravel. For raised floors over a crawlspace, this value does not include the R-value for the crawlspace.~~
- *True Azimuth.* The actual azimuth of the surface after adjustments for building rotation. There are various ways of describing the orientation or azimuth of surfaces. For ACMs approved by the CEC, a standard convention ~~must~~shall be used. The azimuth is zero degrees for surfaces that face exactly north. From this reference the azimuth is measured in a clockwise direction. East is 90 degrees, south 180 degrees and west 270 degrees.
- *Tilt.* The tilt of the surface. Vertical walls are 90°; flat roofs are 0°; floors are 180°.
- *Solar Gains.* A yes/no response is given to indicate if a surface receives solar gains. Surfaces that do not receive solar gains may include floors over crawl spaces and walls adjacent to garages. Only a yes/no response is required since the surface absorptance is a fixed input.
- ~~*Form 3*~~ *ACM Joint Appendix IV Reference.* A reference to the construction assembly selected from ACM Joint Appendix IV.~~attached Form 3's that may accompany the compliance documentation~~. This name may also be referenced from the thermal mass table to indicate an exterior mass wall.
- *Location/Comments.* User provided text describing where the surface is located or other relevant information.

~~2.1.7~~2.2.6 Perimeter Losses

This table provides details about components of the building envelope that are modeled as perimeter losses. Typical perimeter losses are slab edge losses, retaining wall losses, and losses from the base of controlled ventilation crawl spaces. A row is provided in the table for each unique perimeter element. Note that a single F-~~2~~ factor is reported for slab edge losses for slab floor interiors that are carpeted or exposed based on a fixed assumption of 20% of the edge adjacent to exposed slab. This assumption ~~must~~shall be used and separate ~~F2~~F-factor values for different interior covering conditions may not be reported or modeled by an approved ACM.

For buildings that are modeled as multiple thermal zones, the items shall be grouped for each zone and indicated with a header "Zone = <ZoneName>". Alternatively, an additional column may be added to the table to indicate the zone the building element is next to. The zone name used in the header should be the same as the name used in the table titled "Building Zone Information."

PERIMETER LOSSES

Perimeter Type	Length (ft)	F-~~2~~ Factor	Insul R-val	Insul Depth (in)	Location/Comments
Zone=Living					
SlabEdge	76	~~0.75~~0.70	R-~~3~~5	~~8~~24	Exposed edge
Zone=Sleep					
SlabEdge	76	0.~~75~~70	R-~~3~~5	~~8~~24	Exposed edge
Zone=SunSpc					
SlabEdge	65	0.~~90~~73	R-0	na	Exposed edge

- *Perimeter Type.* The perimeter type. Possible types are slab edge, crawl space perimeter, etc. Names may be abbreviated.
- *Length (ft).* The perimeter length in feet.
- *F-~~2~~ Factor.* The perimeter heat loss factor (see Section 3.2.6~~4.22~~).

- *Insul R-Val.* The R-value of the installed insulation. "R-0" or "None" should be reported when no insulation is installed.
- *Insul Depth (in).* The depth that the insulation extends below the top surface of the slab in inches.
- *Location/Comments.* User provided information on the location of the perimeter element or other relevant information.

~~2.1.8~~2.2.7 Fenestration ~~Surfaces~~and Doors

The term "fenestration" is used to refer to an assembly of components consisting of frame and glass or glazing materials. According to the standards (Section 101), fenestration includes "any transparent or translucent material plus frame, mullions, and dividers, in the envelope of a building." Fenestration surfaces include windows, skylights and glazing in doors or other transparent or translucent surfaces. Opaque doors are also included in this section since they represent "openings" in the gross wall or roof, just like window or skylights. This listing reports information about each fenestration product or door. One row is to be included in the listing for each unique condition. When compliance is for all orientations, the building facade orientations shall be reported for the case with the "front" facing north or the orientation shall be reported as "*Any*".

This listing ~~must~~shall include information about each fenestration surface in the proposed building. Fenestration surfaces include windows, skylights and glazing in doors or other transparent or translucent surfaces. One row is included in the listing for each unique fenestration condition. ACMs ~~must~~shall restrict users to select from a limited list of exterior shading devices and their associated solar heat gain coefficients (SHGCs), namely, those devices and SHGCs listed in for exterior shading devices. ACMs shall not allow users to enter custom shading devices nor account for differences in alternative color, density, or light transmission characteristics. ACMs are required to calculate, but not report, $SHGC_{open}$ and $SHGC_{closed}$ using 2001 Standards calculation procedures and assumptions.

For buildings that are modeled as multiple thermal zones, the fenestration surfaces shall be grouped for each zone and indicated with a header "Zone = <Zone Name>". Alternatively, an additional column may be added to the table to indicate the zone the building element is next to. The zone name used in the header should be the same as the name used in the table titled "Building Zone Information"

FENESTRATION ~~SURFACES~~AND DOORS

Fenestration #/Type/Orien	Area (ft^2)	U-factor	Fenes.SHGC	True Az	Tilt	Exterior Shade Type /~~SHGC~~SHGC	Location / Comments
Zone=Living							
1 Wdw Front(N)	70.4	0.65	0.88	0	90		
2 Wdw Left(E)	70.4	0.65	0.88	90	90	WveScrn/ 0.39	
3 Front Door	20						
4.Garage Door	20						
Zone=Sleeping							
~~3~~ 4 Wdw Back(S)	70.4	0.65	0.88	180	90		
~~4~~ 5 Wdw Right(W)	70.4	0.65	0.88	270	90	LvrScrn/ 0.36	

- *Fenestration #/Type/Orien.* The # is a unique number for each different fenestration surface entry. The type is Wdw (window) Dr (door) or Sky (skylight). The *Orien* (orientation) is the side of the building (front, left, right or back) followed by the nearest 45° compass point in parenthesis (N, NE, etc.). When compliance is for all orientations, only the side of the building may be reported (front, right, etc.)
- *Area (ft^2).* The area of the surface in square feet. This should generally be the rough frame opening.
- ~~*U-value*~~*U-factor*. The rated ~~U-value~~U-factor of the fenestration product, in Btu/h-ft^2-°F.
- *True Azimuth.* The true (or actual) azimuth of the glazed surface after adjustment for building rotation. The convention for describing the azimuth is standardized as discussed above under opaque surfaces.

- *Tilt.* The tilt of the glazed surface. Most windows will have a 90° tilt. Skylights typically have a tilt equal to the corresponding roof surface.
- *Fenestration SHGC:* The solar heat gain coefficient of the fenestration.
- *Exterior Shade Type/SHGC*. The type of exterior shading device and its solar heat gain coefficient from Table R3-7~~Table 2-1~~. "*Standard/0.76*" or " " ~~must~~shall appear when no special exterior shading device is included in the building plans. *Standard (partial bugscreen)* shading shall automatically be given for all window area without other forms of exterior shading devices. This shading assumes that a portion of the window area is covered by bugscreens. Other valid exterior shades include louvered screens (*LvrScrn*), woven sunscreen (*WvnScrn*), and Low Sun Angle Sunscreen (*LSASnScrn*). When used for compliance purposes, ACMs shall not allow or accept input for user-defined exterior shades.

~~2.1.9~~2.2.8 Solar Gain Targeting

This table is only used for special cases, such as sunspaces (an optional modeling capability, and hence a Special Feature). Solar gains that enter conditioned spaces ~~must~~shall be targeted to the air, but when glazing surfaces enclose unconditioned spaces, such as sunspaces, the user is allowed to target all but 25% of the solar gains from these surfaces to mass elements located within the unconditioned space. More than one row of targeting data may be included for each glazed surface. Unassigned solar gain is targeted to the air in the unconditioned space. At least 25% of the solar gain from any sunspace fenestration surface ~~must~~shall be targeted to high surface area lightweight mass or the air. At most 60% of the solar gain may be targeted to the slab floor of a sunspace, especially in the summer. An ACM ~~must~~shall automatically enforce these limits and inform the user of any attempt to exceed these limits.

Note that the use of any optional capability such as sunspace modeling ~~must~~shall be reported in the *Special Features and Modeling Assumptions* listings. In addition, solar gain targeting ~~must~~shall be separately reported in the *Special Features and Modeling Assumptions* listings so that the local enforcement agency can verify that these inputs are reasonable.

SOLAR GAIN TARGETING

Fenestration #/Type/Orien	Mass Name	Winter Fraction	Summer Fraction
1 Wdw Front(N)	SSSlb	0.30	0.30

- *Fenestration #/Type/Orien.* The fenestration surface which transmits solar gain to an interior unconditioned space thermal mass. This corresponds to an item in the fenestration surfaces table.
- *Mass Name.* The name of the mass element to which solar gains are directed. The mass name corresponds to an item in the thermal mass table.
- *Winter Fraction.* The fraction of solar gains targeted from the glazing surface to the absorbing thermal mass when the building is in a heating mode.
- *Summer Fraction.* The fraction of solar gains targeted from the glazing surface to the absorbing thermal mass when the building is in a cooling mode.

~~2.1.10~~2.2.9 Overhangs

Overhangs are a minimum ACM capability and are described in this table.

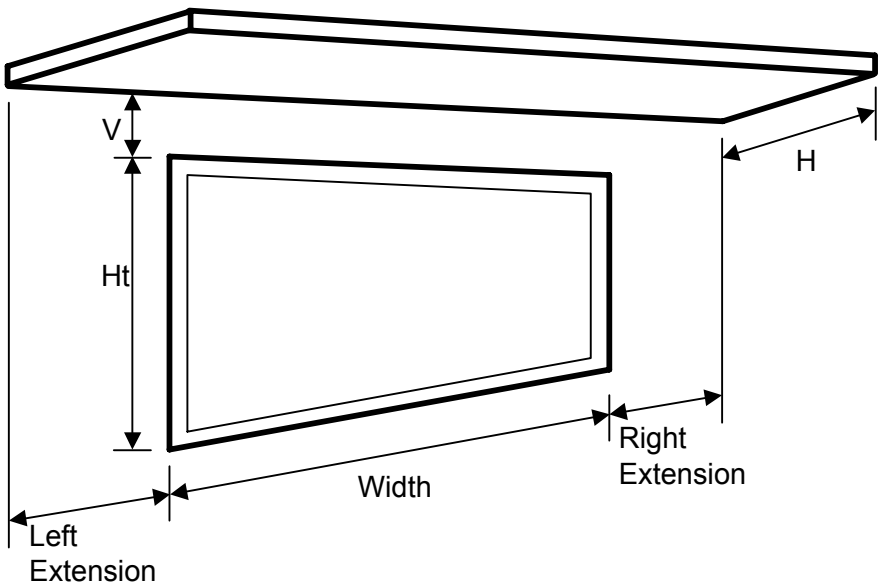

Figure R2-1 – Overhang Dimensions

OVERHANGS

Fenestration			Overhang			
#/Type/Orien	Wdth	Ht	Lngth "H"	Ht "V"	Left Extension	Right Extension
3 Wdw Back(S)	4.0	5.0	2.6	1.5	6.0	6.0

- *Fenestration #/Type/Orien.* This corresponds to an item in the fenestration surfaces list.
- *Fenestration Wdth.* The width of the rough-out frame opening for the fenestration (in feet) measured from the edge of the opening on one side to the edge of the opening on the other side.
- *Fenestration Ht.* The height of the rough-out frame opening for the fenestration (in feet) measured from the bottom of the opening or frame to the top of the opening or frame.
- *Overhang Lngth "H".* The horizontal distance in feet from the surface of the glazing to the outside edge of the overhang.
- *Overhang Ht "V".* The vertical distance (in feet) from the top of the glazing frame to the bottom edge of the overhang at the distance “H” from the glazing surface. See Figure R2-1.
- *Overhang Left Extension.* The distance in feet from the left edge of the glazing frame to the left edge of the overhang. "Left" and "right" are established from an exterior view of the window.
- *Overhang Right Extension.* The distance in feet from the right edge of the glazing frame to the right edge of the overhang.

~~2.1.112.2.10~~ Side Fins

~~Side fins are an optional capability. If an ACM does not provide this option, then this table is not used.~~

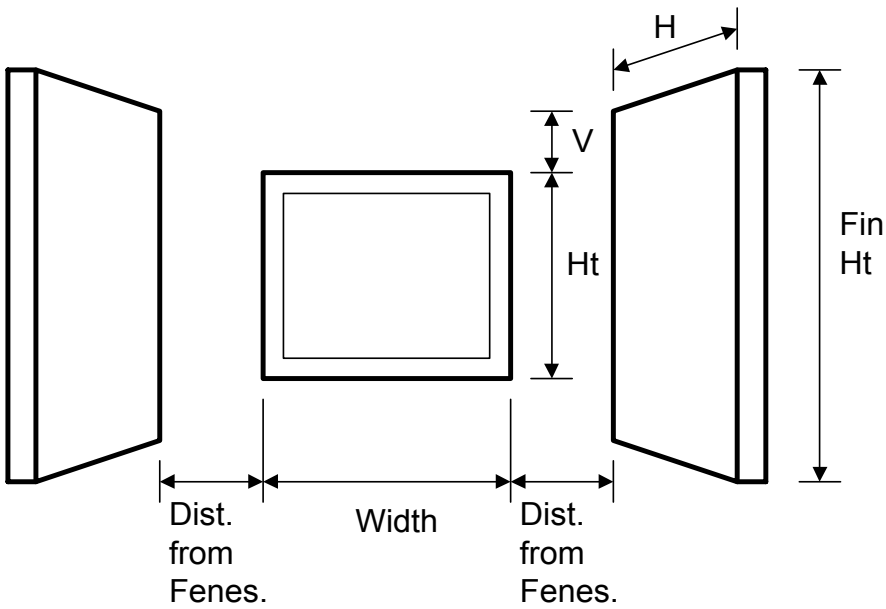

Figure R2-2 – Side Fin Dimensions

SIDE FINS

Fenestration			Left Fin				Right Fin			
#/Type/Orien	Wdth	Ht	Dist from fenes	Lngth "H"	Ht "V"	Fin Ht	Dist from fenes	Lngth "H"	Ht "V"	Fin Ht
3 Wdw Back(S)	4.0	5.0	6.0	2.0	6.0	8.0	6.0	2.0	6.0	8.0

- *Fenestration #/Type/Orien.* This ~~must~~shall correspond to an item in the fenestration surfaces list.
- *Fenestration Wdth.* The width of the rough-out opening for the fenestration (in feet) measured from the edge of the opening or frame on one side to the edge of the opening or frame on the other side.
- *Fenestration Ht.* The height of the rough-out opening for the fenestration (in feet) measured from the bottom of the opening or frame to the top of the opening or frame.
- *Left Fin Dist from fenes*. The distance in feet from the nearest glazing frame edge to the fin. "Left" and "right" are established from an exterior view of the window.
- *Left Fin Lngth "H".* The horizontal distance in feet from the surface of the glazing to the outside edge of the fin.
- *Left Fin Ht "V"*. The vertical distance (in feet) from the top of the glazing frame to the top edge of the fin.
- *Left Fin, Fin Ht.* The height of the fin, in feet.
- *Right Fin.* Similar to Left Fin items.

~~2.1.1~~22.2.11 Inter-Zone Surfaces

This listing is used only for proposed designs modeled as multiple thermal zones which is considered an exceptional condition and ~~must~~shall also be listed in the *Special Features and Modeling Assumptions* listings for the CF-1R~~ and the C-2R~~. The *Special Features and Modeling Assumptions* listing ~~must~~shall direct plan and field checkers to the listings for *Interzone Surfaces* and *Interzone Ventilation*. The *Interzone Surfaces* listing describes the characteristics of the surfaces that separate the zones.

For buildings that are modeled with more than two thermal zones, the inter-zone surfaces shall be grouped so that it is clear which zones are separated by the surfaces. The groupings shall be labeled "Between

ZoneName1 and ZoneName2" or some similar convention. This information may also be provided through additional columns in the table.

INTER-ZONE SURFACES

Surface Type	Area (ft^2)	~~U-value~~U-factor	Cavity Insul R-val	Sheath Insul R-valu	Form 3 Reference	Location/Comments
Between Living and Sunspc						
Wall	100	0.09	R-11	na	Wall-2	Insulated partition
Glass	30	1.10	SglGls	na		Sliding glass door
Between Sleeping and Sunspc						
Wall	220	0.09	R-11	R-4	Wall-2	Insulated partition
Glass	10	1.10	SglGls	na		Window
Between Living and Sleeping						
Wall	206	0.293	R-0	na	Wall-3	Gypsum partitions
Door	40	0.33	R-0	na		Hollow core doors

- *Surface Type.* The type of surface separating the zones. Possible types are window, wall, etc.
- *Area (ft^2).* The area of the surface in square feet that separates the zones.
- *U-val.* The ~~U-value~~U-factor of the surface.
- *Cavity Insul R-val.* The R-value of insulation installed in cavity of the framed construction assembly. This does not account for framing effects, drywall, air films, etc.
- *Sheath Insul R-val.* The total R-value of all insulation layers (layers R-2 or greater) not penetrated by framing. Excludes low R-value layers such as sheetrock, building paper, and air films.
- ~~*Form 3*~~*ACM Joint Appendix IV Reference*. A reference to a selection from ACM Joint Appendix IV ~~attached Form 3's that may accompany the compliance documentation~~.
- *Location/Comments.* User provided information on the location of the inter-zone surface or other relevant information.

~~2.1.13~~2.2.12 Inter-Zone Ventilation

This listing is used for proposed designs that are modeled as multiple building zones. The modeling of multiple building zones is considered an exceptional condition that ~~must~~shall be reported in the *Special Features* and *Modeling Assumptions* listings, which ~~must~~shall also refer to the information in this listing when this listing is generated by the ACM to echo user inputs for Inter-Zone Ventilation. If inter-zone ventilation is modeled, it ~~must~~shall be reported in this listing. It describes natural and/or mechanical ventilation systems that separate the zones.

For buildings that are modeled with more than two thermal zones, the inter-zone ventilation items shall be grouped so that it is clear which zones are linked by the items. The groupings shall be labeled "Between ZoneName1 and ZoneName2" or some similar convention. This information may also be provided through additional columns in the table.

INTER-ZONE VENTILATION

Vent Type	Inlet Area	Outlet Area	Height Diff.	Fan Watts	Fan Flow (cfm)	Location/ Comments
Between Living and Sunspc						
Natural	20	20	3	na	na	

- *Vent Type.* Possible types are natural and fan.
- *Inlet Area.* The area of the air inlet in square feet. This is used only when vent type is "natural".

- *Outlet Area.* The area of the air outlet in square feet. This is used only when vent type is "natural".
- *Height Diff.* The elevation difference between the inlet and the outlet in feet. This is used only when vent type is "natural". Default is two feet.
- *Fan Watts.* The fan power rating in watts. This is used only for sunspaces and only then when vent type is "fan". Fan energy may be reported as a separate line item or added to the TDV~~source~~ energy for heating.
- *Fan Flow (cfm).* The cubic feet per minute of air flow provided when the fan is operating. This is used only for sunspaces and then only when vent type is "fan".
- *Location/Comments*. User provided text describing where the item is located or other relevant information.

2.2.13 Infiltration/Ventilation

This listing is only produced when the applicant has used reduced infiltration measures (and mechanical ventilation when necessary) to improve the overall energy efficiency of the Proposed Design while maintaining adequate air quality. Reduced infiltration credit may be taken for duct sealing and installation of an air retarder without a blower door test. Otherwise, the use of reduced infiltration requires diagnostic blowerdoor testing by a installer and a certified HERS rater to verify the modeled reduced leakage area and to ensure minimum infiltration/ventilation rates are achieved. Relevant information regarding infiltration and ventilation shall be reported in the *Field Verification and Diagnostic Testing* listings on the CF-1R. The listings shall indicate that diagnostic blower door testing shall be performed as specified in ASTM E 779-99, *Standard Test Method for Determining Air Leakage Rate by Fan Pressurization*. This listings shall also report the target $CFM50_H$ required for the blower door test to achieve the modeled SLA and the minimum $CFM50_H$ (corresponding to an SLA of 1.5) allowed to avoid backdraft problems. This minimum allowed value is considered by the Commission to be "unusually tight" in the requirements of the California Mechanical Code.

When the target $CFM50_H$ of the *Proposed Design* is below the value corresponding to an SLA of 3.0, mechanical ventilation with a minimum capacity of 0.047 CFM per square foot of conditioned floor area is required. This requirement for mechanical ventilation and minimum capacity shall be reported in the *Field Verification and Diagnostic Testing* listings of the CF-1R. Also, the *Field Verification and Diagnostic Testing* listings shall state that when the measured $CFM50_H$ is less than the minimum allowed value, corrective action shall be taken to either intentionally increase the infiltration or provide for mechanical supply ventilation adequate to maintain the dwelling unit at a pressure greater than -5 pascals relative to the outside average air pressure with other continuous ventilation fans operating.

When mechanical ventilation is part of the Proposed Design the exhaust and supply fan wattages shall be reported in this listing and the *Field Verification and Diagnostic Testing* listings. Whenever mechanical ventilation is modeled by the user or required by modeling an SLA of 3.0 or less, the mechanical ventilation capacity selected by the user shall be greater than or equal to 0.047 cfm per square foot of conditioned floor area to be modeled by an approved ACM. If the user enters a volumetric capacity that is less than 0.047 cfm/ft^2, the ACM shall indicate an input error to the user and block compliance output.

When reduced infiltration or mechanical ventilation is modeled, the *Special Features and Modeling Assumptions* listings shall include a statement that the homeowner's manual provided by the builder to the homeowner shall include instructions that describe how to use the operable windows or mechanical ventilation to provide for proper ventilation.

INFILTRATION/VENTILATION DETAILS *(Example Listing)*

Blower Door Leakage Target ($CFM50_H$/SLA)	Blower Door Leakage Minimum ($CFM50_H$/SLA)	Vent. Fan CFM (Supply/Exhaust)	Mechanical Vent Fans (Watts) [Supply/Exhaust]
1250/2.9	586/1.5	200/300	*50/75*

- *Blower Door Leakage Target ($CFM50_H$/SLA):* The measured blower door leakage in cfm at 50 pascals of pressurization and its equivalent Specific Leakage Area (SLA) value.
- *Blower Door Leakage Minimum ($CFM50_H$/SLA):* The limit for the blower door leakage test to avoid backdrafting, which corresponds to a Specific Leakage Area (SLA) of 1.5, considered to be "unusually

tight" for California Mechanical Code compliance. The ACM shall report in the *Field Verification and Diagnostic Testing* listings that the Commission considers this minimum CFM and the corresponding SLA of 1.5 or less to be "unusually tight" per the Uniform Mechanical Code. In the sample listing given above a 1600 square foot house and the SLA lower limit of 1.5 is used to determine the *Blower Door Leakage Minimum* shown.

- *Vent. (Ventilation) Fans (CFM):[Supply/Exhaust]* The total volumetric capacity of supply fans and exhaust fans listed separately, separated by a slash (or reported in separate columns). The balanced portion of mechanical ventilation is the smaller of these two numbers while the unbalanced portion is the difference between these two numbers. These values are reported in cubic feet per minute.
- *Mechanical Vent. (Ventilation) Fans (Watts) [Supply/Exhaust]:* The total power consumption of the supply ventilation fans and the total power consumption of the exhaust ventilation fans in watts.

Use of an air retarding wrap shall be reported in the Special Features and Diagnostic Testing listings.

2.2.14 Slab Surfaces

This table shall be listed when the building has slab surfaces but does not qualify as a high mass design (see Thermal Mass in Chapters 3 and 4). If the building qualifies as a high mass design, this listing is omitted and the listing for high mass designs is included.

SLAB SURFACES

Mass Name	Area (ft^2)
Zone=Living	
Standard Slab	1600

- *Mass Name.* The name of the mass element.
- *Area (ft^2).* The area of the mass in square feet.

~~2.1.15~~2.2.15 Thermal Mass for High Mass Design

This ~~listing~~ table can only appear if and when the Proposed Design qualifies as a ~~'s thermal mass exceeds the required~~ high mass ~~threshold~~building (see Chapter 3). ~~Exceeding this mass threshold and modeling this mass in the Proposed Design is also~~ High mass buildings are considered to be an exceptional condition and ~~must~~shall be reported in the *Special Features and Modeling Assumptions* listings on the CF-1R~~ and the C-2R~~. The table specified below ~~his listing shall~~ provides detail about the thermal mass elements in qualifying high mass ~~the~~ building. One row is provided in the table for each mass element.

Thermal mass elements may be located within a single zone, they may separate zones or they may be located on an exterior wall. Mass elements in each of these categories shall be grouped and labeled accordingly. Additional columns may be added to the table to provide this information.

THERMAL MASS FOR HIGH MASS DESIGN

Mass Name	Area (ft^2)	Thickness (inches)	Volumetric Heat Capacity (Btu/ft^3-°F)	Conduc-tivity (Btu-in)/(hr-ft^2-°F)	Form 3 Reference	Inside Surface R-value (hr-ft^2-°F)/Btu	Location/Comments
Zone=Living							
ExpSlb-L	273	3.5	28	.98	na	0	Exposed in living
CarSlb-L	419	3.5	28	.98	na	2	Carpeted in living
Zone=Sleep							
ExpSlb-S	273	3.5	28	.98	na	0	Exposed in sleeping
CarSlb-S	419	3.5	28	.98	na	2	Carpeted in sleeping
Zone=SunSpc							
SSSlb	450	3.5	28	.98	na	0	Sunspace slab
Between Sunspc and Living							
SSWall	100	8.0	28	.98	na	0	Masonry wall

- *Mass Name.* The name of the mass element. This name may be referenced from the optional solar gains targeting section of the fenestration surfaces table.
- *Area (~~ft²~~ft²).* The area of the mass in square feet.
- *Thickness.* The mass thickness in inches.
- *Heat Capacity.* The volumetric heat capacity of the mass material in Btu/°F-ft³~~F-cf~~.
- *Conductivity.* The conductivity of the mass material in Btu-in/h~~r-ft²~~ft² -°F.
- *ACM Joint Appendix IV ~~Form 3~~ Reference.* A reference to a lookup from ACM Joint Appendix IV.~~a wall Form 3. This may be used when a mass element is part of an exterior wall to describe an exterior mass wall or the link between a mass material and an opaque wall surface. The mass area should be the same as the sum of the wall surface areas that reference it~~.
- *Inside Surface R-value.* The thermal resistance of any material (such as carpet or tapestry) that may exist on the inside surface of the thermal mass excluding air films. For instance, if a mass element is carpeted, a surface R-value of 2 is the fixed input. For mass elements that separate thermal zones, the surface R-value may be reported separately for each side of the mass.
- *Location/Comments.* User provided information on the location of the mass element or other relevant information.

~~2.1.16~~2.2.16 HVAC Systems

Information is provided on the type of heating and cooling systems proposed for each zone of the building. Data in the table is organized to accommodate any type of heating or cooling system so some of the information is not applicable for all system types. When the information is not applicable, "na" is reported. Data in this table should be organized first by thermal zones and then by heating and cooling systems. Note that the thermostat type is reported under "Building Zone Information" described above.

For buildings that are modeled as multiple thermal zones, the items shall be grouped for each zone and indicated with a header "Zone = <ZoneName>". The zone name used in the header should be the same as the name used in the table titled "Building Zone Information"

HVAC SYSTEMS

Equipment Type	Minimum Equipment Efficiency (or Water Heating System Name)	Verified Refrigerant Charge~~ and Airflow~~	~~DistributionType and Location~~Verified Adequate Airflow	~~Duct R-value~~Verified Fan Watt Draw	Verified Cooling Capacity
Zone=Living					
Furnace	0.78 AFUE	N/A	~~DuctsCrawl~~N/A	~~4.2~~N/A	N/A
AirCond-Split	10.0 SEER/9.3 EER	Yes	~~DuctsCrawl~~Yes	~~4.2~~240	Yes
Zone=Sleep					
CombHydro	Upper Floors	N/A	~~Baseboard~~N/A	~~na.~~N/A	N/A
AirCond-Split	10.0 SEER	No	~~DuctsAttic~~No	~~4.2~~No	No

- *Equipment Type*. The type of heating or cooling equipment. This is specified separate from the distribution type. Required heating equipment and cooling equipment entries are listed in Table R2-1~~Table 2-2~~ and Table R2-2~~Table 2-3~~. When the proposed house is not air conditioned, the entry should be NoCooling. If more than one type of equipment is specified, they may be listed on subsequent rows. If Gas Absorption equipment is specified, it shall be reported in the *Special Features and Modeling Assumptions* listings on the CF-1R forms printed by the ACM.

- *Minimum Equipment Efficiency.* The minimum equipment efficiency needed for compliance. The applicable efficiency units should also be reported, for instance AFUE for furnaces and boilers, HSPF for electric heating equipment, and SEER for heat pumps (cooling) and central air conditioners. In the case of combined hydronic heating, the name of the water heating system ~~should~~ shall be identified. If the equipment type is Electric (other than heat pump), an HSPF of 3.413 should be entered, except for radiant systems which use a maximum HSPF of 3.55. EER indicates that the energy efficiency ratio at ARI test conditions has been specified and will be verified according to the procedure in ACM Appendix RI - Procedures for Verifying the Presence of a Thermostatic Expansion Valve or High Energy Efficiency Ratio Equipment, and shall also be reported in the *Field Verification and Diagnostic Testing* listings.

- *Verified Refrigerant Charge~~ and Airflow~~.* The choices are 'Yes' or 'No' where 'Yes' means that either refrigerant charge ~~and airflow are~~ is verified or a TXV is installed and verified. Refrigerant charge credit is applicable to split system air conditioners and heat pumps only. The two equipment types that can comply by verifying refrigerant charge are SplitAirCond, and SplitHeatPump. ~~See Section 2.1 for system types for which this credit can be claimed.~~

- *Verified Adequate Airflow.* Yes indicates that the air flow will be tested and verified according to the procedure in ACM Appendix RE - Forced Air System Fan Flow and Air Handler Fan Watt Draw and shall also be reported in the *Field Verification and Diagnostic Testing* listings. No indicates that the default air flow is used.~~The default distribution type and location is a ducted, central system with 100% of the ducts in the attic. If a duct design is specified with duct locations on the plans but without specific duct surface areas (sizes and lengths) specified, the *Special Features and Modeling Assumptions* listing shall specify the default duct locations that are specified in Section 3.7~~8.4. ~~To use DuctsCrawl or DuctsBsmt, all supply registers must be in the floor and the *Special Features and Modeling Assumptions* listings must indicate that all supply registers are in the floor.~~

- *Verified Fan Energy*. A number such as 240 indicates the user specified air handler fan watt draw that will be tested and verified according to the procedure in ACM Appendix RE - Forced Air System Fan Flow and Air Handler Fan Watt Draw and shall also be reported in the *Field Verification and Diagnostic Testing* listings No indicates that the default fan watt draw is used.

~~*Duct R-value*. The installed R-value for duct insulation. The minimum duct insulation is 4.2 which is required by the mandatory measures section.~~

- *Verified Maximum Cooling Capacity*. Yes indicates that the proposed design will have an air conditioner sized according to the ACM calculations in ACM Appendix RF – HVAC Sizing[gwp20] and this shall also be reported in the *Field Verification and Diagnostic Testing* listings. Systems may claim this credit only if they also have claimed credit for the combination of verified adequate airflow, sealed and tested new duct

systems, and proper refrigerant charge (or alternatively a TXV). No indicates that no sizing credit is being taken.

Table R2-1 – HVAC Heating Equipment Descriptors

Recommended Descriptor	Heating Equipment Reference
CntrlFurnace	Gas- or oil-fired central furnaces, propane furnaces or heating equipment considered equivalent to a gas-fired central furnace, such as wood stoves that qualify for the wood heat exceptional method. Gas fan-type central furnaces have a minimum AFUE=78%. Distribution can be gravity flow or use any of the ducted systems. [Efficiency Metric: AFUE]
Heater	Non-central gas- or oil-fired space heaters, such as wall heaters floor heaters or unit heater. Equipment has varying efficiency requirements. Distribution is ductless and may be gravity flow or fan-forced.. Can refer to floor furnaces and wall heaters within the description field for CntrlFurnaces, [Efficiency Metric: AFE]
Boiler	Gas or oil boilers. Distribution systems can be Radiant, Baseboard or any of the ducted systems. Boiler may be specified for dedicated hydronic systems. Systems in which the boiler provides space heating and fires an indirect gas water heater (IndGas) may be listed as Boiler/CombHydro Boiler and shall be listed under "Equipment Type" in the HVAC Systems listing. [Efficiency Metric: AFUE]
SplitHeatPump	Heating side of central split system heat pump heating systems. Distribution system shall be one of the ducted systems. [Efficiency Metric: HSPF]
PkgHeatPump	Heating side of central packaged heat pump systems. Central packaged heat pumps are heat pumps in which the blower, coils and compressor are contained in a single package, powered by single phase electric current, air cooled, rated below 65,000 Btuh. Distribution system shall be one of the ducted systems. [Efficiency Metric: HSPF]
LrgPkgHeatPump	Heating side of large packaged units rated at or above 65,000 Btu/hr (heating mode). Distribution system shall be one of the ducted systems. These include water source and ground source heat pumps. [Efficiency Metric: COP]
~~GasHeatPump~~	~~Heating side of a gas fired heat pump. Two efficiencies, a COP for the gas portion and a COP for the electric portion. Descriptors expressed as COPheatinggas/COPheatingelectric.~~
RoomHeatPump	Heating side of non-central room air conditioning systems. These include small ductless split system heat pump units and packaged terminal (commonly called "through-the-wall") units. Distribution system shall be DuctIndoor. [Efficiency Metric: COP]
Electric	All electric heating systems other than space conditioning heat pumps. Included are electric resistance heaters, electric boilers and storage water heat pumps (air-water) (StoHP). Distribution system can be Radiant, Baseboard or any of the ducted systems. [Efficiency Metric: HSPF]
CombHydro	Water heating system can be storage gas (StoGas, LgStoGas), storage electric (StoElec) or heat pump water heaters (StoHP). Distribution systems can be Radiant, Baseboard, or any of the ducted systems and can be used with any of the terminal units (FanCoil, RadiantFlr, Baseboard, and FanConv).

Table R2-2 – HVAC Cooling Equipment Descriptors

Recommended Descriptor	Cooling Equipment Reference
NoCooling	Entered when the proposed building is not air conditioned or when cooling is optional (to be installed at some future date). Both the Standard Design equivalent building and the proposed design use the same default system (refer to sections 3.6.2). [Efficiency Metric: SEER]
SplitAirCond	Split air conditioning systems. Distribution system shall be one of the ducted systems. [Efficiency Metric: SEER and EER]
PkgAirCond	Central packaged air conditioning systems less than 65,000 Btuh cooling capacity. Distribution system shall be one of the ducted systems. [Efficiency Metric: SEER and EER]
LrgPkgAirCond	Large packaged air conditioning systems rated at or above 65,000 Btu/hr (cooling capacity). Distribution system shall be one of the ducted systems. [Efficiency Metric: EER]
RoomAirCond	Non-central room air conditioning cooling systems. These include small ductless split-system air conditioning units and packaged terminal (commonly called through-the-wall) air conditioning units. Distribution system shall be DuctIndoor. [Efficiency Metric: EER]
SplitHeatPump	Cooling side of split heat pump systems. Distribution system shall be one of the ducted systems. [Efficiency Metric: SEER and EER<65,000 Btu/hr EER>65,000 Btu/hr]
PkgHeatPump	Cooling side of central single-packaged heat pump systems with a cooling capacity less than 65,000 Btuh. Distribution system shall be one of the ducted systems. [Efficiency Metric: SEER]
LrgPkgHeatPump	Cooling side of large packaged heat pump systems rated at or above 65,000 Btu/hr (cooling capacity). Distribution system shall be one of the ducted systems. [Efficiency Metric: EER]
GasCooling	~~Cooling side of a gas engine driven heat pump or air conditioner and~~ Gas absorption cooling. Three ~~Two~~ descriptors ~~efficiencies~~, COP95, the rated ~~a~~ COP for the gas portion, CAP95, the rated capacity, and PPC, the parasitic electric energy at rated conditions in Watts.~~a COP for the electric portion. Descriptors expressed as COPcoolingas / COPcoolingelectric~~.
RoomHeatPump	Cooling side of non-central, room heat pump systems. These include small ductless split-system air conditioning units and packaged terminal (commonly called "through-the-wall") units. Distribution system shall be DuctIndoor. [Efficiency Metric: EER]
EvapDirect	Direct evaporative cooling systems. The SEER is set to 11.0. The default distribution system location is DuctAttic; evaporative cooler duct insulation requirements are the same as those for air conditioner ducts. [Efficiency Metric: SEER]
EvapIndirDirect	Indirect-direct evaporative cooling systems. The SEER is set to 13.0. The default distribution system location is DuctAttic; evaporative cooler duct insulation requirements are the same as those for air conditioner ducts. [Efficiency Metric: SEER]

~~RF, RE, TE, or AFUE~~ Table R2-3 – HVAC Distribution Type and Location Descriptors

Recommended Descriptors	HVAC Distribution Type and Location Reference
Air Distribution Systems	Fan-powered, ducted distribution systems that can be used with most heating or cooling systems. When ducted systems are used with furnaces, boilers, or combined hydronic/water heating systems the electricity used by the fan shall be calculated using the methods described later in this manual. R-value shall be specified in "Duct R-value" column when a ducted system is specified
DuctsAttic	Ducts located overhead in the unconditioned attic space
DuctsCrawl	Ducts located underfloor in the unconditioned crawl space
DuctsCVC	Ducts located underfloor in a controlled ventilation crawl space
DuctsGarage	Ducts located in an unconditioned garage space.
DuctsBasemt	Ducts located in an unconditioned basement space
DuctsInEx12	Ducts located within the conditioned floor space except for less than 12 lineal feet of duct, typically an HVAC unit in the garage mounted on return box with all other ducts in conditioned space.
DuctsInAll	HVAC unit or systems with all HVAC ducts located within the conditioned floor space. Location of ducts in conditioned space eliminates conduction losses but does not change losses due to leakage. Leakage from either ducts that are not tested for leakage or from sealed ducts are modeled as leakage to outside the conditioned space.
DuctsNone	Air distribution systems without ducts such as ductless split system air conditioners and heat pumps, window air conditioners, through-the-wall heat pumps, etc.
DuctsOutdoor	Ducts located in exposed locations outdoors.
Ductless Systems	Ductless radiant or warm/cold air systems using fan-forced or natural air convection and hydronic systems relying upon circulation pumps and fan-forced or natural air convection, and
Furnaces	Heating equipment such as wall and floor furnaces
Radiant	Radiant electric panels or fanless systems used with a boiler, electric or heat pump water heater, or combined hydronic heating equipment.
Baseboard	Electric baseboards or hydronic baseboard finned-tube natural convection systems

2.2.17 Maximum Cooling Capacity

This listing is always provided, however, the column for maximum cooling capacity is completed only when compliance credit is specified for verified cooling capacity is specified in Section 2.2.16 HVAC Systems. Systems may claim this credit only if they also have claimed credit for the combination of verified adequate airflow, sealed and tested new duct systems, and proper refrigerant charge (or alternatively a TXV). The design loads are calculated in accordance with appendix RF-2005 using the 1.0% Summer Design Dry Bulb and 1.0% Summer Design Wet Bulb outdoor design temperature data from Joint Appendix ACM II and inside design temperatures from Standards Section 150(h). Heating system sizing is not required, but may be included at the ACM vendors option.

HVAC SIZING

Location: Modesto, Cooling design Temp = 99, Cooling Daily Range = 28

Equipment Type	Sensible Design Cooling Load Btu/hr)	Design Cooling Capacity at ARI Rated Conditions Design Equipment Capacity (Btu/hr)	Maximum Cooling Capacity for Verified Cooling Capacity ACM Credit (Btu/hr)
Zone=Living			
AirCond-Split	**19730**	**23470**	**N/A**
Zone=Sleeping Living			
AirCond-Split	9873	11270	N/A
Building Total	29603	34740	40740

- *Equipment Type.* The type of heating or cooling equipment.

- *Sizing Location.* Location for sizing calculation from list in the Joint Appendices ACM II.
- *Cooling Outside Design Temperature* (°F). As defined for the sizing location in the Joint Appendices ACM II.
- *Cooling Outside Daily Range* (°F). As defined for the sizing location in the Joint Appendices ACM II.
- *Inside Design Temperature (*°F). As required in Standards Section 150(h).
- *Sensible Design Cooling Load (Btu/hr*). Total sensible cooling load at design conditions including duct losses. Calculated in accordance with Appendix RF-2005.
- *Design Cooling Capacity at ARI Conditions (Btu/hr*). Rated capacity needed to meet the Sensible Design Cooling Load calculated in accordance with Appendix RF-2005.
- *Maximum Allowable Cooling Capacity for ACM Credit for the building.* Maximum total rated system cooling capacity that may be installed if claiming the sizing credit. For buildings with more than one system the sum fo the sizes of the equipment installed must be less than the total *Allowable Cooling Capacity for ACM Credit for the building*. Calculated in accordance with Appendix RF-2005.

2.2.18 Duct Systems

This listing shall be displayed any time ducts are included in the heating and/or cooling system sealing and testing is specified. As many rows as necessary may be used to describe each duct system.

DUCT SYSTEMS

Equipment Type	Distribution Type and Location	Duct R-value (h-ft²-°F/Btu)	Verified Duct Leakage
Furnace / SplitAirCond	DuctsAttic	4.2	Not Tested
Furnace / SplitAirCond	DuctsAttic	8	Tested New Ducts
Furnace / SplitAirCond	DuctsAttic	4.2	Tested Existing Ducts

- *Equipment Type.* The type of heating or cooling equipment. This is specified separate from the distribution type. Required heating equipment and cooling equipment entries are listed in Table R2-1 and Table R2-2. When the proposed house is not air conditioned, the entry should be NoCooling. If more than one type of equipment is specified, they may be listed on subsequent rows.
- *Duct R-value (hr-ft^2-°F/Btu)*. The nominal R-value of the duct insulation.
- *Distribution Type and Location*. The default distribution type and location is a ducted, central system with 100% of the ducts in the attic. If a duct design is specified with duct locations on the plans but without specific duct surface areas (sizes and lengths) specified, the *Special Features and Modeling Assumptions* listing shall specify the default duct locations. To use DuctsCrawl or DuctsBsmt, all supply registers shall be in the floor or within two feet of the floor and the *Special Features and Modeling Assumptions* listings shall indicate that all supply registers are in the floor or within two feet of the floor. These two cases do not require field verification. All other cases require field verification.
- *Verified Duct Leakage*. If verified (tested) duct leakage is specified by the user, the requirement for diagnostic testing shall be reported in the *Field Verification and Diagnostic Testing* listings on the CF-1R.

2.2.19 Supply Duct System Details

This listing shall be displayed any time credit for ducts in conditioned space, reduced duct surface area, and/or combinations of higher performance insulation (including ducts buried under the attic insulation) are specified. The portions of duct run located on the floor of the attic within 3.5 inches of the ceiling gypsum board and covered or partially covered with blown attic insulation of R-30 or greater in houses meeting the criteria for Insulation Installation Quality (ACM RH) may take credit for increased effective duct insulation. A full

description of the requirements and criteria for supply duct system details is in Section 4.8 below. As many rows as necessary may be used to describe each duct run. These credits shall also be reported in the *Special Features and Modeling Assumptions* listings.

SUPPLY DUCT SYSTEM DETAILS

Description	Location	Duct Length (ft)	Duct Diameter (in.)	Duct Insulation R-value (h-ft²-°F/Btu)	Buried Duct	Attic Insulation R-value (h-ft²-°F/Btu)	Attic Insulation Type
Main 1	Attic	35	16	4.2	No	N/a	N/a
Branch 1	Crawlspace	15	12	4.2	No	N/a	N/a
Branch 2	Conditioned	10	12	4.2	No	N/a	N/a
Run 1	Attic	22	6	4.2	Yes	38	Fiberglass
Run 2	Attic	17	6	4.2	Yes	38	Cellulose
Run 3	Attic	12	6	4.2	Deep	38	Cellulose

Effective Supply System Duct R-value = 5.6

- *Description (text):* Description given to each length of supply duct.
- *Location* (prescribed descriptor): The location of the duct. Permissible types: Listed in Table R2-3.
- *Duct Length (ft).* The length of the duct in feet.
- *Duct Diameter (in.)* The diameter of the duct in inches.
- *Duct Insulation R-value (hr-ft^2-°F/Btu).* The nominal R-value of the duct insulation.
- *Buried Duct (prescribed descriptor).* The choices are 'Yes', 'No' or 'Deep'. 'No' means that the ducts are not buried and no credit is being taken. 'Yes' means that this duct is located on the floor of the attic within 3.5 inches of the ceiling gypsum board and will be covered or partly covered by blown ceiling insulation. 'Deep' applies when duct segment is deeply buried in lowered areas of ceiling and has at least 3.5" of blown insulation above the top of the duct.
- *Attic Insulation R-value (hr-ft^2-°F/Btu).* The nominal R-value of the attic insulation covering buried ducts
- *Attic Insulation Type (prescribed descriptor).* The choices are 'Fiberglass' for blown fiberglass or 'Cellulose' for blown cellulose.

~~2.1.172.2.20 Package D specifications for the applicable climate zone~~ Special Systems - Hydronic Distribution Systems and Terminals

This listing ~~must~~shall be completed for hydronic systems that have more than 10 feet of piping (plan view) located in unconditioned space. As many rows as necessary may be used to describe the piping system. Note that hydronic heating systems (combined or not) ~~must~~shall be reported in the *Special Features and Modeling Assumptions* listings. The entry for the *Special Features and Modeling Assumptions* listings ~~must~~shall indicate any additional listings that are reported for this feature so that the local enforcement agency can verify the additional information needed to check this special feature.

SPECIAL SYSTEMS - HYDRONIC DISTRIBUTION SYSTEMS AND TERMINALS

Distribution System Name	Terminal Type	Number (#)	Piping Run Length (ft)	Nominal Pipe Size (in)	Insulation Thickness (in)	Insulation R-value
HydFanCoil	FanCoil	1	15	1.5	1.5	6.0
	Baseboard	1	20	,75	1	4.0
	FanCoil	1	15	.5	1.5	4.0

- *System Name (text):* Description given to the hydronic system.

- *Terminal Type (prescribed descriptor):* The type of terminal equipment used in the system. Permissible types: Listed in Table R2-4.

Table R2-4 – Hydronic Terminal Descriptors

Descriptor	Hydronic Terminal Reference
FanCoil	Ducted fan coil used in central systems
Baseboard	Baseboard convector using natural convection
RadiantFlr	Radiant floor

- *Piping Run Length (ft)*. The length (plan view) of distribution pipe located in unconditioned space, in feet, between the primary heating/cooling source and the point of distribution.
- Nominal *Pipe Size.* The nominal (as opposed to true) pipe diameter in inches.
- *Insulation Thickness (in).* The thickness of the insulation in inches. Enter "none" if the pipe is uninsulated.
- *Insulation R-value (hr-ft^2-°F/Btu)*. The installed R-value of the pipe insulation. Minimum pipe insulation for hydronic systems is as specified in Standards Section 150 (j). ~~R-4 for 2" or smaller pipe, and R-6 for pipe diameter larger than 2"~~.

2.2.21 Water Heating ~~Systems~~

Water Heating Systems

This set of listings include~~s~~ information about water heating systems. A water heating system may serve more than one dwelling unit or a single dwelling unit may have more than one water heating system. A water heating system may also have more than one water heater, but may have only one distribution system. Each water heating system in the building is defined in one or more rows in the following table. Data in this table is associated with data in the Water Heating System Credits Table~~,~~ and the Water Heater Equipment Detail Table~~, and the Water Heating System Assignments Table~~. When there are multiple water heater types in a system, the last ~~six~~ two columns may be repeated as necessary.

When an ACM models a water heating system that does not have a single separate water heater serving each dwelling unit, it shall be reported in the *Special Features and Modeling Assumptions* listings of the CF-1R. The *Special Features and Modeling Assumptions* listing shall cross-reference the listing below whenever multiple water heaters serve one or more dwelling units or when a single water heater serves more than one dwelling unit. Information concerning auxiliary energy systems, the performance and features of instantaneous gas, large storage gas and indirect gas water heaters, and combined hydronic equipment, if installed, shall also be included in the *Special Features and Modeling Assumptions listing* if energy credit is taken for such systems.

WATER HEATING SYSTEMS (Multiple systems in single dwelling unit)

System Name	Distribution System in Unit(s)	Recirculation System Control	Water Heater Name	Number of WH in System
~~Upper Floors~~System 1	Recirc/Timer	n. a.	State100	~~3~~1
~~Lower Floors~~System 2	Recirc/Timer	n. a.	State50	~~4~~1
~~Kitchens~~System 3	~~POU~~pOU	n. a.	Loch006	1~~8~~

WATER HEATING SYSTEMS (Systems serving multiple dwelling units)

System Name	Distribution System in Unit(s)	Recirculation System Control	Water Heater Name	Number of WH in System
System 1	Stnd	RTm/Tmp	State100	3
System 2	Stnd	RDmd	State50	4

- *System Name.* This is a user defined name for the water heating system that provides a link between the water heating systems table, the Water Heating Systems Credits ~~Table~~table, and the Water Heater/Boiler Equipment Detail ~~System Assignments~~ ~~Table~~table.
- *Distribution System in Unit(s)~~Type~~.* Several specific distribution systems are recognized for distributing water within each dwelling unit. ~~.~~The distribution system listed in this column should be selected from Table R2-5. ~~will be one of the following choices. Qualifying requirements for these distribution systems are included in Section 6.6 of the *Residential Manual*.~~
- *Recirculation System Control.* This is only used for systems that serve multiple dwelling units. Enter a type of control from Table R2-6.
- *Water Heater Name (text)*. This is a user defined name that provides a link between the *Water Heater System* table and the *Water Heater Equipment Detail* table. This table may be repeated if different types of water heaters are used in the same system.

~~*Water Heater Type*. The water heater type will be one of the following choices. The large storage gas water heaters are larger than the 75,000 Btu/h maximum input rated by the National Appliance Energy Conservation Act (NAECA). Indirect gas water heaters are essentially a boiler with a separate storage tank. Additional data required for large storage gas and indirect gas types is entered later in the Water Heater Equipment Detail table. "Gas" is used for propane as well as natural gas. If oil water heaters are used, the "gas" choices may be selected.~~

- *Number of WH in System.* The number of identical water heaters of this type in the system.

~~*Number in System.* The number of identical water heaters that exist in the system.~~

~~*Energy Factor*. The energy factor is the principal performance factor for water heater types subject to NAECA regulations, including storage gas, storage electric, instantaneous electric and heat pump water heaters. If the energy factor is not published, this means that the water heater is not covered by NAECA and the Water Heater Equipment Detail Table must~~shall ~~be completed.~~

~~*Tank Size (gal).* The storage tank capacity in gallons. This input is applicable to all storage type water heaters.~~

~~Note: External Insulation Wrap is no longer allowed as a modeling option for approved ACMs.~~

Table R2-5 – Water Heating Distribution System (Within Dwelling Units) Descriptors

Distribution System Measure	Code	Description
Pipe Insulation (kitchen lines ≥ 3/4 inches) – Standard Case	STD ~~Stnd~~	Standard (non-recirculating) potable water heating system with tank storage remote from points of consumptive use. The portions of the pipe run from the water heater to the kitchen fixtures that are equal to or greater than 3/4 inch in diameter are~~is~~ insulated, as required by Section 151 (f) 8 D~~the mandatory measures~~.
Pipe Insulation (all lines)	PIA	All pipes from the water heater to the fixtures are insulated, not just the ones equal to or greater than 3/4 inches to the kitchen, which is required by Section 151 (f) 8 D ~~mandatory~~.
Standard pipes with no insulation	SNI	Standard water heating system with no insulation on pipes equal to or greater than 3/4 inches in diameter to the kitchen.
Point of Use	POU	Point-of-use potable water heating system, within 8' of fixtures
Parallel Piping	PP	A~~n~~ system of individual pipe runs from a manifold at the water heater to each fixture. This is also sometimes called homerun piping.
Recirculation (no control)	RNC	Recirculation system, with no control. The pump runs continuously.
Recirculation + timer control	RTm	Recirculation system, with timer control. The pump operates on a timeclock.
Recirculation + temperature control	RTmp	Recirculation system, with the pump controlled to maintain a minimum temperature in the circulation system.
Recirculation + timer/temperature	RTmTmp	Recirculation system, with combination timer control and temperature control.
Recirculation + demand control	RDmd	Recirculation system, with demand control.

Table R2-6 – Control Systems for Multi-Unit Distribution Systems

Type of Control	Code	Description
Uncontrolled Recirculation	NoCtrl	Circulation pump runs continuously.
Timer Control	STD ~~RTm~~	Recirculation system, with timer control. The pump operates on a timeclock.
~~Temperature Control~~	~~RTmp~~	~~Recirculation system, with the pump controlled to maintain a minimum temperature in the circulation system.~~
~~Timer/Temp Control~~	~~RTmTmp~~	~~Recirculation system, with combination timer control and temperature control.~~
~~Demand Recirculation~~	~~RDmd~~	~~Recirculation system, with demand control~~

Table R2-7 – Water Heater Types

Recommended Descriptor	Water Heater Reference
StoGas	Gas, propane, or oil-fired storage tank > 2 gal, input < 75,000 Btu/hr
LgStoGas	Gas, propane, or oil-fired storage tank, input > 75,000 Btu/hr
StoElec	electric-resistance-heated storage tank > 2 gal
InstGas	instantaneous gas-fired, storage < 2 gal
InstElec	instantaneous electric-resistance-heated, storage < 2 gal
StoHP	electric heat pump with storage tank
IndGas	storage tank indirectly heated by gas- or oil-fired source
Boiler	boiler dedicated solely to hydronic space heating

Table R2-8 – Pipe Conditions for Systems Serving Multiple Dwelling Units

System Name	Length of pipes inside the space	Insulation of pipe inside the space	Length of pipes in ambient air	Insulation of pipes in ambient air	Length of pipes underground	Insulation of pipes underground
System 1	88	Standard	32	Extra	0	N/a
System 2	96	Standard	16	Standard	0	N/a

~~Special~~ Water Heater/Boiler Equipment Detail~~s~~

This listing provides information about the energy characteristics of the water heaters or boilers used to provide either domestic hot water or space heating through a combined hydronic (*CombHydro*) system. This table may be used for both NAECA and for non-NAECA water heaters (as specified by the Appliance Efficiency Regulations). This listing describes the equipment that serves the water heating system or systems. ~~It is only necessary to complete this table for combined hydronic systems and for non-NAECA water heaters.~~ The information in the table will not be applicable to every water heater type. ~~The use of these features for performance compliance requires listing in the *Special Features and Modeling Assumptions* listings of the CF-1R and the C-2R. The *Special Features and Modeling Assumptions* listing must~~shall ~~cross-reference the listing below which must be included as part of the C-2R when any of these Special Water Heating Equipment characteristics are modeled by the ACM.~~ When the information is not applicable, "na" may be reported.

~~SPECIAL~~ WATER HEATER/BOILER ~~/BOILER~~ EQUIPMENT DETAIL~~S~~

Water Heater Name	Type	~~Recovery~~ Efficiency ~~(fraction)~~	~~AFUE~~ Efficiency Units ~~(fraction)~~	Tank Size (gal)	Rated Input (kBtuh)	Combined Hydronic Pump (watts)	Standby Loss (fraction)	Tank Total R-value (hr-ft^2-°F/Btu)	Pilot Light (Btu/h)
CombHydState100	Boiler	0.78	AFUE	40	60.00		na	na	na
BigRmWH	LgStoGas	0.79	RE	50	75.00		0.04	15.30	na
Loch006	StoGas	0.78~~na.~~	EF~~0.78~~	30	na.		na.	Na.	na.
State100 Hydro	StoGas	0.79~~na.~~	EF~~0.79~~	30	40	40	na.	Na.	na.
State50	StoGas	0.80~~na.~~	EF~~0.80~~	40	na.		na.	Na.	na.

- *Water Heater Name (text):* Name of water heater specified in the Water Heating Systems listing. In the case of a hydronic system heater, the name shall be unique in order to distinguish it from other water heaters.
- *Water Heater Type (recommended descriptor).* The water heater type will be one of the following choices from Table R2-7. The large storage gas water heaters are larger than the 75,000 Btu/h maximum input rated by the National Appliance Energy Conservation Act (NAECA). Indirect gas water heaters are essentially a boiler with a separate storage tank. Additional data required for large storage gas and indirect gas types is entered later in the Water Heater Equipment Detail table. "Gas" is used for propane as well as natural gas. If oil water heaters are used, the "gas" choices may be selected.

- *Efficiency.* The efficiency of the water heater.
- *Efficiency Units.* Enter the units used for efficiency. For NAECA water heaters the energy factor (EF) will be entered. Thermal~~Recovery~~ efficiency is the performance measure for instantaneous gas water heaters (*InstGas*), large storage gas/oil water heaters (*LgStoGas*) and indirect gas/oil water heaters (*IndGas*). It is also required for storage gas/oil water heaters (*StoGas*) used in combined hydronic systems (*CombHydro*). The value is taken from the Commission's appliance databases or from Commission-approved trade association directories. If the value is omitted for NAECA regulated water heaters, then the default value will be assumed. When boilers are used to fire an indirect gas/oil water heater (*IndGas*), the value of the AFUE or Thermal Efficiency (see below) is used for the recovery efficiency.
- *Tank Size for Direct Fired Tanks(gal).* The storage tank capacity in gallons. This input is applicable to all storage type water heaters. For NAECA covered water heaters, the input is optional.
- *Tank Size for Indirect Fired Tanks (gal).* The indirect fired storage tank capacity in gallons. This input is applicable to all hot water storage tanks that do not have an integral heating element or burner.
- *Combined Hydronic Pump (watts).* This is needed only for electric combined hydronic systems. It is not needed for storage gas or heat pump combined hydronic systems.
- *Rated Input (kBtu/hr for gas and kW for electric):* The energy input rating from the above directories or from the manufacturer's literature. Entries are required for large storage gas/oil water heaters *(LgStoGas)*, indirect gas/oil water heaters (*IndGas*), and when storage gas water heaters (*StoGas/LgStoGas*) or heat pump water heaters (*StoHP*) are used in combined hydronic space heating systems (*CombHydro*).
- *Standby Loss (fraction):* The fractional storage tank energy loss per hour during non-recovery periods (standby) taken from the Commission's database cited above. Applicable only to large storage gas water heaters (*LgStoGas*).
- *Tank R-value (hr-ft^2-F/Btu):* The total thermal resistance of the internally-insulated tank and any external insulation wrap. Applicable to large storage gas/oil (*LgStoGas*) and indirect gas/oil (*IndGas*) water heaters only.
- *Pilot light (Btu/hr)*: The pilot light energy consumption rating from the Commission's database. Applicable only to instantaneous gas (*InstGas*) and indirect gas/oil (*IndGas*) water heaters.

~~*Water Heater Name.* This is a user defined name that provides a link to the water heater system table. In the case of a hydronic system heater, the name should be descriptive of this function to distinguish it from any domestic water system heaters.~~

~~*Recovery Efficiency (fraction).* Recovery efficiency is the performance measure for instantaneous gas water heaters, large storage gas water heaters and indirect gas water heaters. It is also needed for storage gas water heaters used in combined hydronic systems. The value is taken from the CEC Appliance Database or from manufacturers literature. If the value is omitted for NAECA regulated water heaters, then the default value will be assumed.~~

~~*AFUE (fraction).* The Annual Fuel Utilization Efficiency, the heating efficiency of the water heater based upon approved test methodologies. Values of AFUE are listed in the Commission Appliance Database.~~

~~*Rated Input (kBtu/h).* The energy input, in kBtu/h (thousands of Btus per hour), from the CEC Appliance Database or from manufacturers literature. This is needed for large storage gas and indirect gas water heaters and when storage gas water heaters or heat pump water heaters are used for combined hydronic space heating.~~

~~*Combined Hydronic Pump (watts).* This is needed only for electric combined hydronic systems. It is not needed for storage gas or heat pump combined hydronic systems.~~

~~*Standby Loss (fraction).* The standby loss percent per hour (taken from the CEC Appliance Database or from manufacturers literature) divided by 100. Applicable to large storage gas water heaters only.~~

~~*Tank Total R-value (hr-ft^2-°F/Btus).* The total thermal resistance for both the tank and the insulation. This input is applicable to large storage gas and indirect gas water heaters only.~~

~~□*Pilot Light (Btu/h)*. The pilot light energy, in Btu/h, from the CEC Appliance Database or from manufacturers literature. This column is only applicable for instantaneous gas water heaters and indirect gas water heaters.~~

Table R2-9 summarizes the applicability of the inputs for the water heater types recognized by the calculation method.

Table R2-9 – Water Heater Input Summary

Input Item	NAECA Storage Gas	NAECA Storage Electric	NAECA Heat Pump	Instant. Gas	Instant. Electric	Large Storage Gas	Indirect Gas
Energy Factor	Yes	Yes	Yes	Yes	Yes		
Pilot Input, Btu				Yes		Yes	Yes
Efficiency, %				Yes		Yes	Yes
Standby Loss, %						Yes	
Tank Volume, gal.	Yes	Yes	Yes			Yes	Yes
Tank Insulation, R						Yes	Yes
Ext. Insulation, R						Yes	Yes
If Combined Hydronic System:							
Rated Input, kBtuh	Yes					Yes	Yes
Rated Input, kW~~l~~		Yes	Yes				
Recovery Eff, %	Yes		Yes			Yes	Yes
Pump Input, Watts		Yes				Yes	Yes

~~***Special Water Heating System Assignments***~~

~~In multi-unit buildings or buildings with more than one water heating system, it is necessary to assign water heating systems to the dwelling units that they serve. This is necessary in order for the recovery load to be properly calculated for each system. When an ACM models a water heating system that does not have a single separate water heater serving each dwelling unit, it must be reported in the *Special Features and Modeling Assumptions* listings of the CF-1R and the C-2R. The *Special Features and Modeling Assumptions* listing must cross-reference the listing below which must be included as part of the C-2R whenever multiple water heaters serve one or more dwelling units or when a single water heater serves more than one dwelling unit and is modeled by the ACM for compliance.~~

~~In the example below, the building has three water heating systems labeled "upper-floors", "lower-floors" and "kitchens". The "upper-floors" and "lower-floors" systems are both central gas water heaters with recirculating distribution systems. The kitchens in each dwelling unit have their own point of use instantaneous electric water heaters (all of which may be grouped together as one system).~~

~~SPECIAL WATER HEATING SYSTEM ASSIGNMENTS *(Example Listing)*~~

~~Number of Units~~	~~CFA per Unit~~	~~Name(s) of System(s)~~
~~8~~	~~1000~~	~~Upper Floors~~ ~~Kitchens~~
~~10~~	~~800~~	~~Lower Floors~~ ~~Kitchens~~

~~SPECIAL WATER HEATING SYSTEM ASSIGNMENTS *(Example Listing)*~~

~~Number of Units~~	~~CFA per Unit~~	~~Name(s) of System(s)~~
~~1~~	~~1800~~	~~Main~~

~~□Number of Units. The number of dwelling units served by this system assignment.~~

~~□CFA per Unit. The average conditioned floor area per dwelling unit in this system assignment.~~

Name(s) of Systems(s). The water heating system names associated with this assignment. Names must correspond to system names defined in the Water Heating Systems table.

Special Water Heating System Credits

This section includes information about water heating auxiliary energy credits, if used. These features are optional capabilities for ACMs and their use for performance compliance requires listing in the *Special Features and Modeling Assumptions* listings of the CF-1R and the C-2R. The *Special Features and Modeling Assumptions* listing mustshall cross-reference the listing below which must be included as part of the C-2R when any of these applicable optional water heating capabilities are modeled by the ACM.

WATER HEATING SYSTEMS MISC *(Example Listing)*

System Name	Solar Savings Fraction or SEF	SRCC Certification Number	Wood Stove Boiler?	Wood Stove Boiler Pump?	Combined Hydronic Pump Power (Watts)
Hydronic	0.00	*None*	*Yes*	*Yes*	60.00
DHW	0.66	*0002-1999-223*	*No*	*No*	

SPECIAL WATER HEATING SYSTEM CREDITS

System Name	Solar Savings Fraction	Pump Energy (Y/N)	Wood Stove Boiler? (Y/N)	Wood Stove Boiler Pump? (Y/N)
Upper Floors	.60	Y	na.	na.

- *System Name.* This is a name corresponding to a system name defined in the Water Heating Systems table.
- *Solar Savings Fraction (SF) or Solar Energy Factor (SEF)*. If the water heating system has a solar system to provide auxiliary part of the water heating, the solar savings fractionSF or SEF is entered in this column. The solar savings fractionSF shall may be determined using f-Chart or other methods approved by the CEC. A system may have solar auxiliary or a wood stove boiler, but not both. the procedures defined with the optional modeling capability in Chapter 6. .
- *SRCC Certification Number. Enter the SRCC certification number for the solar system (OG-300 rated) or the collectors (OG-100 rated). This number is issued by the SRCC when a product is certified.*

Pump Energy (Y/N). This is a yes/no response to indicate whether or not pump energy should be considered in the ACM calculation. "No" should be entered if the solar system does not have a recirculation pump or if the energy of the pump was already included in the supporting f-Chart analysis. "Yes" is entered only if the system has a pump and it was not considered in the f-Chart analysis. Active solar systems generally have a pump, while thermosyphon and integral collector storage (ICS) systems generally do not.

- *Wood Stove Boiler (Y/N).* This is a yes/no response on whether or not the system has a wood stove boiler. A credit may be taken for either solar systems or for a wood stove boiler, but not both.
- *Wood Stove Boiler Pump (Y/N).* This is a yes/no response to indicate whether the wood stove boiler has a recirculation pump.
- *Combined Hydronic Pump (Watts):* Required only for electric combined hydronic *(Elec/, StoElec/ and InstElec/CombHydro*) systems. Not required for storage gas/oil or heat pump combined hydronic systems (*StoGas/, LgStoGas/, and StoHP/CombHydro*).

2.1.192.2.22 Special Features and Modeling Assumptions

This listing shall **stand out and command the attention** of anyone reviewing this form to emphasize the importance of verifying these Special Features and the aspects of these features that were modeled to achieve compliance or the energy use results reported. This listing in the Certificate of Compliance shall include any special features of the building that affect the building's compliance with the standards. For example, water heating features, or auxiliary credits shall be listed under "*Special Features and Modeling Assumptions*" as well

as being listed under a special listing of their own. The use of certain non-default values shall also be included in this list. These special default values are indicated in the subsequent text.

~~This listing must **stand out and command the attention** of anyone reviewing this form to emphasize the importance of verifying these Special Features and the aspects of these features that were modeled to achieve compliance or the energy use results reported.~~ This is a free format section for the ~~C~~ CF-1R ~~2R~~ report to note any special features about the building that are needed to verify compliance.

SPECIAL FEATURES AND MODELING ASSUMPTIONS: *(Example Listing)* Plan Field~~SPECIAL FEATURES AND MODELING ASSUMPTIONS: *(Example Listing)*~~

This house has Zonal control with multiple zones, interzone surfaces, and interzone ventilation.		
~~This house has zonal control and multiple zones,~~		
This building uses metal-framed walls that shall meet mandatory insulation requirements. In many cases sheathing insulation is used in addition to cavity insulation.		
~~This house uses a non-NAECA large storage gas water heater. Check the C-2R SPECIAL WATER HEATER/BOILER DETAILS listing for specifications.~~		
This house uses a non-NAECA large storage gas water heater. Check the SPECIAL WATER HEATER/BOILER DETAILS listing for specifications.		
This house has an attached sunspace with interzone surfaces, custom solar heat gain distribution and sunspace thermal mass elements.		
~~This house has an attached sunspace with interzone surfaces, interzone ventilation, and custom solar heat distribution.~~		
This house is modeled with reduced infiltration and/or mechanical ventilation. Consequently the homeowner's manual provided by the builder to the homeowner shall include operating instructions for the homeowner on how to use operable windows and/or mechanical ventilation to achieve adequate ventilation.		

~~2.1.2~~02.2.23 Field Verification and Diagnostic Testing~~HERS Required Verification~~

~~Specific features that require diagnostic testing to assure proper installation require field testing and verification by a certified home energy rater under the supervision of a Commission-approved HERS provider, and must be listed in this section.~~ This listing ~~must~~shall **stand out and command the attention** of anyone reviewing this form to emphasize the importance of ~~HERS verification~~ Field Verification and Diagnostic Testing of these features and the aspects of these features that were modeled to achieve compliance~~. or the energy use results reported~~.

Specific features that require diagnostic testing to assure proper installation require field testing and verification by a certified home energy rater (HERS rater) under the supervision of a CEC- approved HERS provider, and shall be listed in this section.

All items in the *Field Verification and Diagnostic Testing* listings shall also report that the installer and HERS rater shall both provide the appropriate CF-6R and CF-4R documentation, respectively, for proper installation, testing, and test results for the features that require verification by a HERS rater. The installer shall document and sign the CF-6R to verify compliance with design and installation specifications. The HERS rater shall document and sign the CF-4R to confirm the use of proper testing procedures and protocol, to report test results, and to report field verification of installation consistent with the design specifications needed to achieve these special compliance efficiency credits.

The ACM shall ask the user if there are vented combustion appliances inside the conditioned space that draw air for combustion from the conditioned space prior to accepting any entry for reduced infiltration or mechanical ventilation. Cooking appliances, refrigerators and domestic clothes dryers are excluded from this requirement. If appliances other than cooking appliances, refrigerators and domestic clothes dryers are present and use conditioned air for combustion, the ACM shall instruct the user that reduced infiltration shall not be modeled when these devices are part of the Proposed Design and block data entries and ACM modeling of reduced infiltration and mechanical ventilation. When the user indicates that such devices are present or when the user models reduced infiltration or mechanical ventilation, the ACM shall report in the *Special Features and Modeling Assumptions* listings that reduced infiltration and/or mechanical ventilation are prohibited from being modeled when vented combustion appliances, not excluded above, are inside conditioned space.

When a *Proposed Design* is modeled with a reduced target infiltration ($CFM50_H$) that corresponds to an SLA less than 3.0, mechanical ventilation is required and shall be reported in the *Field Verification and Diagnostic Testing* listings.

FIELD VERIFICATION AND DIAGNOSTIC TESTING

~~HERS REQUIRED VERIFICATIONS *(Example Listing)*~~

This house is using reduced duct leakage to comply and shall have diagnostic site testing of duct leakage performed by a certified HERS rater under the supervision of a CEC-approved HERS provider. The results of the diagnostic testing shall be reported on a CF-6R form and list the target and measured CFM duct leakage at 25 pascals.		
This house has tight construction with reduced infiltration and a target blower door test range between 586 and 1250 CFM at 50 pascals. The blower door test shall be performed using the ASTM *Standard Test Method for Determining Air Leakage Rate by Fan Pressurization*, ASTM E 779-99~~87 (Reapproved 1992)~~.		
This house is using an HVAC system with all ducts and the air handler located within the conditioned space. This results in a higher distribution efficiency rating due to elimination of conduction losses (losses due to leakage are not changed) and shall be visually confirmed by a certified HERS rater under the supervision of a CEC-approved HERS provider. This verification shall be reported on a CF-6R form.		
~~This house is using an HVAC system with all ducts and the air handler located within the conditioned space. This results in a higher distribution efficiency rating and must be visually confirmed by a certified HERS rater under the supervision of a CEC-approved HERS provider. This verification must be reported on a CF-6R form.~~		
~~This 1600 square foot house has tight construction with reduced infiltration and a target blower door test range of 586 to 1250 CFM at 50 pascals. The blower door test must be performed using the ASTM *Standard Test Method for Determining Air Leakage Rate by Fan Pressurization*, ASTM E 779-87 (Reapproved 1992).~~		
WARNING: If this house tests below 586 CFM at 50 pascals, the house shall either be provided with a ventilation opening that will increase the tested infiltration to at least 586 CFM at 50 pascals (SLA = 1.5) OR mechanical supply ventilation shall be provided that can maintain the house at a pressure of at least -5 pascals relative the outside average air pressure while other continuous ventilation fans are operating. Note also that the Commission considers an SLA≤1.5 to be "unusually tight" per the California Mechanical Code.		
~~WARNING: If this house tests below 586 CFM at 50 pascals, the house must either be provided with a ventilation opening that will increase the tested infiltration to at least 586 CFM at 50 pascals (SLA = 1.5) OR mechanical supply ventilation must be provided that can maintain the house at a pressure of at least -5 pascals relative the outside average air pressure while other continuous ventilation fans are operating.~~		
WARNING - Houses modeled with reduced infiltration are prohibited from having vented combustion appliances other than cooking appliances, refrigerators and domestic clothes dryers that use indoor air for combustion inside conditioned space.		
~~WARNING - Houses modeled with reduced infiltration and/or mechanical unbalanced exhaust ventilation are prohibited from having vented combustion appliances that use indoor air for combustion inside conditioned space.~~		

~~2.2.24HERS Provider Notification~~

~~When the documentation author provides a signed Certificate of Compliance (CF-1R) to the builder, which indicates that any measure requiring field verification and diagnostic testing is specified for compliance, the documentation author shall notify the HERS provider by phone, FAX, email or other electronic means of the name of the builder, the street address or subdivision and lot number of the building, and the measure(s) that require diagnostic testing and field verification. The documentation author shall certify on the CF-1R that this notification is completed.~~

~~2.2.25~~2.2.24 Compliance Statement and Signatures

Signature requirements and other details on the compliance statement are included in Section 10-103(a)1 of the Administrative Regulations (Title 24, Part 1). .

COMPLIANCE STATEMENT

This certificate of compliance lists the building features and performance specifications needed to comply with the Energy Standards in Title 24, Parts 1 and 6, of the California Code of Regulations, and the Administrative regulations to implement them. This certificate has been signed by the individual with overall design responsibility.

Designer or Owner (per Business & Professions Code) Name Title/Firm Address City & Zip Code Telephone License Number Signature/Date	Documentation Author Name Title/Firm Address City & Zip Code Telephone Signature/Date
Enforcement Agency Name Title Agency City Telephone Signature/Date	

3. Defining the Proposed and Standard Designs

The space conditioning energy budget for the ~~low-rise~~ residential Standards is a custom budget, that is, the energy that would be used by a building similar to the *Proposed Design*, but that is modified to just meet the requirements of the prescriptive standards. The building that is modeled to create the custom budget is the *Standard Design*. This section of the *ACM Approval Manual* describes how the *Proposed Design* and *Standard Designs* are defined.

For the ~~The~~ *Proposed Design*, the ~~is modeled based upon user inputs that are subject to a variety of restrictions as well as a variety of fixed and restricted assumptions regarding dwelling design and operation. The~~ user enters information to describe the thermal characteristics of the proposed building envelope including its surface areas, air leakage, shading structures and attachments, thermal mass elements, heating and cooling equipment and distribution systems, and water heating equipment and distribution systems. These inputs are subject to a variety of restrictions which are defined in this section. Modeling assumptions and algorithms for making energy calculations are described in Chapter 4.

The process of generating the *Standard Design* and calculating the custom budget ~~must~~shall be performed automatically by the program, based on the allowed and default inputs for the *Proposed Design* as well as the fixed and restricted inputs and assumptions for both designs. The process of custom budget generation ~~se operations~~ shall not be accessible to program users for modification when the program is used for compliance purposes or when compliance forms ~~can be~~ are generated by the program. The *Standard Design* generator ~~must~~shall automatically take user input about the *Proposed Design* and create ~~input data for~~ the *Standard Design*, using all the applicable fixed and restricted inputs and assumptions described in this Chapter and in Chapter 4. All assumptions and algorithms used to model the *Proposed Design* ~~must~~shall also be used in a consistent manner in the *Standard Design* building.

The basis of the *Standard Design* is prescriptive Package D, which is contained in Section 151(f) of the Standards. The Package D prescriptive requirements are not repeated here. However, the following sections present the details on how the *Standard Design* is to be developed. Defining the *Standard Design* building involves two steps.

- First, the geometry of the proposed building is modified from the description entered for the *Proposed Design*.
- Second, building features and performance characteristics are modified to meet the minimum requirements of compliance with ~~package~~ Package D ~~of the Standards~~.

~~The following sections present the details on how the *Standard Design* is to be developed.~~

~~3.2Basis of the Standard Design - Package D~~

~~The basis of the *Standard Design* is package D. The requirements of package D are contained in Section 151(f) of Title 24, Part 6 of the State Building Standards. These prescriptive requirements are not repeated here.~~

~~3.3~~3.1 Building Physical Configuration

Proposed Design. The building configuration is defined by the user through entries for ~~heavy and light~~ floor areas, wall areas, roof and ceiling areas, fenestration areas, and door areas. Each ~~, which~~ are entered along with performance characteristics such as U-factors, SHGC, thermal mass, etc. Information about the o~~the orientation of these building elements.~~ rientation and tilt is required for walls, fenestration and other elements. The user entries for all of these building elements ~~must~~shall be consistent with the actual building design and configuration. If the ACM ~~actually~~ models the specific geometry of the building by using a coordinate system or graphic entry technique, the ~~building geometry~~ data entered ~~must~~shall be as consistent as ~~reasonably possible with the actual building design~~ necessary to achieve thermal modeling accuracy.

Standard Design. The *Standard Design* building has the same floor area, volume, and configuration as the *Proposed Design*, except that wall and window area are distributed equally between the four main compass points, North, East, South, and West. The details are described below.

~~3.3.1~~3.1.1 Conditioned Floor Area

Proposed Design. The ACM ~~must~~shall require the user to enter the total conditioned floor area of the *Proposed Design* as well as the conditioned slab floor area. The conditioned slab floor area is the area of a slab floor with a minimum slab thickness of 3.5 inches or a minimum heat capacity of 7.0 Btu/°F-ft~~²ft~~^{2} ~~°F~~ and conditioned space above and unconditioned space or the ground/gravel below. The non-slab conditioned floor area is the total conditioned floor area minus the conditioned slab floor area. Stairwell floor area shall be included in conditioned floor area as the horizontal area of the stairs and landings between two floors of each story of the house. The conditioned slab floor area may be either on-grade or a raised slab.

Standard Design. The total conditioned floor area and the conditioned slab floor area of the *Standard Design* building is the same as the *Proposed Design*.

~~***Proposed Design & Standard Design***~~***Note.*** ACMs ~~must~~shall keep track of the conditioned floor area and ~~must~~shall at least be able to keep separate track of the total conditioned floor area and conditioned slab floor area. These areas are used to determine the default thermal mass for the *Proposed Design* and the thermal mass for the *Standard Design*. ~~Stairwell floor area is the horizontal area of the stairs and landings between two floors of each story of the house. The conditioned slab floor area may be either on-grade or a raised slab.~~

~~3.3.2~~3.1.2 Conditioned Volume

Proposed Design. The volume of the *Proposed Design* is the conditioned volume of air enclosed by the building envelope. The volume ~~must~~shall be consistent with the air volume of the actual design and may be determined from the total conditioned floor area and the average ceiling height or from a direct user entry for volume.

Standard Design. The volume of the *Standard Design* building is the same as the *Proposed Design*.

3.2 Opaque Envelope Elements

3.2.1 Insulation Installation Quality

Proposed Design. The ACM user may specify either *Standard* or *Improved* insulation installation quality for the *Proposed Design*. The presence of *Improved* insulation installation quality shall be reported in the *Field Verification and Diagnostic Testing* listings on the CF-1R. *Improved* insulation installation quality shall be certified by the installer and field verified.

Standard Design. The *Standard Design* shall be modeled with *Standard* insulation installation quality.

Note. Chapter 4 has the modeling rules for Standard and Improved insulation installation quality.

~~3.3.3~~3.2.2 Ceilings/Roofs

Proposed Design. The ACM shall allow a user to enter one or more ceiling/roof areas for the *Proposed Design* ~~from an approved list of roof/ceiling construction types~~. ~~Some of these construction types may be user-defined but the ACM must determine the output names for user-defined construction types for all building envelope constructions. The ACM shall not allow the user to specify output names for construction types or envelope elements.~~ The roof/ceiling areas, construction assemblies, orientations, and tilts modeled ~~must~~shall be consistent with the corresponding areas, construction assemblies, and tilts in the actual building design and ~~must~~shall ~~total~~ equal the overall roof/ceiling area with conditioned space on the inside and unconditioned space on the other side. ~~Except as indicated in the next sentence, the U-value of the modeled assembly must be the same as the U-value of the actual assembly.~~ U-factors shall be selected from ACM Joint Appendix IV. If new

~~C~~ceiling and wall construction assemblies ~~that~~ do not meet the mandatory minimum ~~U value~~U-factor required by Title 24, the building shall not pass compliance ~~shall not be allowed~~. ~~.~~ If the *Proposed Design* has *Improved* insulation installation quality, then all ceiling/roof assemblies in the *Proposed Design* are modeled accordingly (see Section 3.2.1 and Chapter 4).

Standard Design. The ceiling/roof areas of the *Standard Design* building are equal to the ceiling/roof areas of the *Proposed Design*. The *Standard Design* roof and ceiling surfaces are assumed to be horizontal (no tilts) and have a ~~U value~~U-factor specific to the package D requirements. The U-factors in Table R3-1 shall be used in the *Standard Design* for the appropriate R-value criteria in Package D. The *Standard Design* generator ~~must~~shall consider all exterior surfaces in the *Proposed Design* with a tilt less than 60 degrees as roof elements. Surfaces that tilt 60 degrees or more are treated as walls. The *Standard Design* is modeled with *Standard* insulation installation quality.

Table R3-1 – Ceiling/Roof U-factors for Standard Design

Building Component	R-value Requirement	U-factor	ACM Joint Appendix IV Refere8ce
Roof			
	R-30	0.032	IV1-A7
	R-38	0.026	IV1-A8

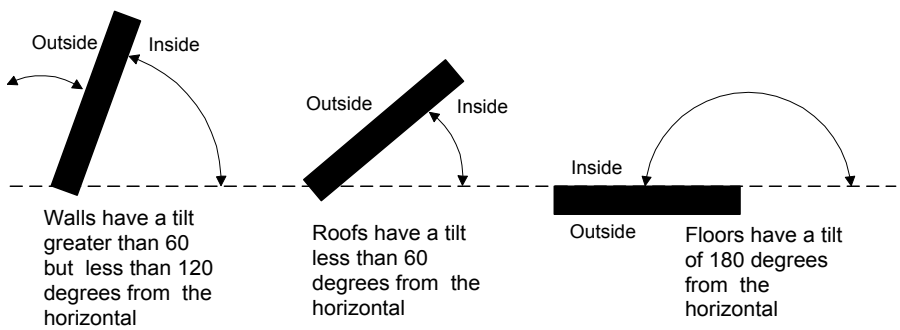

Figure R3-1 – Surface Definitions

~~3.3.4~~Radiant Barriers

Proposed Design. The ACM ~~must~~shall allow the user to input a radiant barrier. The presence of a radiant barrier ~~must~~shall be reported in the *Special Features and Modeling Assumptions* listings on the CF-1R ~~and C-2R~~.

Standard Design. The *Standard Design* shall have a radiant barrier in accordance with Package D requirements. When required by Package D, radiant barriers are required on all ceiling/roof surfaces. See Section 4.2.1 for radiant barrier eligibility criteria.

~~3.3.5~~Cool Roofs

Proposed Design. The ACM ~~must~~shall allow the user to input a cool roof. The presence of a cool roof ~~must~~shall be reported in the *Special Features and Modeling Assumptions* listings on the CF-1R ~~and C-2R~~.

Standard Design. The *Standard Design* shall be modeled without a cool roof.

~~3.3.6~~3.2.3 Wall~~ss~~

Proposed Design. The ACM shall allow a user to enter one or more wall areas for the *Proposed Design* ~~from an approved list of wall construction types~~. ~~Some of these construction types may be user-defined but the ACM must determine the name for user-defined construction types for all building envelope constructions. The ACM shall not allow the user to specify names for construction types or envelope elements.~~ The wall areas modeled ~~must~~shall be consistent with the corresponding wall areas in the actual building design and the total wall area

~~must~~shall be equal to the gross wall area with conditioned space on the inside and unconditioned space or exterior conditions on the other side. U-factors for *Proposed Design* wall constructions shall be selected from ACM Joint Appendix IV. If the *Proposed Design* has *Improved* insulation installation quality, then walls are modeled accordingly (see Chapter 4). Walls include all opaque surfaces with a slope greater than 60º but less than 120º from the horizontal (see Figure R3-1).

Standard Design. The gross wall area in the *Standard Design* run is equal to the gross wall area of the *Proposed Design*, including knee walls in the ceiling construction of the *Proposed Design*. The gross wall area in the *Standard Design* is equally divided between the four main compass points, North, East, South, and West. Window and door areas are subtracted from the gross wall area to determine the net wall area in each orientation. ~~All surfaces included in the *Proposed Design* run input file with a tilt from the horizontal of 60 degrees or more and less than 120 degrees are treated as walls. Surfaces that have a tilt of less than 60 degrees are considered to be roof surfaces.~~The *Standard Design* has *Standard* insulation installation quality. U-factors for the *Standard Design* walls shall be those from Table R3-2 for the appropriate Package D R-value criteria.

Table R3-2 – Wall U-factors for the Standard Design

Building Component	Package D R-value Criteria	Standard Design U-factor	ACM Joint Appendix IV Reference
Wall	R-13	~~0.102~~0.074	IV9-A3
	R-19	~~0.074~~0.065	IV9-A5
	R-21	~~0.069~~0.061	IV9-A6

~~3.3.7~~3.2.4 Basement Walls and Floors

Proposed Design. Portions of basement walls above grade ~~must~~ shall be modeled as conventional walls above grade. For below-grade basement walls, t~~T~~he user ~~must~~shall ~~be requested to e~~enter the area ~~of basement walls below grade as the area of below grade wall~~ at each of three~~3~~ depths: from~~or~~ ~~Zero~~ zero to 2 feet below grade (shallow), greater than 2 feet to 6 feet below grade (medium), and greater than 6 feet below grade (deep). The ACM shall allow users to enter as many wall types as necessary to model the ~~proposed construction~~*Proposed Design*. ~~The ACM must use the same method for determining t~~The ~~U-value~~U-factor, C-factor, and mass characteristics of below-grade walls shall be calculated using methods consistent with ACM Joint Appendix IV. ~~for below grade walls as used for above grade walls.~~ The ~~default~~ thermal performance characteristics ~~value~~ for the *Proposed Design* below-grade wall constructions shall be the same as the *Standard Design*.

Standard Design. The *Standard Design* shall have the same basement wall areas as the *Proposed Design* and at the same depths. The *Standard Design* basement wall shall be assumed to be a wall with a Heat Capacity of 15.7 Btu/(ft^2-^{o}F), a thickness of 8 inches, and a~~n~~ uniform R-value of 1.5.

~~3.3.8~~3.2.5 Raised Floors

Proposed Design. In addition to the total conditioned floor area and total conditioned slab floor area (see 3.1.1), ~~ACM~~ACM ~~s must allow the~~ users shall ~~to~~ enter floor areas for the standard raised floor construction types listed in Table R3-3~~Table R3-2 and at least three user-defined construction types~~. The ACM ~~must~~shall require user input to ~~be able to~~ distinguish floor areas and constructions that are over crawl spaces. The U-factor for ~~ACM and its documentation must inform the user that the~~ floor constructions and areas ~~must~~shall be consistent with the actual building design. U-factors shall be those from ACM Joint Appendix IV. ~~.~~

~~The effect of a conventional crawl space is approximated with a thermal resistance of R-6; however, for controlled ventilation crawl spaces (an optional capability), the crawl space is modeled as a separate thermal zone and R-6 is not assumed. The R-6 value for a conventional crawlspace shall be automatically calculated by the ACM and shall not be allowed as a user input.~~

Standard Design. The floor areas of the *Standard Design* are equal to the areas of the *Proposed Design*. The ~~exposed~~ raised floor ~~U-value~~U-factor ~~used in~~ for the *Standard Design* is taken from Table R3-3 and depends

~~independent of the proposed construction assembly. It does vary, however, depending~~ on whether or not the floor assembly in the *Proposed Design* is located over a crawl space. For this reason, t~~T~~he ACM ~~must~~shall keep track of which raised floor surfaces are over crawl spaces and which are not.

~~***Proposed Design & Standard Design.*** The effect of a crawl space is approximated with a thermal resistance of R-6 and this is accounted for in the *Standard Design* U-value in Table R3-2. Raised floors in the *Proposed Design* that are not located over a crawl space shall not include the R-6 thermal resistance used for floors over a crawl space.~~

Notes. The effect of a conventional crawl space is modeled with a thermal resistance of R-6; however, for controlled ventilation crawl spaces (an optional capability), the crawl space is modeled as a separate thermal zone and R-6 is not assumed. The R-6 value for a conventional crawlspace shall be automatically calculated by the ACM and shall not be allowed as a user input. The U-factors in Table R3-3 account for the additional R-6.

Table R3-3 – Floor U-factors for the Standard Design

Floor Type	Package D Criteria	U-factor	ACM Joint Appendix IV Reference
Raised Floor (crawl space)	R-19	0.037	~~IV18-A4~~IV20-A4
Raised Floor (no crawl space)	R-19	0.048	~~IV19-A4~~ IV21-A4

~~3.3.9~~3.2.6 Slab-on-Grade Perimeter

Proposed Design. The ACM ~~must~~shall allow users to enter at least two different slab perimeter constructions and their corresponding lengths. Typically, ACMs have no practical limit on the number of slab perimeter constructions that may be entered. The default condition for the *Proposed Design* is ~~ACMs must assume~~ that 80% of any slab edge length entered is adjacent to rug-covered (R-2 for carpet and pad) slab and 20% is adjacent to exposed slab on the conditioned side. F-factors for slab loss shall be taken from Table R3-4 or be calculated using methods consistent with ACM Joint Appendix IV and accurately represent the conditions in the actual building. ~~and determine an overall F2 factor for the total length or specify that the user enter or choose such a weighted F2 factor.~~ The ACM ~~must~~shall be able to determine the amount of slab edge adjacent to unconditioned spaces separately from the slab edge adjacent to the outside ~~so that the ACM can determine the appropriate *Standard Design*~~. In the *Proposed Design*, the F~~2~~ factor(s) may account for slab perimeter insulation for both slab edges exposed to the outside and slab edges adjacent to unconditioned spaces such as garages. In climate zone 16, ~~S~~slab edges adjacent to garages and unconditioned spaces may be considered to be insulated with R-7 insulation and have an ~~F~~F-~~2~~ factor of 0.51.

Standard Design. The total slab perimeter length in the *Standard Design* is the same as in the *Proposed Design*. For the *Standard Design,* the slab edge ~~heat loss~~ F-factor, ~~F2,~~ is 0.76 for all climate zones except Climate Zone 16 where the ~~F~~F-factor~~2~~ is 0.51. See Package D. For the *Standard Design* unconditioned spaces such as the garage are assumed to be detached. ~~, hence the slab perimeter between conditioned spaces and unconditioned spaces such as garages is assumed to meet the Alternative Component Package D requirements in Section 151 of the building efficiency standards and is assumed to be exposed to the outside conditions. See Section 4.7.1 for details.~~

Table R3-4 – Slab Edge F-factors for the Standard Design

Slab Edge Condition	Package D Criteria	F-factor	ACM Joint Appendix IV Reference
No Insulation	None	0.73	IV25-A1
R-7 Insulation	R-7	0.56	IV25-C7

3.3 Fenestration and Doors

3.3.10 3.3.1 Doors

Proposed Design. ACMs must shall allow users to enter at least two different door construction types, their U-factors, areas, and orientations. These door types must include the standard door type specified in Table R3-2 plus at least one user-defined door type with an ACM specified name or designator. Door U-factors shall accurately represent the doors installed in the building and be calculated in a manner consistent with ACM Joint Appendix IV.

For the user-defined door type, the ACM must at least allow the user to enter the area, the orientation, and the U-value or R-value of the door.

Standard Design. The *Standard Design* has 40 square feet of door area for each dwelling unit. All doors are assumed to face north and have a U-factor of 0.330.50 from Joint Appendix IV reference IV28-A3. This means that tThe net opaque wall area facing north is reduced by 40 ft^2ft² for each dwelling unit for the *Standard Design* run.

3.3.11 3.3.2 Fenestration Types and Areas

Proposed Design. ACMs must shall allow users to select enter fenestration or window types, specify the U-factor, SHGC, area, orientation, and tilt. Performance data (U-factors and SHGC) shall be NFRC values or taken from from the CEC default tables. in the standards or from several user-defined fenestration types where the user must enter the *Number of Fenestration Assemblies*, the *U-value* and *Solar Heat Gain Coefficient (SHGC)* for any user-defined window type. For each user-defined fenestration type the ACM must require the user to enter the Fenestration Area, tilt and orientation.

Standard Design. Fenestration area in the Standard Design is determined by the package D specification for the appropriate climate zone. If package D for the climate zone permits 20% of the conditioned floor area in glass, then the Standard Design has a fenestration area equal to 5% of the conditioned floor area facing in the direction of each major compass point. If package D for the climate zone permits 16% of the conditioned floor area in glass, then the Standard Design has a fenestration area equal to 4% of the conditioned floor area facing in the direction of each major compass point. If the *Proposed Design* fenestration area is less than 20%, the *Standard Design* fenestration area is set equal to the *Proposed Design* fenestration area. Otherwise, the *Standard Design* fenestration area is set equal to 20% of the conditioned floor area. The *Standard Design* fenestration area is distributed equally between the four main compass points—North, East, South and West. There is no skylight area in tThe *Standard Design* runhas no skylights. The net wall area on each orientation is reduced by the fenestration area (and door area) on each facade. The U-factor and SHGC performance factors for the *Standard Design* are taken from the Package D specification.

3.3.12 3.3.3 Overhangs and Sidefins

Proposed Design. ACMs must shall allow users to enter a set of basic generic parameters for a description of an overhang and sidefinfor each individual fenestration or window area entry. The basic parameters mustshall include *Fenestration Height, Fenestration Width, Overhang/Sidefin Length, and Overhang/Sidefin Height.* ACM user entries for overhangs may also include *Fenestration Width, Overhang Left Extension* and *Overhang Right Extension.* ACM user entries for sidefins may also include *Fin Left Extension* and *Fin Right Extension* for both left and right fins. (See Sections 2.2.9 and 2.2.10.)

Standard Design. The *Standard Design* does not have overhangs.

Envelope Heat Loss Factors

Heat loss factors include U-values for ceilings/roofs, walls, floors, windows and doors. For the slab edges of slabs-on-grade the heat loss factor is expressed as an F2 factor

~~***Proposed Design.*** Except for user-defined walls, ACMs must automatically assign heat loss factors based on the user's selection of one of the standard building elements from the approved lists of standard building elements.~~

~~ACM vendors should note that user entered U-values are developed with an outside air film resistance of 0.17 based on a 15 mph wind speed. The vendors may internally adjust the U-value in the simulation for average wind conditions (3 mph wind) by assuming an outside air film resistance of 0.38 or they may strip off the fixed outside air film R-value of 0.17 and calculate an hourly R-value for the outside air film coefficient based on the wind speed and surface roughness.~~

~~***Standard Design.*** Heat loss factors in the *Standard Design* are determined by the Package D specification. They are independent of the construction assembly in the proposed building. The heat loss factors used in the *Standard Design* are given in the table below. The *Standard Design* U-values for roof/ceilings and walls depends only on the package specification and is independent of the actual construction assembly proposed. The standard design U-values include an external air film with an R-value of 0.17 based on a 15 mile per hour wind speed. The adjustment to this air film for the standard design shall be the same as that used for the proposed design.~~

~~For slab edges, the heat loss factor (F2 factor) is one of two fixed values in the *Standard Design* run. For climate zones with no slab edge insulation requirement and slab edges adjacent to unconditioned spaces F2 is 0.76 and for slab edges required to be insulated it is 0.51. For the climate zone package(s) that require slab edge insulation (Climate Zone 16), the slab edge for the *Standard Design* has insulation on the total perimeter length and has an F2 factor of 0.51.~~

~~The door U-value is fixed at 0.330 Btu/(hr-ft^2-°F) in the *Standard Design* run.~~

~~***Design. Design.***~~

~~*Table R3-2 - Basecase Heat Loss Factors*~~

~~Building Component~~	~~Package Specification or Mandatory Minimum~~	~~U-value~~
~~Roof~~	~~R-19~~	~~0.051~~
	~~R-30~~	~~0.034~~
	~~R-38~~	~~0.028~~
~~Wall~~	~~R-13~~	~~0.088~~
	~~R-19~~	~~0.065~~
	~~R-21~~	~~0.059~~
~~Raised Concrete Floor~~	~~R-0~~	
	~~R-4~~	
	~~R-8~~	
~~Raised Floor (crawl space)~~	~~R-19~~	~~0.037~~
~~Raised Floor (no crawl space)~~	~~R-19~~	~~0.049~~
~~Fenestration~~	~~U = 0.75~~	~~0.75~~
	~~U = 0.65~~	~~0.65~~
	~~U = 0.60~~	~~0.60~~
~~Doors~~	~~na.~~	~~0.330~~
		~~F2 Factor[1]~~
~~Slab Edge~~	~~None~~	~~0.76~~
	~~R-7~~	~~0.51~~

~~[1] The F2 Factor is determined based on the required assumption that 80% of the slab edge is adjacent to rug-covered slab and 20% is adjacent to exposed slab.~~

~~3.~~3.3.4 Solar Heat Gain Coefficients

Proposed Design. ACMs ~~must~~shall require the user to enter the fenestration Solar Heat Gain Coefficient for each window, skylight, or other fenestration system type~~ with a separate area~~. This requirement may be met by having the user select from a ~~standard~~ default list of fenestration systems ~~and sizes~~ or by direct entry ~~for user-defined~~using NFRC-certified values for windows, doors with glass or skylights. In addition, for each ~~window, skylight and~~ fenestration element the ACM ~~must~~shall ~~require~~ allow the user to select an exterior shading treatment from the lists given in Table R3-7. The ACM will then determine the overall SHGC for the complete fenestration system based on the fenestration SHGC and the SHGCs assigned to the Commission-approved exterior shading devices and assigned interior shading devices from and Table R3-7~~Table R3-4~~.

Standard Design. The *Standard Design* fenestration Solar Heat Gain Coefficients (SHGCs) are determined by the appropriate Package D specifications for the applicable climate zone. Note that the frame type and the presence or absence of muntins or dividers is irrelevant for the *Standard Design* as the Package D values for $SHGC_{fen}$ and the U-factor include the effects of fenestration features such as framing, dividers, and muntins.

~~3.~~43.3.5 Interior Shading Devices ~~and their Solar Heat Gain Coefficients~~

Internally, ACMs shall use two values to calculate solar heat gain through windows: $SHGC_{open}$ and $SHGC_{closed}$. $SHGC_{open}$ ~~$SHGC_{open}$~~ is the total solar heat gain coefficient of the fenestration and its exterior shading device when the operable interior shading device is open. $SHGC_{closed}$ ~~$SHGC_{closed}$~~ is the total solar heat gain coefficient when the interior shading device is closed. $SHGC_{open}$ ~~$SHGC_{open}$~~ is the setting that applies when the air conditioner is not operating, which typically is most of the 24-hour period, while $SHGC_{closed}$ ~~$SHGC_{closed}$~~ applies only for periods when the air conditioner operates. The *Standard Design* values for these SHGCs are shown in Table R3-6 below. $SHGC_{open}$ ~~$SHGC_{open}$~~ and $SHGC_{closed}$ ~~$SHGC_{closed}$~~ are not user specified inputs. See Chapter 4 for more details.

The ACM ~~must~~shall require the user to directly or indirectly specify $SHGC_{fen}$ and frame type. The ACM ~~must~~shall assign an interior shading device as listed in and require the user to specify exterior shading device as listed in Table R3-7~~Table R3-4~~. The ACMs ~~must~~shall calculate the overall SHGC for the fenestration with shading devices as shown in Chapter 4.

For both the *Proposed Design* and the *Standard Design,* all windows are assumed to have draperies and skylights are assumed to have no interior shading. ~~The ACM Compliance Supplement must also explicitly indicate that the ACM automatically gives credit for draperies for all windows and that credit is allowed only for one exterior shading device.~~

Table R3-5 – Allowed Interior Shading Devices and Recommended Descriptors

Recommended Descriptor	Interior Shading Attachment Reference	Solar Heat Gain Coefficient
Standard	Draperies or No Special Interior Shading - Default Interior Shade	0.68 (see Note 1)
None (see Note 2)	No Interior Shading - Only for Skylights (Fenestration tilt <60 degrees)	1.00

Note (general): No other interior shading devices or attachments are allowed credit for compliance with the building efficiency standards.

Note 1: Standard shading shall be assumed for all fenestration with a tilt of 60 degrees or greater from horizontal.

Note 2: *None* is the default interior shading device in the standard and proposed design for fenestration tilted less than 60 degrees from horizontal (skylights) and is only allowed for fenestration tilted less than 60 degrees from horizontal (skylights), i.e. *None* is not an interior shading option for ordinary vertical windows

Table R3-6 – Standard Design *Shading Conditions*

	Package Specification	
Characteristic	$SHGC_{fen}$ = NR	$SHGC_{fen}$ = 0.37
$SHGC_{fen}$	0.67	0.37
$SHGC_{open}$	0.649	0.358
$SHGC_{closed}$	0.614	0.339
Glazing	Double Clear	Double Low Solar Low E
Interior Shade	Drapes (*Standard*)	Drapes (*Standard*)
$SHGC_{int}$	0.68	0.68
Exterior Shade	Bugscreen (*Standard*)	BugScreen (*Standard*)
$SHGC_{ext}$	0.76	0.76

3.3.6 Exterior Shading Devices

Proposed Design. The ACM ~~must~~shall require the user to either accept the default exterior shading device or select from a specific Commission-approved list of exterior shading devices for each fenestration element. ~~The interior shading device is *Standard* (0.68 SHGC) for windows and *None* (1.0 SHGC) for skylights.~~ The default choice for exterior shading device is *Standard,* which is assigned an average SHGC of 0.76. The ACM Compliance Supplement shall explicitly indicate that credit is allowed only for one exterior shading device. See Table R3-7 for other choices.

Standard Design. The *Standard Design* shall assume the default exterior shading, which is the standard bug screen. ~~ACM uses the default values for interior and exterior shading devices for the *Standard Design* based on *Standard* for windows and *None* for skylights from Table R3-3 and Table R3-4.~~

~~*Table R3-3 - Allowed Interior Shading Devices and Recommended Descriptors*~~

~~Recommended Descriptor~~	~~Interior Shading Attachment Reference~~	~~Solar Heat Gain Coefficient~~
~~Standard~~	~~Draperies or No Special Interior Shading - Default Interior Shade~~	~~0.68 1~~
~~None 2~~	~~No Interior Shading - Only for Skylights (Fenestration tilt <60 degrees)~~	~~1.00~~

~~Note (general): No other interior shading devices or attachments are allowed credit for compliance with the building efficiency standards.~~

~~Note 1: Standard shading shall be assumed for all fenestration with a tilt of 60 degrees or greater from horizontal.~~

~~Note 2: *None* is the default interior shading device in the standard and proposed design for fenestration tilted less than 60 degrees from horizontal (skylights) and is only allowed for fenestration tilted less than 60 degrees from horizontal (skylights), i.e. *None* is not an interior shading option for ordinary vertical windows.~~

Table R3-7 – Allowed Exterior Shading Devices and Recommended Descriptors

~~Table R3-4 - Allowed Exterior Shading Devices and Recommended Descriptors~~

Recommended Descriptor	Exterior Shading Device Reference	Solar Heat Gain Coefficient
Standard	Bug Screen or No Shading ~~- Default Bugscreens are modeled~~	0.76
WvnScrn	Woven SunScreen (SC<0.35)	0.30
LvrScrn	Louvered Sunscreen	0.27
LSASnScrn	LSA Sunscreen	0.13
RlDwnAwng	Roll-down Awning	0.13
RlDwnBlnds	Roll -down Blinds or Slats	0.13
None (see Note 1)	For skylights only - No exterior shading	1.00

Note 1: None is the default for fenestration tilted less than 60 degrees from horizontal (skylights) and is only allowed for fenestration tilted less than 60 degrees from horizontal (skylights)., i.e. None is not an exterior shading option for ordinary vertical windows.

~~*Table R3-5 - Standard Design Shading Conditions*~~

	~~Package Specification~~	
~~Characteristic~~	~~$SHGC_{fen}$ = NR~~	~~$SHGC_{fen}$ = 0.40~~
~~$SHGC_{fen}$~~	~~0.70~~	~~0.40~~
~~$SHGC_{open}$~~	~~0.68~~	~~0.39~~
~~$SHGC_{closed}$~~	~~0.63~~	~~0.37~~
~~Glazing~~	~~Double Clear~~	~~Double Clear~~
~~$SHGC_{fen+int}$~~	~~0.647~~	~~0.378~~
~~Interior Shade~~	~~Drapes (*Standard*)~~	~~Drapes (*Standard*)~~
~~$SHGC_{int}$~~	~~0.68~~	~~0.68~~
~~Exterior Shade~~	~~Bugscreen (*Standard*)~~	~~BugScreen (*Standard*)~~
~~$SHGC_{ext}$~~	~~0.76~~	~~0.76~~

~~3.~~3.4 Thermal Mass

~~The performance approach is based on p~~Prescriptive Package D, the basis of the *Standard Design*, ~~of the efficiency standards, which~~ has no thermal mass requirements. Package D and the performance approach assume that both the *Proposed Design* and *Standard Design* building have a minimum mass as a function of the conditioned area of slab floor and non-slab floor.

Proposed Design. The ACM may require the user to identify whether or not the *Proposed Design* will be modeled with the same thermal mass as the Standard design unless the Proposed Design is a high mass building as defined below. that exceeds the specified mass threshold. Unless the *Proposed Design* has thermal mass that exceeds a thermal mass minimum threshold, the ACM shall model thermal mass for *the Proposed Design* the same as the *Standard Design*.

Standard Design. The conditioned slab floor in ACM shall model the *Standard Design* is assumed to be as 20% percent of the *Proposed Design*'s conditioned slab floor area as exposed slab and , 80% slab of the conditioned slab covered by carpet or casework. The non-slab floor in the *Standard Design* is assumed to be floor area as rug-covered slab, and 5% of the *Proposed Design*'s nonslab floor area as exposed 2 with two inch thick concrete with the remainder low-mass wood construction. No other mass elements are modeled in the *Standard Design*. The *Standard Design* mass is modeled with the following characteristics.

- The conditioned slab floor area (slab area) shall have be modeled as 20 percent exposed thermal mass having a thickness of 3.5 inches, ; a volumetric heat capacity of 28 Btu/ft^3-°F, ; a conductivity of 0.98 Btu-in/hr-ft^2-°F. The exposed portion shall have , and a surface conductance of 1.3 Btu/hr-ft^2-°F (no thermal resistance on the surface) and the covered portion. The remaining 80% of the conditioned slab floor area shall be modeled as covered thermal mass with the same characteristics as the exposed mass, but with the addition of shall have a surface R-value conductance of 2.0 Btu/hr-ft^2-°F, typical of a carpet and pad.
- The "exposed" portion of the cGonditioned non-slab floor area shall have a thickness of 2.0 inches; a volumetric heat capacity of 28 Btu/ft^3-°°F; a conductivity of 0.98 Btu-in/hr-ft^2-°°F; and a surface conductance of 1.3 Btu/hr-ft^2-°F (no added thermal resistance on the surface). These thermal mass properties apply to the "exposed" portion of non-slab floors for both the *Proposed Design* and *Standard Design*. The covered portion of non-slab floors is assumed to have no thermal mass. be modeled with 5% of the nonslab floor area as exposed thermal mass. This thermal mass is modeled in both the *Proposed Design* and *Standard Design* with a thickness of 2.0 inches, a volumetric heat capacity of 28 Btu/ft^3 -°F, a conductivity of 0.98 Btu-in/hr-ft^2 -°F, a surface conductance of 1.3 Btu/hr-ft^2 -°F (no added thermal resistance on the surface).

3.6High Mass Threshold

Proposed DesignDefinition of High Mass Building. The ACM may only allow the user to model aAdditional thermal mass in the proposed design may only be modeled when the equivalent thermal mass for the *Proposed Design* is a high mass building. A high mass building has mass equivalent to 30% of the conditioned slab floor area being exposed slab and 70% slab covered by carpet or casework, and 15% of the conditioned non-slab floor area being exposed with two inch thick concrete with the remainder low-mass wood construction. ACMs may let users reaches a specific mass threshold. The ACM may require that a user indicate a high mass design before entering the user is allowed to enter additional mass elements for the proposed design, or ACMs can let users enter mass elements, but only consider them in the proposed design if the building qualifies as a high mass building. and mass characteristics other than what is assumed for the *Standard Design*. The high mass threshold is determined by an amount of mass equivalent to 30% of the conditioned slab floor area as exposed slab, 70% of the conditioned slab floor area as rug-covered slab and 15% of the conditioned nonslab floor area as 2 inch thick exposed concrete with the same specifications as those given in the Thermal Mass section above. Thermal mass equivalency is determined through the concept of o determine the threshold, this mass is converted to a standard Interior Mass Capacity using the Unit Interior Mass Capacity (UIMC) method described in Appendix IACM RB-2005.

The thermal mass of the *Proposed Design,* other than the default mass modeled for the *Standard Design* mass is only modeled and displayed on compliance output if the *Proposed Design* qualifies as a design has more equivalent thermal mass than the high mass thresholdbuilding. The ACM may require that the user specify that the design is a high mass design before the entry of mass elements not related to the slab floor and nonslab floor defaults. For example, a *Proposed Design* with all of the conditioned floor area as slab-on-grade construction designed with 25% exposed slab is still modeled with 20% exposed slab because the designed thermal mass does not exceed the threshold. If the same house is designed with 30% of the conditioned floor area as exposed slab and 70% rug-covered slab then the permit applicant may model that amount of thermal mass in the *Proposed Design*. In addition, a *Proposed Design* may model and take credit for other forms of

~~thermal mass such as masonry fireplaces or extra thick sheetrock using the UIMC method to determine if the threshold mass is reached. Additional mass elements are not modeled in the *Standard Design*.~~

~~***Standard Design.*** The *Standard Design* thermal mass is the same as described in Section 3.6.~~

~~3.8~~3.5 Infiltration/Ventilation

The intentional or unintentional replacement of conditioned indoor air by unconditioned outdoor air creates heat gains or heat losses for a conditioned building. This exchange of indoor and outdoor air occurs for all buildings to a greater or lesser extent. Mechanical ventilation gives a certain degree of control of the rate of this exchange and depending on the balancing of the ventilation may create building pressurization.

Proposed Design. As a default, ACMs shall not require the user to enter any values related to infiltration or mechanical ventilation for air quality and shall set the infiltration level to be the same as the standard design. Specific data on infiltration may be entered ~~ACMs shall allow a user to specify~~ if ~~they~~ the building will be ~~using~~ diagnostically tested~~ing~~ during building construction or if ~~they wish to take infiltration reduction credit for a~~a qualifying ~~n~~ air-retarding wrap is specified.

Air Retarding Wrap. ~~or reduced duct leakage.~~ An air retarding wrap can qualify for a default reduction in Specific Leakage Area (SLA) of 0.50 without confirmation by diagnostic testing. The air retarding wrap ~~must~~shall be tested and labeled by the manufacturer to comply with ASTM E1677-95, *Standard Specification for an Air Retarder (AR) Material or system for Low-Rise Framed Building Walls* and have a minimum perm rating of 10. The air-retarding wrap ~~must~~shall be installed per the manufacturer's specifications that ~~must~~shall be provided to comply with ASTM E1677-95 (2000). The air retarding wrap specifications listed above shall also be reported in the *Special Features and Modeling Assumptions* listings when an air retarder is modeled by the ACM.

Reduced Infiltration due to Duct Sealing. The default infiltration (no diagnostic testing and measurement of infiltration) credit for reduced duct leakage is also an SLA reduction of 0.50. The ACM shall automatically apply this credit when the *Proposed Design* has sealed and tested ducts. The use of this SLA reduction credit for Low-leakage HVAC ducts shall be listed in the *Special Features and Modeling Assumptions* listings of the CF-1R.

Diagnostic Testing for Reduced Infiltration. Neither of the above ~~se~~ credits ~~may~~ shall be taken if the user chooses a diagnostic testing target for reduced infiltration. When the user chooses diagnostic testing for reduced infiltration, the diagnostic testing shall be performed using fan pressurization of the building in accordance with ASTM E 779-1987 (Reapproved 1992), *Standard Test Method for Determining Air Leakage Rate by Fan Pressurization* and the equipment used for this test shall meet the instrumentation specifications found in ACM RF. The specifications for diagnostic testing and the target values specified above shall be reported in the *Field Verification and Diagnostic Testing* listings on the CF-1R.

~~Either of these prescriptive infiltration reduction credits are special features and must be listed in the *Special Features and Modeling Assumptions* listings of the CF-1R and C-2R. The air retarder specifications listed above must also be reported in the *Special Features and Modeling Assumptions* listings when an air retarder is modeled by the ACM.~~ If the user specifies they will be using diagnostic testing during construction, for either reduced infiltration or reduced infiltration with mechanical ventilation, the ACM ~~must~~shall require the user to ~~choose an input menu to~~ enter a target value for measured $CFM50_H$ or the SLA corresponding to the target $CFM50_H$, and, if mechanical ventilation is to be used, the wattage and cfm of the ventilation supply and exhaust fans. Note that when the *Proposed Design* target value for reduced infiltration falls below a value corresponding to an SLA of 3.0, mechanical ventilation is required and this requirement ~~must~~shall be reported as described in Chapter 2. Whenever mechanical ventilation is modeled (required or not), the volumetric capacity modeled ~~must~~shall be at least 0.047 cfm/ft^2 of conditioned floor area. This minimum capacity is needed to provide adequate ventilation for indoor air quality. If the user attempts to model total mechanical volumetric capacity (balanced + unbalanced) less than 0.047 cfm/ft^2, then the ACM ~~must~~shall indicate an input error and automatically block compliance output.

Tested infiltration below a value corresponding to an SLA of 1.5 is not allowed unless mechanical *supply* ventilation is installed adequate to maintain the residence at a pressure greater than -5 pascals relative to the

outside average air pressure with other continuous ventilation fans operating. ~~When the user chooses diagnostic testing, the diagnostic testing shall be performed using fan pressurization of the building in accordance with ASTM E 779-1987 (Reapproved 1992), *Standard Test Method for Determining Air Leakage Rate by Fan Pressurization* and the equipment used for this test must meet the instrumentation specifications found in Section 4.1 of Appendix F. The specifications for diagnostic testing and the target values specified above must be reported in the *HERS Required Verification* listings on the CF-1R and C-2R as described in Chapter 2.~~

Standard Design. The *Standard Design* does not use mechanical ventilation and assumes infiltration corresponding to a Specific Leakage Area (SLA) of 4.9 for ducted HVAC systems and an SLA of 3.8 for non-ducted HVAC systems. See Chapter 4

~~Refer to Sections 4.17 and 4.17.1~~ for more detailed information.

3.5.1 Free Ventilation Area

Proposed Design: Free ventilation area for the proposed design is calculated by the ACM based on the types and areas of windows specified in the *Proposed Design*. The free ventilation area is modeled as 20% of the fenestration area for hinged type windows such as casements, awnings, hoppers, patio doors and French doors that are capable of a maximum ventilation area of approximately 80% of the rough frame opening. If the ACM user increases the ventilation area for hinged type windows, the ACM shall also consider the possible effect of fixed glazing in the building which has no free ventilation area (window opening type *Fixed*). The ACM user may account for additional free ventilation area by entering the total area for sliding windows, the total area for hinged windows, and the total area of fixed windows. The ACM shall verify that the total area entered for these three types is the same as the total area of windows calculated elsewhere or the ACM may determine the area of fixed windows by subtracting the slider window area and the hinged window area from the total window area if it is less than the total window and skylight area. If the total window and skylight area is less than the area specified for sliding windows and hinged windows the ACM shall reduce the area of hinged windows by the difference. The total ventilation area is calculated from the areas of the three possible fenestration opening types, as shown below:

Equation R3-1 $$Vent_{Area} = (Area_{Slider} \times 0.1) + (Area_{Hinged} \times 0.2) + (Area_{Fixed} \times 0.0)$$

The ACM's ability to accept a customized ventilation area is an optional capability. When this optional capability is used, the fact that the user entered a customized free ventilation area and the total areas of each of these three fenestration opening types shall be reported in the *Special Features and Modeling Assumptions* listings on the CF-1R. Note that the maximum free ventilation area that may be modeled by any ACM for compliance purposes is 20% of the total area of windows and skylights assuming that all windows and skylights are hinged.

Free ventilation area is the adjusted area taking into account bug screens, window framing and dividers, and other factors.

Standard Design: The *Standard Design* value for free ventilation area is 10% of the fenestration area (rough frame opening). This value assumes that all windows are opening type *Slider*. The approved ACM compliance manual shall note that fenestration-opening type *Slider* also may be selected by the user or automatically used by the ACM as a default or "*Standard*" opening type.

3.5.2 Ventilation Height Difference

Proposed Design: The default assumption for the *Proposed Design* is 2 ft for one story buildings and 8 ft for two or more stories. Greater height differences may be used with special ventilation features such as high, operable clerestory windows. In this case, the height difference entered by the user is the height between the average center height of the lower operable windows and the average center height of the upper operable windows. Such features shall be fully documented on the building plans and noted in the *Special Features and Modeling Assumptions* listings of the CF-1R.

Standard Design: The *Standard Design* modeling assumptions for the elevation difference between the inlet and the outlet is two feet for one story buildings and eight feet for two or more stories.

~~3.7~~3.6 Heating and Cooling System

3.6.1 System Type

Proposed Design. ACMs ~~must~~shall require the user to enter simple heating and cooling seasonal efficiencies that ~~are used to~~ characterize basic package single zone HVAC systems used to heat and/or cool the modeled building. ACMs ~~must~~shall be able to distinguish what fuel is being used to heat the building and what fuel is used to cool the dwelling. This may be based on direct user input or indirectly determined from the user's selection of HVAC equipment types. ACMs ~~must~~shall require the user to enter the type of distribution system that is used in the proposed design.

For building using more than one system type, equipment type or fuel type, and the types do not serve the same floor area, the user shall either zone the building or enter the floor area served by each type. The ACM shall weight the load to each type by zone or floor area.

For floor areas served by more than one heating system, equipment, or fuel type, the user of the program shall specify which system, equipment, and fuel type satisfies the heating loads.

For floor areas served by more than one cooling system, equipment, or fuel type, the user of the program shall specify which system, equipment, and fuel type satisfies the cooling loads.

Standard Design. The standard heating and cooling system for central HVAC systems is a single zone system with ducts in the attic. The standard heating and cooling system for non-central HVAC systems is an unducted system.

For buildings using more than one system, equipment, or fuel type where each conditions a different floor area within the building, the *Standard Design* shall use the weighted allocation of loads to each system, equipment, or fuel type as used for the *Proposed Design.*

For floor areas in the proposed design served by more than one system, equipment, or fuel type, loads for those floor areas shall be assumed to be satisfied in the *Standard Design* as specified in Section 3.6.3 and 3.6.4 for each system, equipment, and fuel type the user specifies in the proposed design.

3.6.2 No Cooling

Proposed Design: When the *Proposed Design* has no air conditioning system, the *Proposed Design* is required to model a split system air conditioner meeting Package D requirements. If the heating system is ducted, the location and R-value of those ducts shall be used for the cooling system. If the heating system has no ducts the cooling system ducts shall be modeled as located in the attic, insulated to Package D levels. Since the Standard Design has these same features, there is no penalty or credit related to the lack of ducts.

Standard Design: The *Standard Design* has a split system air conditioning system meeting the Package D requirements and with air distribution ducts located in the attic. The *Proposed Design* is assumed to have the same features so there is no penalty or credit.

~~3.7.1~~3.6.3 Heating Equipment

Proposed Design. ACMs ~~must~~shall be able to model the basic types of heating equipment and the efficiency metrics listed in the Appliance Efficiency Regulations ~~for Gas Fired Wall Furnaces, Floor Furnaces and Room Heaters~~, except for combined hydronic space and water heating systems, which is an optional modeling capability. ACMs ~~must~~shall require the user to enter the basic information to model the energy use of these pieces of equipment. At ~~the~~ a minimum this includes some type of seasonal efficiency for heating and information on whether or not the HVAC system has ducts and the performance characteristics of those ducts. ~~When using a~~ With gas heating systems, the ACM ~~must~~shall require the user to identify if the gas heating

system is ducted or non-ducted. The gas heating system type shall also be identified: ~~and if it is a~~ central gas furnace~~;~~ ~~or gas heat pump system,~~ or ~~a~~ non-central gas furnace system. If the system is a non-ducted non-central gas furnace system, the ACM ~~must~~shall require the user to select the type and size of the equipment from ~~Table 3-5~~ the Appliance Efficiency Regulations for Gas Fired Wall Furnaces, Floor Furnaces and Room Heaters, where the system size, as a default, may be determined as 34 Btu/hour per square foot of conditioned floor area. ~~For central ducted systems the ACM Proposed Design shall use Equation 3.2 for gas furnaces, 3.4h for gas heat pumps, and 3.3 for electric heat pumps and electric resistance furnaces~~

~~*Table R3-8 – Non-Ducted Non-Central Heating Equipment Default Efficiencies*~~

~~*Gas Fired Wall Furnaces, Floor Furnaces and Room Heaters*~~

~~**Location**~~	~~**Type**~~	~~**Size**~~	~~**Seasonal Efficiency**~~
~~Wall~~	~~Fan Type~~	~~up to 42,000 Btu/hour~~	~~73%~~
		~~over 42,000 Btu/hour~~	~~74%~~
	~~Gravity Type~~	~~up to 10,000 Btu/hour~~	~~59%~~
		~~over 10,000 Btu/hour up to 12,000 Btu/hour~~	~~60%~~
		~~over 12,000 Btu/hour up to 15,000 Btu/hour~~	~~61%~~
		~~over 15,000 Btu/hour up to 19,000 Btu/hour~~	~~62%~~
		~~over 19,000 Btu/hour up to 27,000 Btu/hour~~	~~63%~~
		~~over 27,000 Btu/hour up to 46,000 Btu/hour~~	~~64%~~
		~~over 46,000 Btu/hour~~	~~65%~~
~~Floor~~	~~Gravity Type~~	~~up to 37,000 Btu/hour~~	~~56%~~
		~~over 37,000 Btu/hour~~	~~57%~~
~~Room~~	~~Gravity Type~~	~~up to 18,000 Btu/hour~~	~~57%~~
		~~over 18,000 Btu/hour up to 20,000 Btu/hour~~	~~58%~~
		~~over 20,000 Btu/hour up to 27,000 Btu/hour~~	~~63%~~
		~~over 27,000 Btu/hour up to 46,000 Btu/hour~~	~~64%~~
		~~over 46,000 Btu/hour~~	~~65%~~

Standard Design. When electricity is used for heating, the heating equipment for the *Standard Design* shall be an electric split system heat pump with a Heating Seasonal Performance Factor (HSPF) ~~of 6.8~~, meeting the Appliance Efficiency Regulations requirements for split systems. However, ~~except~~ when the *Proposed Design~~s~~* uses a single package heat pump ~~only~~, the *Standard Design* shall have a heat pump with ~~assume~~ an HSPF ~~of 6.6~~ meeting the Appliance Efficiency Regulations requirements for single package equipment. When a *Proposed Design* uses both a single package ~~split system~~ heat pump and another type of ~~heat pump~~ electric heat, the *Standard Design* HSPF shall be a conditioned floor area weighted average of the minimum single package ~~s~~HSPF for the floor area conditioned by single package equipment and the minimum split system HSPF for the remaining floor area ~~of the heating equipment~~. When electricity is not used for heating, the equipment used in the *Standard Design* building shall be either a gas furnace with an Annual Fuel Utilization Efficiency (AFUE) meeting the Appliance Efficiency Regulations minimum efficiency ~~of 0.78~~ for central systems, or shall be a gas furnace of the type specified in the proposed design at the efficiency level shown in ~~Table 3-5~~ the Appliance Efficiency Regulations for Gas Fired Wall Furnaces, Floor Furnaces and Room Heaters~~non-central systems~~. When a *Proposed Design* uses both a nonelectric central system and another type of nonelectric system, the *Standard Design* efficiency shall be a conditioned floor area weighted average of the efficiencies of the heating equipment.

Note: Minimum efficiencies for heat pumps change effective January 23, 2006 (see Table C-2 of the Appliance Efficiency Regulations). The *Standard Design* shall use those new efficiencies after that date. ~~If the *Proposed Design* has both electric and fossil-fuel-fired heating equipment types, the standard system shall be based on the floor area weighted Source Seasonal Efficiency (SSE). In calculating the weighted average SSE, the efficiencies of all heating equipment and distribution systems are converted to source seasonal efficiencies (SSE), as shown in Equations 3.2 and 3.3.~~

~~Seasonal air distribution efficiencies ($\eta_{dist,\ seasonal}$) for the *Proposed Design* and the *Standard Design* shall be calculated using the procedures and algorithms in Appendix F, and Equation 3.1. The seasonal distribution efficiencies for the *Standard Design* shall be calculated using the defaults specified in Appendix F. The seasonal distribution system efficiency shall be calculated using the seasonal delivery effectiveness ($DE_{seasonal}$), the equipment efficiency factor (F_{equip}), and the thermal recovery factor (F_{recov})~~

$$\eta_{dist,seasonal} = 0.98 \times DE_{seasonal} \times F_{equip} \times F_{recov}$$

~~Equation 3.1~~

$$SSE_{\text{gas with fan}} = \left(\frac{1 + (0.005 \times 3.413)}{\frac{1}{AFUE} + (0.005 \times 10.239)} \right) \times \eta_{dist,seasonal}$$

~~Equation 3.2~~

$$SSE_{electric} = \left(\frac{HSPF}{10.239} \right) \times \eta_{dist,\ seasonal}$$

~~Equation 3.3~~

$$SSE_{\text{GasHeatPump,Heating}} = \frac{\eta_{dist,seasonal}}{\left[\frac{1}{COP_{heatinggas}} + \frac{3}{COP_{heatingelectric}} \right]}$$

~~Equation 3.4h~~

~~3.7.2~~3.6.4 Cooling Equipment

Proposed Design. ACMs ~~must~~shall be able to model the basic types of cooling equipment and the efficiency metrics listed in Table R2-2~~Table R 2-3~~. ACMs ~~must~~shall require the user to enter the basic information to model the energy use of these pieces of equipment. At the minimum this includes some type of seasonal distribution system efficiency for cooling, identification of whether the cooling system is ducted or non-ducted and whether it is central or non-central and the type of equipment as identified in the Appliance Efficiency Regulations. If the cooling system is non-ducted, non-central, the ACM ~~must~~shall require the user to select the type and size of the equipment from the Appliance Efficiency Regulations for Room Air Conditioners, Room Air Conditioning Heat Pumps, Package Terminal Air Conditioners and Package Terminal Heat Pumps~~those shown in Table 3-6Table R3-9~~. ~~The efficiencies of all electric cooling equipment and distribution systems are converted to source seasonal energy efficiency ratios (SSEER), as shown in Equations 3.2c and 3.3c. The efficiencies of all gas cooling equipment and distribution systems are converted to source seasonal efficiency as shown in Equations 3.4c. Packaged air conditioning systems (PkgAirCond, LrgPkgAirCond, PkgHeatPump or LrgPkgHeatPump) shall be noted in the Special Features and Modeling Assumptions listings.~~

~~*Table R3-9 – Non-Ducted Non-Central Cooling Equipment Default Efficiencies*~~

~~Room Air Conditioner Type~~			
~~Reverse Cycle~~	~~Side Louvers~~	~~Cooling Capacity~~	~~Energy Efficiency Ratio~~
~~Without~~	~~With~~	~~Less than 6,000 Btu~~	~~8.0~~
		~~6,000 to 7,999 Btu~~	~~8.5~~
		~~8,000 to 13,999 Btu~~	~~9.0~~
		~~14,000 to 19,999 Btu~~	~~8.8~~
		~~20,000 and more Btu~~	~~8.2~~
	~~Without~~	~~Less than 6,000 Btu~~	~~8.0~~
		~~6,000 to 7,999 Btu~~	~~8.5~~
		~~8,000 to 13,999 Btu~~	~~8.5~~
		~~14,000 to 19,999 Btu~~	~~8.5~~
		~~20,000 and more Btu~~	~~8.2~~
~~With~~	~~With~~	~~All~~	~~8.5~~
	~~Without~~	~~All~~	~~8.0~~

Standard Design. ~~If a packaged ducted central air conditioner (*PkgAirCond* or *LrgPkgAirCond*) or ducted central packaged heat pump (*PkgHeatPump* or *LrgPkgHeatPump*) is used for the *Proposed Design*, the cooling system used in the *Standard Design* building shall be a single package air conditioner (*PkgAirCond* or *LrgPkgAirCond*) with an SEER (seasonal energy efficiency ratio) of 9.7. Otherwise,~~ ~~t~~The cooling system for the *Standard Design* building with a central system shall be of the same type identified in the Appliance Efficiency Regulations and selected for the proposed design~~a split system central air conditioner *(SplitAirCond)*~~ with a~~n~~ SEER ~~of 10.0~~meeting the Appliance Efficiency Regulations minimum requirements. For non-ducted non-central cooling equipment, the efficiencies shall be from the Appliance Efficiency Regulations for Room Air Conditioners, Room Air Conditioning Heat Pumps, Package Terminal Air Conditioners and Package Terminal Heat Pumps ~~as shown in Table R3-9~~ for the type and size in the *Proposed Design* where the size may be a user input or shall default to 24 Btu per hour per square foot of conditioned floor area~~. In the case of *NoCooling* for the *Proposed Design*, the cooling system for the *Standard Design* building shall be a split system air conditioner (*SplitAirCond*) with an SEER of 10.0~~. When a *Proposed Design* uses both a split system air conditioner and another type of air conditioner, the *Standard Design* SEER shall be a conditioned floor area weighted average of the ~~equivalent~~ SEERs of the cooling equipment.

Note: Minimum efficiencies for air conditioners and heat pumps change effective January 23, 2006 (see Table C-2 of the Appliance Efficiency Regulations). The *Standard Design* shall use those new efficiencies after that date. ~~The efficiencies of all electric cooling equipment and distribution systems are converted to source seasonal energy efficiency ratios (SSEER), as shown in Equations 3.2c and 3.3c. The efficiencies for gas cooling equipment and distribution systems are converted to source seasonal efficiency ($SSE_{GasHeatpumCooling}$) as shown in Equation 3.4c~~

~~Seasonal air distribution efficiencies ($\eta_{dist,\ seasonal}$) for the *Proposed Design* and the *Standard Design* shall be calculated using the procedures and algorithms in Appendix F. The seasonal distribution efficiencies for the *Standard Design* shall be calculated using the defaults specified in Appendix F. The seasonal distribution system efficiency shall be calculated using the seasonal delivery effectiveness ($DE_{seasonal}$), the equipment efficiency factor (F_{equip}), and the thermal recovery factor (F_{recov})~~

~~Source seasonal energy efficiency ratios for the *Standard Design* shall be calculated as shown in Equations 3.1c, 3.2c and 3.3c.~~

$$\eta_{dist,\,seasonal} = 0.98 \times DE_{seasonal} \times F_{equip} \times F_{recov}$$ ~~Equation 3.1c~~

$$SSEER_{central,\,ducted} = SEER_{temperature} \times F_{install} \times F_{TXV} \times \eta_{dist,\,seasonal}$$ ~~Equation 3.2c~~

$$SSEER_{\text{other}} = SEER \times \eta_{dist,\,seasonal}$$ Equation 3.3c

$$SSE_{\text{GasHeatPump,Cooling}} = \frac{F_{install} \times F_{TXV} \times \eta_{dist,seasonal}}{\left[\frac{1}{COP_{coolinggas}} + \frac{3}{COP_{coolingelectric}}\right]}$$ Equation 3.4c

The temperature adjusted SEER ($SEER_{temperature}$) adjusts the performance of the cooling equipment at typical outdoor air temperatures by climate zone depending on the SEER rating. For *SplitAirCond, PkgAirCond, SplitHeatPump, PkgHeatPump*, $SEER_{temperature}$ shall be interpolated from Table 3.6c. Extrapolation shall not be used with this table. Equipment with a SEER below 8 shall use the value for 8. Equipment with a SEER above 18 shall use the value for 18. For all other central ducted equipment, $SEER_{temperature}$ shall be equal to the EER rating.

3.2.1Table 3.6c – Temperature adjusted SEER ($SEER_{temperature}$) by Climate Zone

					3.2.2	3.2.3SEER					
3.2.4CZ	3.2.58	3.2.69	3.2.710	3.2.811	3.2.912	3.2.1013	3.2.1114	3.2.1215	3.2.1316	3.2.1417	3.2.1518
3.2.161	3.2.178.0	3.2.189.0	3.2.1910.	3.2.2011.	3.2.2112.	3.2.2213.	3.2.2314.	3.2.2415.	3.2.2516.	3.2.2617.	3.2.2718.
3.2.282	3.2.297.7	3.2.308.7	3.2.319.7	3.2.3210.	3.2.3311.	3.2.3412.	3.2.3512.	3.2.3613.	3.2.3714.	3.2.3815.	3.2.3915.
3.2.403	3.2.417.8	3.2.428.7	3.2.439.7	3.2.4410.	3.2.4511.	3.2.4612.	3.2.4713.	3.2.4813.	3.2.4914.	3.2.5015.	3.2.5116.
3.2.524	3.2.537.8	3.2.548.7	3.2.559.7	3.2.5610.	3.2.5711.	3.2.5812.	3.2.5913.	3.2.6013.	3.2.6114.	3.2.6215.	3.2.6316.
3.2.645	3.2.657.9	3.2.668.9	3.2.679.9	3.2.6810.	3.2.6911.	3.2.7012.	3.2.7113.	3.2.7214.	3.2.7315.	3.2.7416.	3.2.7517.
3.2.766	3.2.777.9	3.2.788.9	3.2.799.9	3.2.8010.	3.2.8111.	3.2.8212.	3.2.8313.	3.2.8414.	3.2.8515.	3.2.8616.	3.2.8717.
3.2.887	3.2.897.9	3.2.908.9	3.2.919.9	3.2.9210.	3.2.9311.	3.2.9412.	3.2.9513.	3.2.9614.	3.2.9715.	3.2.9816.	3.2.9917.
3.2.1008	3.2.1017.	3.2.1028.	3.2.1039.	3.2.1041	3.2.1051	3.2.1061	3.2.1071	3.2.1081	3.2.1091	3.2.1101	3.2.1111
3.2.1129	3.2.1137.	3.2.1148.	3.2.1159.	3.2.1161	3.2.1171	3.2.1181	3.2.1191	3.2.1201	3.2.1211	3.2.1221	3.2.1231
3.2.1241	3.2.1257.	3.2.1268.	3.2.1279.	3.2.1281	3.2.1291	3.2.1301	3.2.1311	3.2.1321	3.2.1331	3.2.1341	3.2.1351
3.2.1361	3.2.1377.	3.2.1388.	3.2.1399.	3.2.1401	3.2.1411	3.2.1421	3.2.1431	3.2.1441	3.2.1451	3.2.1461	3.2.1471
3.2.1481	3.2.1497.	3.2.1508.	3.2.1519.	3.2.1521	3.2.1531	3.2.1541	3.2.1551	3.2.1561	3.2.1571	3.2.1581	3.2.1591
3.2.1601	3.2.1617.	3.2.1628.	3.2.1639.	3.2.1641	3.2.1651	3.2.1661	3.2.1671	3.2.1681	3.2.1691	3.2.1701	3.2.1711
3.2.1721	3.2.1737.	3.2.1748.	3.2.1758.	3.2.1769.	3.2.1771	3.2.1781	3.2.1791	3.2.1801	3.2.1811	3.2.1821	3.2.1831

3.2.1891 3.2.1901 3.2.1911 3.2.1921 3.2.1931 3.2.1941 3.2.1951

3.2.1857. 3.2.1868. 3.2.1878. 3.2.1889.
3.2.1841

3.2.2001 3.2.2011 3.2.2021 3.2.2031 3.2.2041 3.2.2051 3.2.2061 3.2.2071

3.2.1977. 3.2.1988. 3.2.1999.
3.2.1961

3.2.208

The installation factor ($F_{install}$), which adjusts for typical installation practice where refrigerant charge and airflow are not at design values, shall be 0.852.

The refrigerant charge and airflow factor (F_{TXV}), which adjusts the system performance to account for the presence of a TXV, shall be 1.0 for systems without a TXV. For systems with a TXV, the refrigerant charge and airflow factor shall be 1.07 for duct systems designed according to ACCA Manual D and 1.11 for all other duct systems.

3.7.33.6.5 Refrigerant Charge or TXVand Airflow

Proposed Design. The ACM mustshall allow the user to enter a central ducted cooling system indicate if split system air conditioners or heat pumps have diagnostically tested refrigerant charge and airflow or a field verified thermostatic expansion valve (TXV)option requires either measuring charge and airflow using procedures set forth in Appendix K (for split system equipment only) or requires the presence of a thermostatic expansion valve (TXV). This applies only to split system air conditioners and heat pumps. It does not apply to package air conditioners and heat pumps. These features require field verification or diagnostic testing by the HERS rater and mustshall be reported in the *Special Features and Modeling Assumptions* and *Field Verification and Diagnostic Testing* HERS Required Verification listings on the CF-1R and C-2R.

Standard Design. Standard Design. If a split system ducted central air conditioner or heat pump (*SplitAirCond* or *SplitHeatPump*) is used for the *Proposed Design* then the cooling system used in the *Standard Design* building shall be modeled with ehave either diagnostically tested refrigerant charge or a field verified and airflow measurement or be equipped with a thermostatic expansion valve TXV if required by Package D.

Adjustments to the source seasonal energy efficiency ratio due to refrigerant charge and airflow measurement or thermostatic expansion valves are described in section 3.8.2.

3.7.43.6.6 Air Distribution Ducts and HVAC Seasonal Distribution System Efficiency for Ducted Systems

Proposed Design. ACMs shall be able to model the basic types of HVAC distributions systems and locations listed in Table R2-3. As a default, for ducted systems HVAC ducts and the air handler are located in the attic. As a default, HVAC ducts for ducted systems are assumed to exist and are located in the attic. Likewise, as a default, the air handler is assumed to be located in the attic. Proposed HVAC systems with a duct layout and design on the plans may locate the ducts in the crawlspace or a basement if the layout and design specify that all of the supply registers are located in the floor or within two feet of the floor, and show the appropriate locations for the ducts. Otherwise, the default location is the attic as shown in Table R4-11. When all of the supply registers are located in the floor or all of the supply registers are located in the ceiling, the ACM can use Table 4.1 of Appendix F to allocate the duct surface areas. If all supply registers are in at the floor, but the building has both a crawlspace and a basement, the duct location may be taken as a floor area weighted average of the duct efficiencies of a crawlspace and a basement. entries in Table 4.1 of Appendix F. If any

~~story of a building has supply registers in both the floor and more than two feet above the floor, the duct location for that story must be modeled as 100% ducts in the attic.~~ If the modeled duct location ~~for a given story~~ is not in the attic, the ACM ~~must~~shall specify that all supply registers for ~~that story of~~ the building ~~(or the whole building)~~ are located in the floor or within two feet of the floor, and this shall be noted in the *Special Features and Modeling Assumptions* listings ~~for special verification by the local enforcement agency~~of the CF-1R.

Proposed HVAC systems with a complete ~~ACCA Manual D~~duct design, including the duct layout and design on the plans, may allocate duct surface area in more detail in the ACM model but the distribution of duct surface areas by location ~~must~~shall appear on the *Field Verification and Diagnostic Testing* ~~*HERS Required Verification*~~ list of the CF-1R.~~for verification by a HERS rater.~~

~~In a similar fashion, the supply duct surface area (and the location of the ducts) of an ACCA Manual D designed duct system may be modeled explicitly in the ACM and receive energy efficiency credit. When a non-default supply duct surface area is modeled, the supply duct surface area is subject to verification by a HERS rater and must be listed on the *HERS Required Verification* listings.~~ The HERS rater ~~must~~shall ~~also~~ verify the existence of ~~the ACCA Manual D~~ duct design and layout and the general consistency of the actual HVAC distribution system with the design. The HERS rater ~~must~~shall also measure and verify adequate ~~the~~ fan flow, see Section 3.6.9. ~~and confirm that it is consistent with the ACCA Manual D design specifications.~~

The ACM shall allow users to specify if they will be using diagnostic testing of HVAC distribution efficiency of a fully-ducted system ~~by a HERS rater~~ during the construction of the building to confirm the modeling of improved HVAC distribution efficiency measures such as duct leakage. The default shall be that no diagnostic testing will be done. Duct efficiency credits may not be taken and diagnostic testing may not be done on any HVAC system that uses nonducted building cavities such as plenums or ~~a~~ platform returns, to convey conditioned air unless they are defined or constructed with sealed sheet metal or duct board. ~~.~~ Building cavities, including support platforms, may contain ducts. If the user does not select diagnostic testing, the ACM shall require users to input at least two (2) basic parameters to determine HVAC distribution efficiency: the total conditioned floor area of the building as specified above and the R-value of the duct insulation which may be defaulted to ~~R4.~~ the minimum duct insulation requirements~~2~~. Additional data may be required to determine seasonal distribution system efficiency. The default input parameters are presented in ~~Appendix F~~Chapter 4. If the user specifies diagnostic testing to be performed during construction, the ACM shall ~~request~~ prompt the user to enter the data described ~~in Section 4.19~~Section 4.8.2, ~~*Duct*~~ *Seasonal Distribution System Efficiency* and shall report all required measurements and the features used to achieve higher HVAC distribution efficiencies in the *Field* ~~*HERS Required*~~ *Verification and Diagnostic Testing* listings on the CF-1R. When the user chooses diagnostic testing, the diagnostic testing shall be performed as described in ~~Appendix~~ ACM RC~~F~~-2005. ~~Diagnostic testing must be reported in the *HERS Required Verification* listings on the CF-1R and C-2R as described in Chapter 2.~~

Standard Design. The standard heating and cooling system for central systems is ~~assumed to have~~modeled with non-designed air distribution ducts located in an attic space, with the duct leakage factor for sealed and tested new duct systems (see Table R4-13) ~~6% total tested duct leakage, non-ACCA Manual D designed duct system,~~ and a radiant barrier in climate zones where required by Package D. The *Standard Design* duct insulation is determined by the Package D specifications for the applicable climate zone. ~~R-4.2 duct insulation is assumed for the *Standard Design* building.~~ The *Standard Design* building is assumed to have the same number of stories as the *Proposed Design* for purposes of determining the duct efficiency. HVAC distribution system efficiencies ~~must~~shall be calculated using the algorithms and equations in ~~Appendix F~~ Chapter 4 of this manual for both the *Proposed Design* and the *Standard Design*. The *Standard Design* calculation ~~must~~shall use the default values of that procedure. For non-central HVAC systems, the *Standard Design* shall have no ducts.

3.6.7 Fan Energy

***Proposed* Design.** The ACM shall allow the user to specify whether or not the proposed design will take credit for reduced fan Watts, see Chapter 4. The credit for reduced fan Watts shall be reported in the *Special Features and Modeling Assumptions* listings on the CF-1R.

***Standard* Design.** The *Standard Design* shall have the default fan watts.

3.6.8 Maximum Cooling Capacity Credit

Proposed Design. The ACM shall allow the user to specify that the maximum cooling capacity determined using ACM RF-2005 will be met. Compliance credit may be taken if the installed cooling capacity is less than or equal to the maximum cooling capacity, and the system will have verified adequate airflow, sealed and tested ducts and proper refrigerant charge (or alternatively a TXV). The ACM shall not allow compliance credit to be taken for cooling capacity less than the maximum cooling capacity if any of these other features are not also specified for compliance. If this alternative is not used, the *Proposed Design* shall make no adjustment to the duct efficiency of the *Standard Design* for this feature. If compliance credit is taken for this alternative, it must be reported in the *Field Verification and Diagnostic Testing* listings of the CF-1R along with the other measures that are required to take the credit.

Standard Design. When this alternative is selected, the *Standard Design* shall model the Maximum Allowable Cooling Capacity as calculated using the procedure in ACM RM-2005, otherwise the *Standard Design* shall match the *Proposed Design*.

3.6.9 Adequate Airflow

Proposed Design. The default for the Proposed Design assumes inadequate airflow (see Section 4.7.4). However, compliance credit may be taken if adequate airflow is diagnostically tested using the procedures of Appendix RE. Adequate airflow shall be reported in the *Field Verification and Diagnostic Testing* listings of the CF-1R.

Standard Design. The standard design shall assume inadequate airflow as specified in section 4.7.4.

3.7 Water Heating

Proposed Design. ACMs shall be able to model the basic types of water heaters listed in Table R2-7, the water heating distribution system choices (within the dwelling unit) listed in Table R3-9 (and R2-5), and the multiple dwelling unit recirculating system control choices listed in R3-10 (and R2-6). ACM users shall specify the following information about each water heating system:

- The number of dwelling units served by the water heating system (needed only when the system serves multiple dwelling units).
- The number of water heaters that are a part of the system
- The performance characteristics of each water heater:
  - For gas water heaters with an input rating of 75,000 Btu/h or less and for electric water heaters with an input rating of 12 kW or less, the energy factor (EF) is entered.
  - For small instantaneous gas or oil water heaters as defined in the Appliance Efficiency Standards, the Energy Factor (EF) is entered.
  - For large instantaneous gas or oil water heaters as defined in the Appliance Efficiency Standards, the thermal efficiency (TE), pilot light energy (Pilot), standby loss (SBE or SBL), tank surface area (TSA), and R-value of exterior insulation wrap (REI) is entered.
  - For large storage water heaters, the hourly jacket loss, thermal efficiency (TE), and type (indirect or direct) and pilot light energy (Pilot) are entered. If not available from the manufacturer, jacket loss may be calculated from the tank surface area (TSA), the R-value of exterior insulating wrap (REI) and the standby loss expressed either as a fraction of the heat content of the stored water (SBL) or in Btu/hr (SBE). Tank surface area may also be calculated based on the tank capacity in gallons. See ACM RN for details.
- Information about any solar or wood stove supplementary heating that is provided. See ACM RN for details.

- The type of distribution system used within the dwelling unit. This is a selection from Table R3-8. For recirculating systems that serve multiple dwelling units, the brake horsepower of the circulation pump (hp), the efficiency of the pump, the efficiency of the motor, and the type of control (choose from Table R3-9).
- If multiple water heating systems serve a single dwelling unit, then the ACM shall keep track of the conditioned floor area served by each water heating system.
- For water heating systems serving multiple dwelling units, the ACM shall keep track of the dwelling units served by each system.

For systems serving multiple dwelling units, the characteristics of an average or typical dwelling unit, e.g. conditioned floor area and number of stories (within the dwelling unit), may be used in making calculations.

Table R3-8 – Water Heater Distribution System Choices (Within the Dwelling Unit)

Distribution System Measure	Code
Pipe Insulation (kitchen lines ≥ 3/4 inches) – Standard Case	STD
Pipe Insulation (all lines)	PIA
Standard pipes with no insulation	SNI
Point of Use	POU
Parallel Piping	PP
Recirculation (no control)	RNC
Recirculation + timer control	RTm
Recirculation + temperature control	RTmp
Recirculation + timer/temperature	RTmTmp
Recirculation + demand control	RDmd

Table R3-9 – Multiple Dwelling Unit Recirculating System Control Choices

Distribution System Measure	Code
No Control	NoCtrl
Timer Control	STD ~~Timer~~
~~Temperature Control~~	~~Temp~~
~~Timer and Temperature Control~~	~~Timer/Temp~~
~~Demand Recirculation~~	~~Demand~~

Standard Design. For multiple dwelling unit systems, the *Standard Design* shall have the same number of water heating systems as the *Proposed Design*. For single dwelling unit systems, the *Standard Design* shall have one water heating system, regardless of the number of systems in the *Proposed Design*. Each *Standard Design* water heating system shall have the characteristics specified in Table R3-10.

Table R3-10 – Specification of Standard Design Water Heater

Does the water heating system serve a single dwelling unit?	**Yes**	Standard design is a 50 gallon gas or LPG storage type water heater. If natural gas is available at the site, the standard design is a gas water heater, otherwise it is LPG. EF is equal to 0.575, which is the NAECA minimum for the 50 gallon basecase water heater. EF = 0.67 – 0.0019 V, where V is the volume in gallons. A standard distribution system with no circulation system. Actual efficiency depends on the size of the dwelling unit and the number of stories.				
	No	Does the proposed water heating system have a storage tank?	**Yes**	Is the input rating of each water heater in the proposed design less than or equal to 75,000 Btu/h or if electric, less than or equal to 12 kW.	**Yes**	Standard design is one or more NAECA gas or LPG water heater. If natural gas is available at the site, the standard design is a gas water heater, otherwise it is LPG. If the total storage volume of the proposed design is less than 100 gallons, then the standard design is single water heater with a storage volume equal to the total storage volume of the proposed design. If the total storage volume of the proposed design is larger than 100 gallons, then the standard design shall have multiple 100 gallon water heaters. The number of water heaters is equal to the total storage capacity of the proposed design divided by 100 and rounded up. The EF of each 100 gallon water heater shall be 0.48, which is the NAECA minimum. If the standard design is less than 100 gallons, then the EF = 0.67 – 0.0019 V. See specification of distribution system in the note below.
					No	Standard design is composed of the same number of large storage gas or LPG water heaters as in the proposed design with a storage volumes the same as the storage volumes of the proposed design. If natural gas is available at the site, the standard design is a gas water heater, otherwise it is LPG. The thermal efficiency is 0.80 and stand-by losses are as specified in Table 113A. See specification of distribution system in the note below.
			No	Standard design is the same number of natural gas or LPG instantaneous water heaters as in the proposed design with input ratings equal to those in the proposed design. If natural gas is available at the site, the standard design is a gas water heater, otherwise it is LPG. Thermal efficiency of the instantaneous water heaters shall be equal to the requirements of Table 113A. See specification of distribution system in the note below.		

The *Standard Design* distribution system for systems serving multiple dwelling units is described in more detail below:

1. When the distribution system is a recirculating system, the standard design shall be a recirculating system with timer controls, e.g. the coefficients in Table ~~RN4~~RG-5 for "Timer Controls" shall be used in the calculation of energy use for the standard design, otherwise the standard design shall be a non-recirculating system.
2. Pipe length and location in the standard design shall be the same as the proposed design. There are three possible locations defined in ACM RG-2005.
3. The pipes in the recirculation system shall be insulated in accordance with Section 150(j).
4. The pumping head and motor size for the standard design shall be equal to the pumping head and motor size in the proposed design.
5. The motor efficiency of the recirculation pump in the standard design shall be equal to the requirements in the CEC appliance efficiency standards, e.g. NEMA high efficiency motors.
6. The distribution losses within the dwelling units shall be calculated based on one story and the average dwelling unit size for all the dwelling units served by the water heating system (see ~~RN3.2~~RG-3.2).

~~3.9~~3.8 Additions and Alterations

There are three compliance approaches for additions to and alterations of existing buildings:

- Whole Building Approach
- Addition Alone Approach
- Existing + Addition + Alteration Approach

Each of these approaches and their accompanying rules are described in the following sections. The existing + addition + alteration approach is the most flexible.

3.8.1 Whole Building Approach

The entire proposed building, including all additions and/or alterations, is modeled the same as a newly constructed building. The building complies if the Proposed Design uses equal or less energy than the Standard Design.

Except in cases where the existing building is being completely remodeled, this is usually a difficult standard to meet as the existing building usually does not meet current standards and must be substantively upgraded.

Proposed Design. Entire building (including additions, alterations and existing building) modeled the same as new construction as described throughout the ACM manual.

Standard Design. Entire building modeled the same as new construction as described throughout the ACM manual.

3.8.2 Addition Alone Approach

The proposed addition alone is modeled the same as a newly constructed building except that the internal gains are prorated to the size of the dwelling, and any surfaces such as walls or ceilings that are between the existing building and the addition are modeled as adiabatic and not included in the calculations. Water heating is not modeled when using this approach. The addition complies if the Proposed Design uses equal or less space heating and space cooling TDV energy than the Standard Design.

The Addition Alone Approach shall not be used when alterations to the existing building are proposed or when there are proposed modifications to existing water heating or when additional water heaters are being added. Instead, the Existing + Addition + Alteration approach shall be used for these cases. Note that modifications to any surfaces between the existing building and the addition are part of the addition and are not considered alterations.

This approach works best when the energy features in the addition are similar to those in the prescriptive packages.

~~Additions are treated as separate new buildings except for the determination of internal heat gains, which are specified in Section 4.5 for the purpose of determining a *Standard Design* for the addition. The modeling of additions or alterations must be reported in the *Special Features and Modeling Assumptions* listings, which must state that the building vintage and the input assumptions corresponding to this vintage must be verified prior to alteration to receive credit.~~

~~When an existing HVAC system is extended to serve an addition, the default assumptions for duct and HVAC distribution efficiency must be used for both the *Proposed Design* and the *Standard Design*. However, when a new, high efficiency HVAC distribution system is used to serve the addition or the addition and the existing building, that system may be modeled to receive energy credit subject to diagnostic testing and verification of proper installation by a HERS rater.~~

Proposed Design. The user ~~must~~shall ~~enter an~~ indicat~~ion~~ e that an addition alone is being modeled and enter the conditioned floor area of the addition. The number of dwelling units shall be set to the fractional dwelling unit as specified in Section 4.1.4 below. ~~for the *Proposed Design*~~. Any surfaces that are between the existing building and the addition are not modeled or treated as an adiabatic surfaces. All other features of the addition

shall be modeled as for a newly constructed building. When an ACM has the capability of running an existing building plus an addition in a single pass, the addition and the existing building must be entered independently and reported independently. Special output must be created to clearly indicate existing building components separately from new components. Likewise altered existing components must have separate accounting and reporting. Existing building components must be reported exclusively in lowercase type and new or altered components exclusively in UPPERCASE type for single pass Addition with Existing Building runs or Alteration runs. ACMs that require two or more passes to model these situations do not require these restrictions on type case for existing and new (or altered) component reporting but these ACMs must clearly indicate which run corresponds to existing conditions and which run corresponds to the new or altered conditions and the *Special Features and Modeling Assumptions* listings for both runs must report that two output files, two CF-1Rs and two C-2Rs are required to be checked.

An existing building plus an addition may be modeled by means of two separate compliance runs:

The user or the ACM models the *Existing Building* and the *Addition plus the Altered Existing Building.* There will be two sets of energy use figures for each of these energy simulation runs, the predicted energy use of the modeled building (EU) and the predicted energy budget calculated based on the rules specified in this manual (EB).

Let

EU_e = the energy use of the existing building (*Proposed Design*).

EB_e = the energy budget for the existing building (*Standard Design*).

EU_{e+a} = the energy use of the altered existing building with the addition.

EB_{e+a} = the energy budget of the altered existing building with the addition.

and

A_e = the conditioned floor area of the existing building.

A_{e+a} = the conditioned floor area of the altered existing building with the addition.

Equation 3.3

$$F = \frac{A_e}{(A_{e+a})}$$

The altered existing building with the addition complies with the Standards when Equation 3.2 is satisfied:

Equation 3.4

$$EU_{e+a} \le EB_{e+a} + F \times (EU_e - EB_e)$$

When no water heating is proposed for the addition, the ACM must report that no water heating energy is being calculated and the energy budgets cannot reflect the use of water heating energy. When a new water heater is replacing the existing water heater for the whole dwelling, the ACM must use the existing plus addition approach to compliance with the water heater modeled with the existing building. When the specifications of the existing water heater are unknown, the water heating budget is determined as if the dwelling were all new construction.

When an existing HVAC system is extended to serve the addition, the Proposed Design shall assume the same efficiency for the HVAC equipment as the Standard Design.

When a dual-glazed greenhouse window or a dual-glazed skylight is installed in an addition, the Proposed Design U-factor shall be the lower of the Standard Design U-factor or the NFRC rated U-factor for the greenhouse window or skylight

If the addition increases the number of water heaters in the dwelling then the addition *Standard Design* must be modeled with a non-circulating, gas-fired water heater with a volume which is the lessor of the *Proposed Design* volume or 50 gallons and an Energy Factor of 0.60. If the building does not have gas service, the ACM may allow the *Standard Design* water heater to be a non-circulating electric water heater with an Energy Factor of 0.98.

Standard Design. ~~For additions, t~~The addition alone is modeled the same as newly constructed building as described throughout the ACM manual. ~~*Standard Design* shall have a total glazing area equal to that allowed by Package D and the conditioned floor area of the addition just as for new buildings. For the *Standard Design* the glazing orientation, U-value, and SHGC of the fenestration shall be modeled in the same manner as a new building.~~

~~When additions are modeled with an existing building, the ACM must require the user to determine and enter the vintage of the existing building. The ACM shall then use the default assumptions specified in 313 or modeling the existing structure. If the ACM allows the user to enter higher U-values, higher F2 values, higher SHGCs, lower efficiencies, or lower energy factors than the vintage defaults from 313 for the existing building's *Proposed Design*, the ACM must report such values as special features on the *Special Features and Modeling Assumptions* listings.~~

3.8.3 Existing + Addition + Alteration Approach

The proposed building, including all additions and/or alterations, is modeled with tags that describe each energy feature as part of the existing building or the addition or the alteration. The ACM uses the tags to create an existing + addition + alteration (abbreviated e+ad+al) standard design in accordance with the rules in this section that takes into account whether altered components meet or exceed the prescriptive alteration levels. The energy use of the e+ad+al Proposed Design shall use equal or less energy than the e+ad+al Standard Design.

Valid tags include:

- Existing - building features that currently exist and will not be altered
- Altered – building features that are being altered from existing conditions but are not part of an addition
- Added.- building features that are being added as part of an addition
- Deleted – existing building features that are being deleted as part of an addition or alteration

This section describes the case where the information about the e+ad+al is contained in a single input file using tags as needed for each zone, opaque surface, fenestration surface, mass surface, etc. Alternate input approaches that provide the information necessary to calculate and provide compliance documentation consistent with the descriptions in this section are allowed with approval from the Commission.

Proposed Design. The user shall indicate that an e+ad+al is being modeled and shall enter the appropriate tags for surfaces or systems. Features that are being altered will need to be paired by the ACM with the existing feature it replaces. The ACM shall clearly indicate each of the tags on the compliance documentation. To generate the proposed design, the ACM shall run the calculations using the surfaces and systems that represent the building when the additions and/or alterations are complete. This includes building features that are tagged as existing, altered and added. Features that are being deleted are not included in the proposed design.

When modeling an existing building, the ACM shall allow the use of the default assumptions specified in Table R3-11 for modeling the existing structure according to the vintage of the existing building. If the user enters higher U-factors, higher F-factors, higher SHGCs, lower efficiencies, or lower energy factors than the vintage defaults from Table R3-11 for the existing building's *Proposed Design*, the ACM shall report such values as special features in the *Special Features and Modeling Assumptions* listings.

Standard Design. Establishing the standard design for e+ad+al approach requires use of the tags entered by the user and, in some circumstances if there are alterations that involve fenestration, a simulation to determine if prescriptive shading requirements are met or exceeded. The resulting e+ad+al Standard Design is very different from the Standard Design for newly constructed buildings because it accounts for the energy use of the existing building and for altered features, and is dependent on whether altered features meet the prescriptive alteration requirements. The Standard Design is determined using the following rules:

- Existing features are included in the standard design
- Deleted features are included in the standard design

- Added features are assigned standard design values in the same manner as for an addition alone, as described above
- Altered features are modeled in the standard design as follows:

  General Approach. Each altered feature is compared to the prescriptive requirements in Section 152(b)1. Fenestration shading and area have additional modeling requirements described below:

  - If the altered feature meets or exceeds the prescriptive alteration requirements the Standard Design is the unaltered existing feature (note that the prescriptive alteration requirements are the mandatory requirements for all altered components plus additional prescriptive requirements for altered fenestration, HVAC equipment (refrigerant charge measurement or TXV), and ducts);
  - Otherwise, the Standard Design is the prescriptive alteration requirement (i.e., the mandatory requirement for altered components other than altered fenestration, HVAC equipment and ducts, which have additional prescriptive requirements beyond the mandatory requirements)

  Fenestration Shading. Determining whether the prescriptive alteration requirement for fenestration shading is met may require an annual TDV energy simulation as follows:

  - For climate zones with an SHGC requirement, where the annual TDV energy for the combination of the proposed altered fenestration and the shading of that altered fenestration by existing overhangs or sidefins is less than or equal to the annual TDV energy due to the prescriptive alteration fenestration shading requirement with no shading from overhangs or sidefins, the Standard Design is the unaltered existing feature (existing fenestration products plus existing shading). Otherwise, the Standard Design is the prescriptive alteration requirement.
  - For climate zones without an SHGC requirement, the Standard Design is the unaltered existing feature (existing fenestration products plus existing shading).

  Fenestration Area. The Standard Design surfaces and areas for the existing plus alteration (fenestration area in an addition is not included in this section) is determined as follows:

  - If no fenestration area is being added, then the fenestration surfaces in the Standard Design are the existing fenestration surfaces.
  - If fenestration area is being added and the existing fenestration area is less than or equal to 20% of the existing floor area and the combination of the existing ~~minus deleted~~ plus added fenestration is less than or equal to 20% of the existing floor area, then the fenestration surfaces in the Standard Design are the existing fenestration surfaces ~~minus the deleted fenestration surfaces~~ plus the added fenestration surfaces.
  - If fenestration area is being added and the existing fenestration area is less than or equal to 20% of the existing floor area and the combination of the existing ~~minus deleted~~ plus added fenestration is greater than 20% of the existing floor area, then the fenestration area in the Standard Design is 20% of the existing floor area. The fenestration surfaces in the Standard Design are the existing fenestration surfaces ~~minus the deleted fenestration surfaces~~ plus the added fenestration surfaces with the ~~combination of the deleted surface areas and~~ added surface areas scaled so that the total area of existing ~~minus deleted~~ plus added fenestration surfaces equals 20% of the existing floor area. For example, if the existing floor area is 2,000 square feet, the existing fenestration is 300 ~~400~~ square feet, ~~no fenestration area is being deleted~~ and the added fenestration is 200 square feet, the scaling factor applied to each added fenestration surface would be:

Equation R3-2

$$\text{ScalingFactor} = \frac{(\text{AddedFenArea} - \text{DeletedFenArea} + \text{ExistingFenArea}) - 0.20 \times \text{ExistingCFA}}{\text{DeletedFenArea} + \text{AddedFenArea}}$$

$$= \frac{(200 + 400) - 0.20 \times 2000}{200} = 0.50$$

$$\text{ScalingFactor} = \frac{(0.20\text{xExistingCFA}) - (\text{ExistingFenArea})}{\text{AddedFenArea}}$$

$$= \frac{(0.20 \times 2000) - 300}{200} = 0.50$$

Thus, the square footage of each of the new fenestration surfaces would be scaled by a factor of 0.50 to determine the Standard Design.

- Otherwise, if fenestration area is being added and the existing fenestration area is greater than 20% of the existing floor area, then the fenestration surfaces in the Standard Design are the existing fenestration surfaces.

The resulting Standard Design inputs are run as a single simulation and the results are compared to the Proposed Design. The energy use of the e+ad+al Proposed Design shall use equal or less energy than the e+ad+al Standard Design.

Conceptually, the e+ad+al approach can be described as follows where the right hand side term is calculated in a single simulation:

Equation R3-3 $$EU_{e+ad+al} \leq EU_e + EB_{ad} + EB_{al}$$

Where

$EU_{e+ad+al}$ = the Proposed Design energy use of the existing building with all additions and alterations completed

EU_e = the energy use for the unaltered portion of the existing building

EB_{ad} = the Standard Design energy use for the addition alone

EB_{al} = the Standard Design energy use of the altered features (= energy use of the unaltered existing feature when the prescriptive alteration requirements, including mandatory requirements, are met or energy use of the prescriptive alteration requirements when the prescriptive alteration requirements are not met).

3.8.4 Duct Sealing in Additions and Alterations

Section 152(a)1 establishes prescriptive requirements for duct sealing in additions and Sections 152(b)1.D. and 152(b)1.E. establish prescriptive requirements for duct sealing and duct insulation for installation of new and replacement duct systems and duct sealing for installation of new and replacement space conditioning equipment. Table R4-13 provides Duct Leakage Factors for modeling of sealed and tested new duct systems, sealed and tested existing duct systems, and untested duct systems built prior to and after June 1, 2001. Appendix RF provides procedures for duct leakage testing and Table RF-2 provides duct leakage tests and leakage criteria for sealed and tested new duct systems and sealed and tested existing duct systems. These requirements, factors, procedures, tests and criteria apply to performance compliance for duct sealing in Additions and Alterations.

Condition	*Proposed Design*	*Standard Design*
Additions Served by Entirely New Duct Systems	The Proposed Design shall be either sealed and tested new duct systems or untested duct systems.	The Standard Design shall be sealed and tested new duct systems.

Condition	Proposed Design	Standard Design
Additions Served by Extensions of Existing Duct Systems	The Proposed Design shall be either 1) sealed and tested new duct systems, if the total combined existing plus new duct system meets the leakage requirements for tested and sealed new duct systems; 2) sealed and tested existing duct systems, if the total combined existing plus new duct system meets the leakage requirements for tested and sealed existing duct systems; 3) untested duct systems in homes built after June 1, 2001; or 4) untested duct systems in homes built prior to June 1, 2001.	The Standard Design shall be sealed and tested existing duct systems.
Alterations with Prescriptive Duct Sealing Requirements when Entirely New Duct Systems are Installed	The Proposed Design shall be either 1) sealed and tested new duct systems; 2) untested duct systems built after June 1, 2001; or 3) untested duct systems in homes built prior to June 1, 2001.	The Prescriptive Alteration Requirement is sealed and tested new duct systems. Determine the Standard Design by the Standard Design rules in section 3.1.3.
Alterations with Prescriptive Duct Sealing Requirements when Existing Duct Systems are extended or replaced or when new or replacement air conditioners are installed	The Proposed Design shall be either 1) sealed and tested new duct systems, if the total combined existing plus new duct system meets the leakage requirements for tested and sealed new duct systems; 2) sealed and tested existing duct systems, if the total combined existing plus new duct system meets the leakage requirements for tested and sealed existing duct systems; 3) untested duct systems built after June 1, 2001; or 3) untested duct systems in homes built prior to June 1, 2001.	Prescriptive Alteration Requirement is sealed and tested existing duct systems. Determine the Standard Design by the Standard Design rules in section 3.1.3.
Alterations for which Prescriptive Duct Sealing Requirements do not apply	The Proposed Design shall be either 1) sealed and tested new duct systems, if the new duct system or the total combined existing plus new duct system meets the leakage requirements for tested and sealed new duct systems; 2) sealed and tested existing duct systems, if the total combined existing plus new duct system meets the leakage requirements for tested and sealed existing duct systems; 3) untested duct systems built after June 1, 2001; or 3) untested duct systems in homes built prior to June 1, 2001.	The Standard Design shall be either 1) untested duct systems built after June 1, 2001; or 3) untested duct systems in homes built prior to June 1, 2001.

Table R3-11 – Default Assumptions for Existing Buildings

~~Table R3-7 - Default Assumptions for Existing Buildings~~

	Default Assumptions for Year Built (Vintage)							
Conservation Measure	**Before 1978**	**1978 to 1983**	**1984 to 1991**	**1992 to 1998**	**1999 - 2000~~+~~**	**2001-2003**	**2004-2005**	**2006 and Later**
INSULATION ~~U-VALUE~~U-FACTOR								
Roof	0.07~~6~~9	0.04~~7~~9	0.04~~7~~9	0.04~~7~~9	0.04~~7~~9	0.04~~7~~9	0.04~~7~~9	0.04~~7~~9
Wall	0.~~386~~356	0.~~096~~110	0.~~096~~110	0.~~088~~102	0.~~088~~102	0.~~088~~102	0.~~088~~102	0.~~088~~102
Raised Floor ~~-~~-CrawlSp	0.0~~97~~99	0.0~~97~~99	0.0~~97~~99	0.046~~0.037~~	0.046~~0.037~~	0.046	0.046	0.046
Raised Floor-No CrawlSp	0.23~~9~~8	0.23~~9~~8	0.23~~9~~8	0.064~~0.097~~	0.064~~0.097~~	0.064	0.064	0.064
Slab Edge F~~2~~-factor =	0.7~~6~~3	0.7~~6~~3	0.7~~6~~3	0.7~~6~~3	0.7~~6~~3	0.7~~6~~3	0.7~~6~~3	0.7~~6~~3
Ducts	R-2.1	R-2.1	R-2.1	R-4.2	R-4.2	R-4.2	R-4.2	R-4.2
LEAKAGE								
Building (SLA)	4.9	4.9	4.9	4.9	4.9	4.9	4.9	4.9
Duct~~s~~ Leakage Factor (See Table 4-13)	~~28%~~0.86	~~28%~~0.86	~~28%~~0.86	~~28%~~0.86	~~28%~~0.86	0.89	0.89	0.89
FENESTRATION								
~~U-value~~U-factor	Use Table ~~Table 1-D~~116-A - Title 24, Part 6, Section 116 for all Vintages							
SHGC	Use Table ~~1-E~~-116-B - Title 24, Part 6, Section 116 for all Vintages							
Shading Dev.	Use ~~Table R3-4~~ Table R3-7 for all Vintages							
SPACE HEATING EFFICIENCY								
Gas Furnace (Central) AFUE	0.75	0.78	0.78	0.78	0.78	0.78	0.78	0.78
Gas Heater (Room) AFUE	0.65	0.65	0.65	0.65	0.65	0.65	0.65	0.65
Heat Pump HSPF	5.6	5.6	6.6	6.6	6.8	6.8	6.8	7.4
Electric Resistance HSPF	3.413	3.413	3.413	3.413	3.413	3.413	3.413	3.413
SPACE COOLING EFFICIENCY~~-~~								
All Types, SEER	8.0	8.0	8.9	9.7	9.7	9.7	9.7	12.0
WATER HEATING								
Energy Factor	0.525	0.525	0.525	0.525	0.58	0.58	0.575	0.575
Rated Input, MBH	28.0	28.0	28.0	28.0	~~28.0~~28.0	28.0	28.0	28.0

4. Required Modeling Assumptions and Algorithms

Most of the modeling assumptions and algorithms about building operation and climate are either fixed or restricted when an ACM is used for compliance.

All approved ACMs ~~must~~shall include and automatically use all the appropriate fixed and restricted inputs and calculation methods with no special entry required by the user. Users may not override the fixed inputs when the ACM is used for compliance calculations, nor ~~may they be~~are users allowed to go beyond the limitations of the restricted assumptions.

The fixed and restricted modeling assumptions apply to both the *Standard Design* run and to the *Proposed Design* run. The *standard* fixed and restricted modeling assumptions always apply to the *Standard Design* run and are the *default* for the *Proposed Design* ~~run~~. In some cases, the CEC has approved *alternate* fixed and restricted modeling assumptions that may be used in the *Proposed Design* run. When the assumptions differ between the *Standard Design* and the *Proposed Design*, this is called to the attention of the reader in this chapter. The alternate modeling assumptions may only be used when the *Proposed Design* run has a special building feature (e.g. zonal control) that is recognized ~~as an approved Exceptional Method~~for credit, and the ACM has been approved with this ~~optional~~ modeling capability. The modeling of such building features for compliance purposes ~~must~~shall always be documented ~~as entries~~ in the *Special Features and Modeling Assumptions* listings on the Certificate of Compliance ~~and on the Computer Method Summary~~.

~~The following subsections describe the fixed and restricted modeling assumptions or computer inputs and explain how they apply to both the *Standard Design* run and the *Proposed Design* run.~~

~~When~~ While this manual describes the algorithms and calculation methods used by the reference method, an ACM may use alternative algorithms to calculate the energy use of low-rise residential buildings provided that the algorithms are used consistently for the *Standard Design* and the *Proposed Design* and provided that the ACM passes the applicable tests described in Chapters 5 and 6 ~~and provided that the appropriate input summaries and output information is correctly produced by the ACM~~. ~~The reference methods of calculation are implemented in the CALRES computer program and used to generate the tests in Chapters 5 and 6.~~

~~However, certain algorithms and calculational procedures such as water heating and duct efficiency calculations must be modeled to produce intermediate results precisely and in detail. Typically the tests for these procedures will consist of random testing and result comparison of these intermediate results from a large number of possible tests and conditions.~~

4.1 General Modeling Assumptions

4.1.1 ~~4.10 Standard~~ Weather Data

~~***Standard Design* & *Proposed Design*:**~~ All ACMs ~~must~~shall use standard hourly weather data for ~~all~~ compliance runs. ~~The standard weather data may be condensed, statistically summarized, or otherwise reduced. However, the basis must be the official Commission's hourly weather data.~~ The same hourly weather data and weather data format ~~must~~shall be used for both the *Standard Design* ~~run~~ and the *Proposed Design* ~~run~~calculations.

ACM Joint Appendix II contains information about how to obtain the official CEC weather data. ~~The official hourly weather data for energy compliance is available from the Commission on 1.44 megabyte, 3.5 inch floppy diskettes (IBM-PC format).~~ There are 16 climate zones with a complete year of 8,760 hourly weather records. Each climate zone is represented by a particular city. ~~More detail on the weather formats is given in the description package mailed with the weather tapes. The weather data may be obtained by mailing a written request for the weather data, a self-addressed diskette mailer, and three IBM-formatted 1.44 Megabyte diskettes to: RESACM Weather Data, Residential Office, California Energy Commission, 1516 Ninth Street MS#25, Sacramento, California 95814-5512.~~

Time Dependent Valuation (TDV) energy is the parameter used to compare the energy consumption of proposed designs to energy budgets. TDV replaces the source energy multipliers of one for natural gas and 3 for electric. TDV is explained in ACM Joint Appendix III in more detail.

4.1.2 ~~4.11~~ Ground Reflectivity

~~***Standard Design & Proposed Design***:~~ ACMs shall assume that the ground surrounding residential buildings has a reflectivity of 20 percent in both summer and winter. This applies to both the *Standard Design* ~~run~~ and *Proposed Design* ~~run~~.

4.1.3 ~~4.1~~ Thermostats

~~***Standard Design*** & ***Proposed Design***:~~ The *standard* thermostat settings are shown in ~~the Table R 4-1~~ Table R~~4-~~1 below. The values for the "Whole House" ~~These thermostat setpoints~~ apply to the *Standard Design* run and are the default for the *Proposed Design* run. See the explanation later in this section regarding the values for Zonal Control.

~~*Table R4-1 - Thermostat Settings*~~

	~~Cooling Mode~~	~~Heating Mode~~
~~Cooling Thermostat~~	~~78°F~~	~~78°~~
~~Heating Thermostat~~	~~60°F~~	~~68°F~~
~~Heating Setback~~	~~60°F~~	~~60°F~~
~~Ventilation Setpoints~~	~~68°F~~	~~77°F~~
~~Change-over Temperature~~	~~60°F~~	~~60°F~~

~~It is assumed that the building has a constant cooling setpoint of 78°F. When the building is in a heating mode, the heating setpoint is 68°F with night setback to 60°F. The heating thermostat is set back from 11:00 pm until 7:00 am. During the summer or when the building is in a cooling mode, the heating setpoint is a constant 60°F.~~

~~The ventilation setpoint is 68°F when the building is in a cooling mode and 77°F when the building is in a heating mode. The state of the building's conditioning mode is dependent upon the outdoor temperature averaged over hours 1 through 24 of day 8 through day 2 prior to the current day. The ACM shall calculate and update daily this seven day running average of outdoor air temperature. When this average temperature is equal to or less than 60°F the building shall be set in a heating mode and all the thermostat setpoints for the heating mode shall apply. When the running average is greater than 60°F the building shall be set to be in a cooling mode and the cooling mode setpoints shall apply.~~

~~The standard heating and cooling setpoints are shown in Table 4-2 below for each hour of the day.~~

Table R4-1 – ~~Standard~~ Hourly Thermostat Set Points

	Whole House		Zonal Control Living Areas		Zonal Control Sleeping Areas		
Hour	Heating	Cooling	Heating	Cooling	Heating	Cooling	Venting
1	65	78	65~~60~~	83	65~~60~~	78	Off~~68~~
2	65	78	65~~60~~	83	65~~60~~	78	Off~~68~~
3	65	78	65~~60~~	83	65~~60~~	78	Off~~68~~
4	65	78	65~~60~~	83	65~~60~~	78	Off~~68~~
5	65	78	65~~60~~	83	65~~60~~	78	Off~~68~~
6	65	78	65~~60~~	83	65~~60~~	78	68
7	65	78	65~~60~~	83	65~~60~~	78	68
8	68	83	68	83~~78~~	68	83	68
9	68	83	68	83~~78~~	65~~60~~	83	68
10	68	83	68	83~~78~~	65~~60~~	83	68
11	68	83	68	83~~78~~	65~~60~~	83	68
12	68	83	68	83~~78~~	65~~60~~	83	68
13	68	83	68	83~~78~~	65~~60~~	83	68
14	68	82	68	82~~78~~	65~~60~~	83	68
15	68	81	68	81~~78~~	65~~60~~	83	68
16	68	80	68	80~~78~~	65~~60~~	83	68
17	68	79	68	79~~78~~	65~~60~~	83	68
18	68	78	68	78	65~~60~~	83	68
19	68	78	68	78	65~~60~~	83	68
20	68	78	68	78	65~~60~~	83	68
21	68	78	68	78	65~~60~~	83	68
22	68	78	68	78	68	78	68
23	68	78	68	78	68	78	68
24	65	78	65~~60~~	83	65~~60~~	78	~~68~~Off

Determining Heating Mode vs. Cooling Mode. When the building is in the heating mode, the heating setpoints for each hour are set to the "Heating" values in Table R4-1~~-R~~, the cooling setpoint is set to a constant 78°F and the ventilation setpoint is set to a constant 77°F. When the building is in the cooling mode, the "Cooling" values are used. The heating setpoint is set to a constant 60°F, and the cooling and venting setpoints are set to the values in Table R4-1.

The state of the building's conditioning mode is dependent upon the outdoor temperature averaged over hours 1 through 24 of day 8 through day 2 prior to the current day (e.g., if the current day is June 21, the mode is based on the average temperature for June 13 through 20). The ACM shall calculate and update daily this 7-day running average of outdoor air temperature. When this running average temperature is equal to or less than 60°F the building shall be set in a heating mode and all the thermostat setpoints for the heating mode shall apply. When the running average is greater than 60°F the building shall be set to be in a cooling mode and the cooling mode setpoints shall apply.

Zonal Control: An optional capability, described in ~~Section 6.2~~Chapter 6, allows alternative thermostat schedules to be used for the *Proposed Design* run when the HVAC system meets the requirements for zonal control. With zonal control, the building is divided into sleeping and living areas and a separate schedule is used for each area. If the user selects this option the ACM shall ~~select~~ use the appropriate alternative schedules based on the user's designations for sleeping and living zones and shall automatically report the use of this optional capability in the *Special Features and Modeling Assumptions* listings in the ~~required standard reports~~CF1-R. The setpoints for zonal control are also shown in Table R4-1.

Setback Thermostat Exceptions. Certain types of heating and/or cooling equipment are ~~exempt~~ excepted from the mandatory requirement for setback thermostats, including wall furnaces and through-the-wall heat pumps. If setback thermostats are not installed, then the ACM shall model the *Proposed Design* with the standard

thermostat schedule, except that the heating mode setback setpoint shall be 66°F. ~~instead of 60°F.~~ In cases where setback thermostats are not mandatory but nonetheless are installed by the builder, the ACM shall model the *Proposed Design* using the standard heating setback setpoint of ~~60~~65°F. The *Standard Design* always assumes the setback schedule shown in Table R4-1~~Table R 4-2~~.

4.1.4 ~~4.5~~ Internal Gains

Basic Allocation ~~Standard Design & Proposed Design~~

Internal gain from lights, appliances, people and other sources shall be set to 20,000 Btu/day for each dwelling unit plus 15 Btu/day for each square foot of conditioned floor area (CFA) as shown in Equation R4-1.

Equation R4-1

$$IntGain_{total} = (20{,}000 \times N) + \left(15 \times \sum_{i=1}^{N} CFA_i\right)$$

Where

N= Number of dwelling units ~~(NumDwellUnits)~~

CFA_i= Conditioned Floor Area of ith dwelling unit

Zonal Control

For zonal control, an optional modeling capability, the internal gains are split between the living areas and the sleeping areas as indicated in the following equations. The 20,000 Btu/day fixed component is assigned 100% to the living areas and the 15 Btu/ft² component is allocated according to floor area. See Equation R4-2 and Equation R4-3.

Equation R4-2

$$IntGain_{Living} = 15 \times CFA_{Living}$$

Equation R4-3

$$IntGain_{Sleeping} = 15 \times CFA_{Sleeping}$$

Additions

For addition-alone compliance (single-zone), the internal gains are apportioned according to the fractional conditioned floor area, referred to as the Fractional Dwelling Unit (FDU). For zone j, the internal gain is determined by Equation R4-4~~:~~. ~~Equation 4.2:~~

Equation R4-4

$$IntGainZone_j = IntGain_{tot} \times FDU_j$$

where

FDU_j ~~=~~ = Fractional Dwelling Unit of jth zone, calculated from Equation R4-5~~Equation 4.3~~

Equation R4-5

$$FDU_j = \frac{CFA_j}{CFA_{total}}$$

~~When zonal control is a feature of the *Proposed Design* for a single dwelling unit, the total internal gain is split between the living areas and the sleeping areas as described in Section 6.2.3, pg. 6-4~~

Building additions may be modeled in conjunction with the existing dwelling or modeled separately (see ~~Sections 6.7.1 and 6.7.2~~Chapter 6). When modeled together the number of dwelling units for the proposed dwelling ($NDU_{proposed}$) remains equal to the number of dwelling units for the existing structure ($NDU_{existing}$), while the conditioned floor area ($CFA_{proposed}$) is increased to include the contribution of the addition ($CFA_{addition}$). When

modeled separately, the internal gain of the addition ($IntGain_{addition}$)is based on the value of the addition's fractional dwelling unit ($FDU_{addition}$), as expressed in Equation R4-6 and Equation R4-7. ~~Equations 4.4 and 4.5.~~

~~Modeling additions is an optional capability described in Section 6.7, Page 6-17.~~

Equation R4-6

$$IntGain_{addition} = IntGain_{total} \times FDU_{addition}$$

~~where~~

Equation R4-7

$$FDU_{addition} = \frac{CFA_{addition}}{CFA_{existing} + CFA_{addition}}$$

Hourly ~~4.6Internal Gain~~ Schedules

~~***Standard Design*** & ***Proposed Design*** For hourly computer models, the~~ The standard hourly internal gain schedule is shown in Table R4-2~~Table R 4-4 applies~~. “Hour one” is between midnight and 1:00 am. ~~This~~ The whole building schedule shall always be used for the *Standard Design* run. The whole building is also used ~~It is the default~~ for the *Proposed Design* ~~run and shall be used~~ unless the *Proposed Design* has zonal control. For zonal control, the Living Areas schedule is used for the living areas and the Sleeping Areas schedule is used for sleeping areas. ~~assumptions, see Chapter 6, Section 6.2.~~

Table R4-2 – Hourly Internal Gain Schedules

	Percent of Daily Total Internal Gains (%)		
Hour	Whole House	Living Areas	Sleeping Areas
1	2.40	1.61	4.38
2	2.20	1.48	4.02
3	2.10	1.14	4.50
4	2.10	1.13	4.50
5	2.10	1.21	4.32
6	2.60	1.46	5.46
7	3.80	2.77	6.39
8	5.90	5.30	7.40
9	5.60	6.33	3.76
10	6.00	6.86	3.85
11	5.90	6.38	4.70
12	4.60	5.00	3.61
13	4.50	4.84	3.65
14	3.00	3.15	2.63
15	2.80	2.94	2.46
16	3.10	3.41	2.32
17	5.70	6.19	4.47
18	6.40	7.18	4.45
19	6.40	7.24	4.29
20	5.20	5.96	3.30
21	5.00	5.49	3.75
22	5.50	6.20	3.75
23	4.40	4.38	4.45
24	2.70	2.35	3.59
Total	100.00	100.00	100.00

Seasonal Adjustments

Daily internal gain shall be modified each month according to the ~~set of~~ multipliers shown in Table R4-3~~Table 4-5~~. These multipliers are derived from the number of daylight hours for each month.

Table R4-3 – Seasonal Internal Gain Multipliers

Month	Multiplier	Month	Multiplier	Month	Multiplier
Jan	1.19	May	0.84	Sep	0.98
Feb	1.11	Jun	0.80	Oct	1.07
Mar	1.02	Jul	0.82	Nov	1.16
Apr	0.93	Aug	0.88	Dec	1.21

4.2 Heat Gains and Losses Through Opaque Surfaces

~~4.20Absorptivity~~

~~***Standard Design***: In the *Standard Design* run, the absorptivity of all surfaces is assumed to be the same as the *Proposed Design*.~~

~~***Proposed Design***: In the *Proposed Design*, the absorptivity of walls or other surfaces adjacent to unconditioned spaces, such as crawl space floors and walls adjacent to attached garages, may be assumed to be zero, otherwise all surfaces shall be assumed to have an absorptivity of 0.50.~~

4.2.1 ~~4.24~~ Radiant Barriers

Algorithm

~~***Standard Design***: The *Standard Design* has a radiant barrier in accordance with Package D requirements.~~

Proposed Design: The benefits of r~~R~~adiant barriers are modeled in two ways. First, the ~~by calculating~~ ceiling ~~U-value~~U-factor is modified for each season (heating mode and cooling mode) to account for reduced heat gain (attics are not modeled as separate unconditioned thermal zones in residential ACMs). Second, ~~modifiers that are functions of the ceiling insulation and the season and by using different~~ the seasonal ~~attic~~ temperatures for attics are lower with radiant barriers, which results in better HVAC distribution ~~efficiencies~~ efficiency for ducts located in the attic ~~below a radiant barrier~~. See the algorithms for HVAC air distribution ducts for more details.

When the building is in a heating mode, (see Section 4.1.3), ~~For the heating season, Equation~~ Equation R4-8~~___~~ ~~is~~ provides ~~the expression for~~ the ~~U-value~~U-factor modifier due to the presence of a radiant barrier. When ~~; for~~ the building is in a cooling ~~season~~mode, ~~Equation~~ Equation R4-9 is used~~__~~. To determine the ~~U-value~~U-factor for a ceiling with a radiant barrier, multiply the ~~U-value~~U-factor of the ceiling assembly ~~without~~ located beneath a ~~the~~ radiant barrier times the ~~U-value~~U-factor modifier. ~~The U-value modifiers are calculated from equations __ and __.~~These modifiers may only be used for

~~For~~ installed insulation greater than R-8, otherwise the modifer is 1.00.~~:~~

Equation R4-8 $$UvalMod_{heating} = (-11.404 \times U^2) + (0.21737 \times U) + 0.92661$$

Equation R4-9 $$UvalMod_{cooling} = (-58.511 \times U^2) + (3.22249 \times U) + 0.64768$$

~~Otherwise these modifiers are 1.000.~~

Eligibility Criteria

Radiant barriers ~~must~~shall meet specific eligibility and installation criteria to be modeled by any ACM and receive energy credit for compliance with the energy efficiency standards for low-rise residential buildings.

- The emittance of the radiant barrier ~~must~~shall be less than or equal to 0.05 as tested in accordance with ASTM C-1371~~-97~~8 or ASTM E408~~-71(1996)e1~~.
- Installation ~~must~~shall ~~be in~~ conform~~ance~~ ~~with~~ to ASTM C-1158~~-97~~ (Standard Practice For Use and Installation Of Radiant Barrier Systems (RBS) In Building Construction.), ASTM C-727~~-90(1996)e1~~ (Standard Practice For Installation and Use Of Reflective Insulation In Building Constructions.), ASTM C1313~~-97~~5 (Standard Specification for Sheet Radiant Barriers for Building Construction Applications), and ASTM C-1224~~-99~~3 (Standard Specification for Reflective Insulation for Building Applications), and the radiant barrier ~~must~~shall be securely installed in a permanent manner with the shiny side facing down toward the interior of the building (ceiling or attic floor). Moreover, radiant barriers ~~must~~shall be installed ~~to~~ at the top chords of the roof truss/rafters ~~(top chords)~~ in ***any*** of the following methods~~, with the material~~:

1. Draped over the truss/rafter (the top chords) before the upper roof decking is installed.
2. Spanning between the truss/rafters (top chords) and secured (stapled) to each side.
3. Secured (stapled) to the bottom surface of the truss/rafter (top chord). A minimum air space ~~must~~shall be maintained between the top surface of the radiant barrier and roof decking of not less than 1.5 inches at the center of the truss/rafter span.
4. Attached [laminated] directly to the underside of the roof decking. The radiant barrier ~~must~~shall be laminated and perforated by the manufacturer to allow moisture/vapor transfer through the roof deck.

In addition, the radiant barrier ~~must~~shall be installed to cover all gable end walls and other vertical surfaces in the attic.

- The attic ~~must~~shall be ventilated to:

  1. ~~conform~~ Conform to the radiant barrier manufacturer's instructions.
  2. ~~provide~~ Provide a minimum free ventilation area of not less than one square foot of vent area for each 150 square feet of attic floor area.
  3. ~~provide~~ Provide no less than 30 percent upper vents.

  ~~(~~Ridge vents or gable end vents are recommended to achieve the best performance. The material should be cut to allow for full airflow to the venting.~~)~~

- The radiant barrier (except for radiant barriers laminated directly to the roof deck) ~~must~~shall be installed to have a minimum gap of 3.5 inches between the bottom of the radiant barrier and the top of the ceiling insulation to allow ventilation air to flow between the roof decking and the top surface of the radiant barrier have a minimum of six (6) inches (measured horizontally) left at the roof peak to allow hot air to escape from the air space between the roof decking and the top surface of the radiant barrier.
- When installed in enclosed rafter spaces where ceilings are applied directly to the underside of roof rafters, a minimum air space of 1 inch ~~must~~shall be provided between the radiant barrier and the top of the ceiling insulation, and ventilation ~~must~~shall be provided for every rafter space. Vents ~~must~~shall be provided at both the upper and lower ends of the enclosed rafter space.
- The product ~~must~~shall meet all requirements for California certified insulation materials [radiant barriers] of the Department of Consumer Affairs, Bureau of Home Furnishings and Thermal Insulation, as specified by CCR, Title 24, Part 12, Chapter 12-13, Standards for Insulating Material.
- The use of a radiant barrier ~~and the criteria specified above for covering all gable end walls and other vertical surfaces in the attic, and for providing attic ventilation~~ shall be listed in the *Special Features and Modeling Assumptions* listings of the CF-1R ~~and C-2R~~ and described in detail in the ACM Compliance Supplement.

4.2.1 ~~4.25~~ Cool Roofs

Algorithm

~~***Standard Design***: The *Standard Design* does not have a cool roof.~~

~~***Proposed Design***:~~ Cool roofs are ~~assumed~~ modeled to have an impact equal to the cooling savings for radiant barriers. The calculations for cool roofs are the same as radiant barriers, ~~are the same as described in section 4.24~~ except that $UvalMod_{heating}$ (see Equation R4-8~~equation ___~~) is assigned a value of 1.00. In the event that both a cool roof and radiant barrier ~~is~~ are specified, there is no credit for the cool roof.

Eligibility Criteria

Cool roofs ~~must~~shall meet specific eligibility and installation criteria to receive ~~energy~~ credit for compliance ~~as described in the standards and this section~~. ~~In general, t~~The solar reflectance ~~must~~shall be 0.4 or higher for tile roofs or 0.7 or higher ~~the~~ for other roof materials; and the emittance ~~must~~shall be 0.75 or higher. Liquid applied

cool roof products shall meet the requirements of Section 118(i)3 of the standards. All products qualifying for this credit shall be rated and labeled by the Cool Roof Rating Council in accord with Section 10-113 of the standards. The use of a cool roof shall be listed in the *Special Features and Modeling Assumptions* listings of the CF-1R ~~and C-2R~~ and described in detail in the ACM Compliance Supplement.

~~Liquid applied roofing products shall be applied at a minimum dry mil thickness of 20 mils across the entire roof surface, and meet the minimum performance requirements of ASTM D6083-97a when tested in accordance with ASTM D6083-97a for the following key properties:~~

~~* Initial Tensile Strength~~

~~* Initial Elongation~~

~~* Elongation After 1000 Hours Accelerated Weathering~~

~~* Permeance~~

~~* Accelerated Weathering~~

~~Effective January 1, 2003, all products qualifying for this credit will be required to meet the Cool Roof Rating Council testing, certification and labeling requirements described in Section 10-113 of the standards. Prior to January 1, 2003, the solar reflectance shall be measured in accordance with ASTM E1918-97 or ASTM E903-96. Emittance shall be measured in accordance with ASTM E408-71(1996)e1. The solar reflectance and emittance shall be certified by the manufacturer and reported in product literature.~~

4.2.2 ~~4.2~~ R-Value/~~U-Value~~U-factor Determinations ~~and Calculations~~

~~According to the Standards, the R-value of a material is "the [thermal] resistance of a material or building component to the passage of heat in (hr x ft^2 x ºF)/Btu."~~

~~The R-value indicates how well a material prevents heat from flowing through it. R-19 insulation, for example, is only half as effective at slowing heat transfer as R-38 insulation.~~

~~Overall~~ T~~t~~hermal resistances (~~overall~~ R-values) and ~~overall~~ thermal transmittance values (~~overall U-value~~U-factors) shall be ~~calculated~~ determined from ACM Joint Appendix IV. ~~using algorithms and methods consistent with the algorithms and methods in the 1997 ASHRAE Handbook of Fundamentals, Chapters 22, 23 and 24. For construction assemblies or portions of construction assemblies that consist of two or more plane parallel layers of materials in series (such as exterior siding, insulation and interior gypsum board), the thermal resistance of the assembly is equal to the sum of the individual thermal resistances. When layers are penetrated or interrupted by wood framing or other framing elements that do not readily conduct heat, the parallel path method shall be used to calculate the R-value and U-value of the construction assembly.~~ Standard framed (wood and metal) walls with studs 16 in. on center shall be modeled to have 25% framing, and standard framed walls with studs located at 24 in. centers shall be modeled to have 22% framing. ~~When metal framing is used or construction layers are penetrated by other significant amounts of highly heat conductive materials such as metals, the zonal calculation method, modified zonal calculation method, finite element or finite difference methods, or the Commission's EZ-frame computer program must be used to determine overall R-value and overall U-value.~~

~~Most typical constructions can be calculated using the parallel path method and documented using the residential compliance Form 3R.~~

~~The U-value is the inverse of the total R-value:~~

~~Equation 4.10~~

$$U = \frac{1}{R_{Total}}$$

Degree of Precision:

~~The U-value is the heat transfer coefficient expressed in Btu/ft^2-hr-^{o}F, the rate at which heat flows through an assembly or material.~~

The total R-value shall be entered, stored, displayed, and calculated to at least three significant figures, or, alternatively to two decimal places, and the total ~~U-value~~U-factor to two significant figures or three decimal places whichever is more precise.

~~4.2.1 Default R-values/U-values in Appendix E~~

Data from ACM Joint Appendix ~~E~~ IV ~~contains pre-calculated Form 3Rs for a number of standard assemblies. The Total R-values and U-values from these assemblies must~~shall be used in compliance calculations unless the CEC approves alternate values through the exceptional methods process. ~~a Form 3R is completed for the actual proposed assembly, or unless the compliance approach only uses the insulation level alone. Table E-7 in Appendix E summarizes these default U-values.~~

Appendix IV also includes pre-calculated assemblies that meet the default U-factors using a combination of batt and rigid insulation. Steel framing assemblies are also included. Appendix IV has R-values for common materials; information on a variety of masonry wall assemblies; and other data useful in determining the U-factor of an assembly.

~~Appendix E also includes Form 3Rs for assemblies that meet the default U-values with a combination of batt and rigid insulation, rather than only batt insulation (including metal frame assemblies). In addition, it contains R-values and other information on a variety of masonry wall assemblies.~~

~~To determine if an assembly meets the minimum insulation levels required by the mandatory measures or the prescriptive packages, obtain the U-value of the proposed assembly or complete a Form 3R and see if the proposed U-value is less than or equal to the standard U-value for that assembly type and insulation level as listed in Table 3-1 in Chapter 3 and Table E-2 in Appendix E. Compare the proposed U-value to the U-values listed for framing spacing of 16" o.c. for walls and 24".o.c. for roofs/ ceilings.~~

4.2.3 Insulation Installation Quality

Compliance credit is available for low-rise residential buildings if field verification is performed to ensure that quality insulation and air barrier installation procedures are followed (see ACM RH-2005). All newly insulated opaque surfaces in a building must be field verified to receive this credit. Compliance reports and user interfaces shall identify the building as having either *Standard* or *Improved* insulation installation quality. As discussed in Chapter 3, the *Standard Design* shall have standard insulation installation quality. Approved ACMs must be able to model both *Standard* and *Improved* insulation installation quality (see Table R4-4).

Table R4-4 – Modeling Rules for insulation installation Quality

		insulation installation Quality	
Component	Mode	Standard	Improved
Walls	Both	Increase heat gains and losses by 19%, i.e., multiply all wall U-factors by 1.19.	Increase heat gains and losses by 5%, i.e., multiply all wall U-factors by 1.05.
Ceilings/Roofs	Heating	Add 0.02 times the area to the UA of each ceiling surface i.e., add 0.02 to the U-factor.	Add 0.01 times the area to the UA of each ceiling surface i.e., add 0.01 to the U-factor.
	Cooling	Add 0.005 times the area to the UA of each ceiling surface i.e., add 0.005 to the U-factor.	Add 0.002 times the area to the UA of each ceiling surface i.e., add 0.002 to the U-factor.

When credit is taken for Improved insulation installation quality, the *Field Verification and Diagnostic Testing* section of the CF-1R shall show that field verification is required (see Chapter 2) and the Installation Certificate (CF-6R) and the Field Verification and Diagnostic Testing Certificate (CF-4R) must be completed and signed by the installer and HERS Rater, respectively.

4.2.4 ~~4.7.1~~ Perimeters of Slab Floors and Carpeted Slabs

~~***Standard Design & Proposed Design:***~~ For *Standard and Proposed Designs* all ACMs ~~must~~shall use slab edge F2 values assuming that 20% of the slab floor perimeter is exposed to the conditioned air and 80% of the

slab floor perimeter is carpeted or covered with an R-2 insulating layer between the slab and the conditioned air. See ACM Joint Appendix IV.

The monthly ground temperatures shown in Table R4-5~~6~~ shall be used as the exterior temperature when calculating slab edge heat loss.

Table R4-5 – Monthly and Annual Average Ground Temperatures

Climate Zone	Month												Annual Average
	J	F	M	A	M	J	J	A	S	O	N	D	
1	52.2	51.5	51.4	51.8	53.1	54.5	55.6	56.4	56.4	55.8	54.7	53.4	53.9
2	53.3	51.5	51.4	52.2	55.6	58.9	61.8	63.6	63.8	62.3	59.5	56.3	57.5
3	55.1	54.1	54.0	54.5	56.5	58.5	60.3	61.4	61.5	60.6	58.9	56.9	57.7
4	55.5	54.0	53.9	54.6	57.5	60.3	62.8	64.3	64.5	63.2	60.8	58.0	59.1
5	55.7	54.8	54.7	55.2	56.9	58.7	60.2	61.1	61.2	60.4	59.0	57.3	57.9
6	59.1	58.1	58.0	58.5	60.4	62.4	64.0	65.1	65.2	64.3	62.7	60.8	61.6
7	60.1	59.1	59.0	59.5	61.5	63.4	65.2	66.2	66.3	65.5	63.8	61.9	62.6
8	60.0	58.8	58.7	59.2	61.6	63.9	66.0	67.3	67.4	66.3	64.3	62.1	63.0
9	60.5	59.1	59.0	59.7	62.2	64.8	67.1	68.5	68.6	67.5	65.3	62.8	63.8
10	59.4	57.6	57.4	58.3	61.8	65.2	68.2	70.1	70.2	68.7	65.8	62.4	63.8
11	54.9	52.4	52.2	53.4	58.2	63.0	67.2	69.8	70.0	67.9	63.8	59.2	61.0
12	54.6	52.5	52.3	53.3	57.3	61.3	64.8	67.0	67.2	65.4	62.0	58.1	59.7
13	57.5	54.7	54.5	55.8	61.0	66.2	70.6	73.5	73.7	71.4	67.0	62.0	64.0
14	54.2	51.2	51.0	52.4	58.2	63.9	68.8	72.0	72.2	69.7	64.8	59.3	61.5
15	66.8	64.0	63.8	65.1	70.4	75.8	80.4	83.3	83.6	81.2	76.7	71.5	73.6
16	44.4	41.8	41.6	42.8	47.7	52.6	56.8	59.5	59.7	57.5	53.4	48.7	50.5

~~***Standard Design:*** The slab perimeter shall be assumed to have an F2 value based on perimeter insulation as specified for Alternative Component Package D in Section 151 of the building efficiency standards. The Standard Design also assumes that no unconditioned spaces are attached to the conditioned space (in particular that the garage is detached), hence the total slab perimeter length is either insulated or uninsulated per the requirements of Alternative Component Package D. Hence, for the *Standard Design*, the slab edge heat loss factor, F2, is 0.76 for all climate zones except Climate Zone 16 where F2 is 0.51.~~

~~***Proposed Design:*** Slab perimeter insulation shall be modeled using an F2 factor for the insulation to be installed and the perimeter length that is to be insulated. The slab perimeter length adjacent to unconditioned spaces such as a garage may be modeled as an R-7 insulated perimeter with an F2 factor of 0.51.~~

4.2.5 ~~4.3~~ Basement Modeling - Basement Walls and Floors

Below grade walls shall be modeled with ~~have no exterior absorptivity (no radiant~~ no solar gains, i.e., absorptivity is zero. ~~from sunlight).~~ Below grade walls are modeled with three exterior conditions depending on whether the depth is shallow, medium, or deep. The temperature of the earth depends on the depth of the wall and is given in Table R4-6. Thermal resistance also shall be increased to account for earth near the construction (see Table R4-6).

Table R4-6 – Earth Temperatures for Modeling Basement Walls and Floors

Class	Depth	Assumed Temperature of the Earth	Thermal Resistance of Earth
Shallow Depth Walls	Up to 2 ft	Average air temperature for hours 1 through 24 of the 7 days beginning 8 days prior to the current day (days -8 through -2).	A thermal resistance with an R-value of 1.57 (hr.ft^2.°F/Btu) is added to the outside of the below grade wall.
Medium Depth Walls	2+ to 6 ft	Exterior earth temperature is assumed to be the monthly average temperature from Table R4-5.	A thermal resistance with an R-value of 7.28 (hr.ft2.°F/Btu) is added to the outside of the below grade wall.
Deep Walls	More than 6 ft	Exterior earth temperature is used which is typical of deep ground. Use the annual average value from Table R4-5.	A thermal resistance with an R-value of 13.7 (hr.ft2.°F/Btu) is added to the outside of the below grade wall.
Basement Floors	Any	Exterior earth temperature is used which is typical of deep ground. Use the annual average value from Table R4-5.	A thermal resistance with an R-value of 17.6 (hr.ft2.°F/Btu) is added to the bottom of the basement floor.

~~4.3.1 Shallow Depth Walls~~

~~The first two feet (inclusive) of the below grade wall uses the average air temperature for hours 1 through 24 of the 7 days beginning 8 days prior to the current day (days -8 through -2). In addition, a thermal resistance with an R-value of 1.57 (hr.ft^2.°F/Btu) is added between this average temperature and the outside of the below grade wall.~~

~~4.3.2 Medium Depth Walls~~

~~The basement walls from more than 2 feet below grade through 6 feet below grade have an exterior temperature that is the average of hours 1 though 24 of the 7 days of outdoor temperature from the period starting 68 days prior to the current day being simulated through 62 days prior to the first hour of the current day being simulated. In addition, a thermal resistance with an R-value of 7.28 (hr.ft2.°F/Btu) is added between this lagged average temperature and the outside of the below grade wall.~~

~~4.3.3 Deep Walls and Floors~~

~~Walls more than 6 feet below grade and basement floors have an exterior temperature that is typical of deep ground temperatures. These temperatures are given in Table R 4-3 below for each of the sixteen climate zones. In addition, a thermal resistance with an R-value of 13.7 (hr.ft2.°F/Btu) is added between this average temperature and the outside of the below grade wall. For basement floors this added R-value is 17.6 hr.ft2.°F/Btu.~~

~~*Table R4-5 Temperatures for Deep Walls and Floors by Climate Zone*~~

~~Climate Zone~~	~~Deep Ground Temperature~~
~~1~~	~~49.1~~
~~2~~	~~64.5~~
~~3~~	~~62.8~~
~~4~~	~~61.4~~
~~5~~	~~56.8~~
~~6~~	~~64.1~~
~~7~~	~~61.6~~
~~8~~	~~63.9~~
~~9~~	~~66.4~~
~~10~~	~~68.9~~
~~11~~	~~69.5~~
~~12~~	~~67.8~~
~~13~~	~~67.6~~
~~14~~	~~68.6~~
~~15~~	~~74.6~~
~~16~~	~~54.1~~

4.3 Heat Gains and Losses Through Fenestration

4.3.1 ~~4.23~~ Fenestration Products

Information concerning fenestration products, specifically the default table for fenestration ~~U-value~~U-factors and the default table for fenestration SHGC values, is included in Section~~s~~ ~~101 and~~ 116 of Title 24, Part 6~~, the energy efficiency standards for buildings~~.

4.3.2 ~~4.16~~ Solar Gain

Solar gain through glazing shall be calculated using the methods documented in the *Algorithms and Assumptions Report, 1988*. ~~This method is modified, however, for the standards effective after 1998.~~ However, s~~S~~olar gain through windows is reduced to 72~~67.5~~ percent of the full solar gain and a ~~new~~ algorithm is used to calculate the transmitted solar gain as a function of the angle of incidence on the glazing. The 0.~~6~~75~~2~~ ~~reduction~~ multiplier is intended to compensate for exterior shading from landscaping, terrain, and adjacent buildings, as well as dirt and other window obstructions.

The ~~formulas~~ equations used to calculate the solar heat gain through windows as a function of the angle of incidence are given below in the form of two multipliers: - G_{dir} - the ratio of the solar heat gain to the space relative to direct beam insolation at normal incidence, and G_{dif} - the ratio of solar heat gain to the space relative to the diffuse insolation on a horizontal surface. These ratios ~~have no units of measure~~are unitless.

Equation R4-10

$$G_{dir} = SHGC_{fen} * Area * [fsunlit * CosI * P(CosI) + GrndFac]$$

and

Equation R4-11

$$G_{dif} = SHGC_{fen} * Area * DMSHGC * (vfSky + vfGrnd * GrndRf)$$

where

Equation R4-12 $$P(\text{Cos}I) = C1 * \text{Cos}I + C2 * \text{Cos}^2 I + C3 * \text{Cos}^3 I + C4 * \text{Cos}^4 I$$

Equation R4-13 $$\text{GrndFac} = \text{vfGrnd} \times \text{CosG} \times \text{GrndRf} \times \text{DMSHGC}$$

$SHGC_{fen}$ = Fenestration Solar Heat Gain Coefficient at normal beam incidence - primary user input [unitless]

CosI = The cosine of the angle of incidence of the direct beam insolation on the window. [unitless]

CosG = The cosine of the angle of incidence of the direct beam insolation on the ground. [unitless]

DMSHGC = Diffuse Multiplier for Solar Heat Gain Coefficient [unitless]

fsunlit = ~~f~~Fraction of the window sunlit by direct beam at this hour [unitless]

C1, ...,C4 = ~~p~~Polynomial coefficients for angular dependence (cosine of the angle of incidence) of solar heat gain - see Table R4-7~~Table 4-6~~.

vfSky = ~~v~~View factor of window to sky [unitless]

vfGrnd = ~~v~~View factor from window to ground [unitless]

GrndRf = Ground Reflectance [unitless] = 0.20

Table R4-7 – Polynomial Coefficients for Angular Dependence

Glazing Type:	Single Pane (1 light)	More Than One Pane (2 or more ~~lights~~lites)
$SHGC_{fen}$	0.860	0.695
C1	3.549794	1.881643
C2	-4.597536	1.014431
C3	2.432124	-4.009235-
C4	-0.384382	2.113160
DMSHGC	0.905814	0.828777

~~*4.4Shading Calculations*~~

4.3.3 ~~4.4.1~~ Interior ~~Shading~~ and Exterior Shading ~~Sunscreen Operation~~

~~***Standard Design*** & ***Proposed Design***: The standard assumptions for operation of interior shading devices and sunscreens shall apply to both the *Standard Design* run and the *Proposed Design* run.~~

Draperies are assumed to be closed only for hours when the air conditioner operates. To approximate this affect during transitions between periods of operation and non-operation, ACMs may assume that the internal device remains closed for the hour following ~~the period~~ an hour of air conditioner operation. As soon as that hour passes, the internal shading device shall be opened unless the air conditioner continues to run. The internal device shall be either totally open or totally closed for any given hour.

External sunscreens are assumed to be in place all year, whether the building is in a heating or cooling mode.

The shading effects of overhangs, side fins and other fixed shading devices are determined hourly, based on the altitude and azimuth of the sun for that hour, the orientation of the fenestration, and the relative geometry of the fenestration and the fixed shading devices.

The standard assumptions for operation of interior shading devices and sunscreens shall apply to both the *Standard Design* and the *Proposed Design*.

4.3.4 ~~4.4.2~~ Solar Heat Gain Coefficients

~~Solar Heat Gain Coefficients shall be determined according to Chapter 3 of this manual.~~ ACMs use two ~~values for setting the~~ solar heat gain coefficient values~~of shading devices~~: "$SHGC_{open}$ " and "$SHGC_{closed}$." "$SHGC_{open}$ " applies when the air conditioner is not in operation (off) and "$SHGC_{closed}$ " applies when the air conditioner is in operation. The ACM user shall not be allowed to enter values for $SHGC_{open}$ and $SHGC_{closed}$. ~~These values must be automatically calculated from the specification of the SHGC for the fenestration ($SHGC_{fen}$), the exterior shade and the interior shade as described below. ACMs shall forbid users from direct entry of SHGCs for interior and exterior shading devices.~~ The ACM ~~must~~shall automatically determine these values from the user's choices of exterior shading devices and from the assumption that vertical glazing has a drapery and non-vertical (skylight) glazing has no interior shading device.

There are a limited set of shading devices with fixed prescribed characteristics that are modeled in the performance approach. These devices and their associated fixed solar heat gain coefficients are listed in ~~Table R 3-2 and Table R 3-3~~Table R3-5 and Table R3-7.

The formula for combining solar heat gain coefficients is:

Equation R4-14

$$SHGC_{comb} = [(0.2875 \times SHGC_{max}) + 0.75] \times SHGC_{min}$$

where

$SHGC_{comb}$ = the combined solar heat gain coefficient for a fenestration component and an attachment in series.

$SHGC_{max}$ = the larger of $SHGC_{fen}$ and $SHGC_{dev}$

$SHGC_{min}$ = the smaller of $SHGC_{fen}$ and $SHGC_{dev}$

where

$SHGC_{fen}$ = the solar heat gain coefficient of the fenestration which includes the window glazing, transparent films and coatings, and the window framing, dividers and muntins,

$SHGC_{dev}$ = the solar heat gain coefficient of the interior or exterior shading device when used with a metal-framed, single pane window.

For $SHGC_{closed}$, the combination SHGC, $SHGC_{fen+int}$, (the combined SHGC for the fenestration and the interior device) is calculated first and then the combination $SHGC_{fen+int+ext}$ is calculated to determine the overall $SHGC_{closed}$. $SHGC_{open}$ is determined from the combination of $SHGC_{fen}$ and $SHGC_{ext}$.

~~The combination $SHGC_{fen+int}$ is calculated as above for the *Standard Design* when the Package D specification for SHGC is No Requirement with SHGC = NR (No Requirement) set to a default SHGC of 0.70, which is typical of a double pane, metal-framed window.~~

~~$SHGC_{fen+int}$ = [($SHGC_{fen}$ x 0.2875) + 0.75] x $SHGC_{drap}$~~

~~or~~

~~$SHGC_{fen+int}$ = [(0.70 x 0.2875)+0.75] x 0.68 = [0.95125] x 0.68 = 0.64685~~

~~With the effects of the exterior shade,~~

~~$SHGC_{fen+ext}$ = [($SHGC_{ext}$ x 0.2875) + 0.75] x $SHGC_{fen+int}$~~

~~or~~

~~$SHGC_{closed}$ = $SHGC_{fen+int+ext}$ = [(0.76 x 0.2875)+0.75] x 0.64685~~

~~= [0.9685] x 0.64685 = 0.626 and~~

~~$SHGC_{open}$ = $SHGC_{fen+ext}$ = [(0.76 x 0.2875)+0.75] x 0.70~~

~~= [0.9685] x 0.70 = 0.678~~

4.4 Thermal Mass~~4.7~~

ACMs shall be capable of modeling thermal mass in buildings. Thermal mass has the ability to store heat and thus damp temperature fluctuations in the conditioned space. There are two types of thermal mass, *Light Mass* which reacts very quickly to absorb or release heat, and *Heavy Mass* which reacts more slowly. *Light Mass* is ~~***Standard Design*** & ***Proposed Design***: Thermal mass is~~ modeled in the same way for ~~in~~ both the *Proposed Design* and the *Standard Design*. The modeled mass includes ~~the basic~~ common elements ~~thermal mass~~ such as framing, furniture, ~~0.5~~½ in.~~"~~ ~~sheetrock~~gypsum board, and household appliances. ~~as "light" mass elements~~ Light mass is modeled through an input in the reference program called building heat capacity and is assumed to be fixed at 3.5 Btu/ºF-ft² of conditioned floor area for both the *Proposed Design* and the *Standard Design*. Other values may be used for unconditioned zones (see Chapter 6).

~~and specific~~ "~~heavy~~Heavy" mass includes elements such as concrete slab floors, masonry walls, double gypsum board and other special mass elements. When the *Proposed Design* qualifies as a high mass building then each element of heavy mass is modeled in the *Proposed Design*, otherwise, the *Proposed Design* is modeled with the same h~~This modeled thermal mass has the ability to store heat and thus damp temperature fluctuations in the conditioned space. The *Proposed Design* and the *Standard Design* must have the same "light" mass elements and for most dwellings the Standard and *Proposed Design*s will also have and model the same "heavy" mass elements.~~eavy thermal mass as the *Standard Design*. See Chapter 3 for details on what qualifies as a high mass building. The default thermal mass for the *Proposed Design* and the fixed thermal mass for the *Standard Design* is based on 20% of the slab floor being exposed and 80% covered with carpet or casework. In addition 5% of the non-slab floor is exposed with a topping of 2 in. of concrete. ACM RB-2005 has procedures for quantifying the value of various types of thermal mass.

~~ACMs must assume that both the *Proposed Design* and *Standard Design* building have a certain amount of minimum "heavy" thermal mass as a function of the conditioned area of slab floor and conditioned nonslab floor. Unless the *Proposed Design* has thermal mass that exceeds a thermal mass minimum threshold, the modeled thermal mass for both the *Proposed Design* and the *Standard Design* is 20% of the *Proposed Design*'s conditioned slab floor area as exposed slab, 80% of the conditioned slab floor area as rug-covered slab, and 5% of the *Proposed Design*'s conditioned nonslab floor area as exposed 2 inch thick concrete.~~

~~The modeled exposed slab floor has the following default characteristics: a thickness of 3.5 inches, a volumetric heat capacity of 28 Btu/ft^3-°F, a conductivity of 0.98 Btu-in/hr-ft^2-°F, a surface conductance of 1.3 Btu/hr-ft^2-°F (no thermal resistance on the surface). The remaining 80% of the conditioned slab floor shall be modeled as covered thermal mass with the same characteristics as the exposed mass, but with the addition of a surface R-value of 2.0 (hr-ft^2-°F)/Btu typical of a carpet and pad.~~

~~Conditioned nonslab floor area shall be modeled with 5% of the nonslab floor area as exposed thermal mass. This thermal mass is modeled in the *Standard Design* with a thickness of 2.0 inches, a volumetric heat capacity of 28 Btu/ft^3-°F, a conductivity of 0.98 Btu-in/hr-ft^2-°F, a surface conductance of 1.3 Btu/hr-ft^2-°F (no added thermal resistance on the surface). The ACM must also model it this way in the *Proposed Design* unless the *Proposed Design* exceeds the thermal mass threshold. The ACM may also require that the user specify a "high mass" or "passive solar" option before allowing the entry of special mass elements and the modeling of thermal mass when the total thermal mass exceeds the high mass threshold.~~

~~*Proposed Design*: The *Proposed Design* may model additional thermal mass when the user selects the ACM's "high mass" building input option by modeling thermal mass in excess of the assumed thermal mass for the *Standard Design* when the equivalent design thermal mass for the *Proposed Design* reaches or exceeds a specific mass threshold. This threshold is determined by the amount of thermal mass equivalent to 30% of the conditioned slab floor area as exposed 3.5" thick concrete slab, 70% of the conditioned slab floor area as rug-covered 3.5" thick concrete slab and 15% of the conditioned raised floor area as 2 inch thick exposed concrete with the same specifications as those given above. To determine the threshold, this mass is converted to a standard Interior Mass Capacity using the Unit Interior Mass Capacity (UIMC) method described in Appendix I and compared to the design mass to determine if the mass threshold is exceeded.~~

~~4.9 Building Heat Capacity~~

~~*Standard Design* & *Proposed Design*: The heat capacity associated with conventional framed construction includes 1/2 inch gypsum board, wall framing and building contents. The building heat capacity is assumed to be fixed at 3.5 Btu/°F per square foot of conditioned floor area. Other values may be used for unconditioned zones (see Chapter 6).~~

~~The assumed value shall apply to the *Standard Design* and shall be the default for the *Proposed Design*.~~

~~*Proposed Design*: The value may be adjusted in the *Proposed Design* run for a user-designated high mass design for special building features such as extra thick gypsum board or heavy mass elements. For such calculations, the surface area of gypsum board shall be assumed to be four times the conditioned floor area. The compliance supplement shall contain recommendations for modifying the building heat capacity, when applicable, and the ACM shall identify the variation in building heat capacity as a special feature of the building. This shall be noted in the "*Special Features and Modeling Assumptions*" listings of the standard reports.~~

~~4.8~~ **Solar Gain Targeting**. ~~***Standard Design* & *Proposed Design*:~~ Solar gains from windows or skylights shall not be targeted to mass elements within the conditioned space of the building. In the reference program, CALRES, all solar gain is targeted to the air or a combined air-and lightweight, high surface area mass node within the building. This modeling assumption is used in both the *Standard Design* run and the *Proposed Design* run, except for sunspaces where the user has flexibility in targeting solar gains subject to certain constraints. Sunspace modeling is an optional capability discussed in ~~Section 6.3~~Chapter 6.

Unconditioned Sunspaces. For compliance purposes, when glazing surfaces enclose unconditioned spaces, such as sunspaces, the user is allowed to target all but 25% of the solar gains from these surfaces to *Heavy* mass elements located within the unconditioned space. Unassigned solar gain is targeted to the air or the combined air/lightweight mass or to high surface area lightweight mass in the unconditioned space. At least 25% of the solar gain from any sunspace fenestration surface ~~must~~shall be targeted to high surface area lightweight mass and/or the air. At most 60% of the solar gain may be targeted to the slab floor of a sunspace, especially in the summer. For compliance purposes, an ACM ~~must~~shall automatically enforce these limits and inform the user of any attempt to exceed these limits.

4.5 Infiltration and Natural Ventilation

~~4.4.1~~4.5.1 Infiltration/Ventilation

The reference method uses the effective leakage area method for calculating infiltration in conditioned zones. Calculations shall use Shielding Class 4 as defined in the 2001 *ASHRAE Handbook of Fundamentals*.

Default Specific Leakage Area. The default specific leakage area (SLA) is 4.9 for designs with ducted HVAC systems and 3.8 for non-ducted HVAC systems. The default is always used for the *Standard Design*. The *Proposed Design* may use an alternate value, but only with diagnostic testing. The specific leakage area (SLA) is the ratio of the effective leakage area to floor area in consistent units. The value is then increased by 10,000 to make the number more manageable. If the effective leakage area (ELA) is known in inches, then the SLA may be calculated with Equation R4-15.

~~The effective leakage area method of calculating infiltration for conditioned zones was implemented with the 1992 standards and is still used, but Shielding Class 4 is used for infiltration wind speed reduction, based on the description in the 1997 *ASHRAE Handbook of Fundamentals*.~~

~~Effective leakage areas with ACMs is specified in terms of a default specific leakage area of 4.9 for designs with ducted HVAC systems and an SLA of 3.8 for nonducted HVAC systems. These Specific Leakage Areas (SLA) are the defaults for the *Proposed Design* and the assumed standard value for the *Standard Design*. The specific leakage area is the ratio of the effective leakage area to the floor area of the building in the same units. The value is increased by 10,000 to provide a more manageable metric.~~

Equation R4-15

$$SLA = \left(\frac{ELA}{CFA}\right)\left(\frac{ft^2}{144in^2}\right)(10000) = \left(\frac{ELA}{CFA}\right)69.444$$

where

ELA = Effective leakage area in square inches

CFA = Conditioned floor area (ft²)

SLA = Specific leakage area (unitless)

Minimum Outside Air.

For both the *Standard Design* and the *Proposed Design*, ACMs shall assume that occupants will open the windows if the ~~house~~ air becomes ~~"too stuffy~~stagnant.~~"~~ When natural ventilation, infiltration, and mechanical ventilation fall below a threshold value of 0.35 air changes per hour (ACH) , the occupants are assumed to open the windows at the beginning of the next hour sufficient to provide ~~an indoor air quality increment which is~~ a combination of infiltration and ventilation equal to ~~an additional~~ 0.35 ~~air changes per hour~~ ACH for an eight foot high ceiling. The windows are assumed to remain partially open ~~and provide this~~ to provide a minimum ~~increment~~ of ~~(~~0.35 ~~air changes per hour)~~ ACH as long as the previous hour's infiltration and ~~,~~ mechanical ~~and natural~~ ventilation rate ~~without this window ventilation for indoor air quality~~ is below the threshold ~~value (see Equations __ through __) Calculation of Infiltration and Ventilation~~.

~~4.5.2Calculation of Infiltration and Ventilation~~

Effective Leakage Area (ELA) Method. The Effective Leakage Area (ELA) method of calculating infiltration for conditioned zones is documented below and in Chapter 26~~5~~ of the ~~1997~~ 2001 ASHRAE Handbook of Fundamentals. The ELA for the *Standard Design* and for the default values for the *Proposed Design* (if diagnostic tests are not used), is calculated ~~using the Conditioned Floor Area (CFA) and the Specific Leakage Area (SLA)~~ from ~~Section 4.16~~ Equation R4-15~~above~~. ~~(The SLA is the ratio of the effective leakage area to the conditioned floor area of the building, in the same units, multiplied by a factor of 10,000 to provide a more manageable metric.)~~ The energy load on the conditioned space from infiltration heat gains or losses are calculated as follows.

Equation R4-16

$$CFM_{infil} = ELA \times \sqrt{A \times \Delta T_2 + B \times V^2}$$

Equation R4-17

$$CFM_{infil+unbalfan} = \sqrt{CFM_{infil}^2 + MECH_{unbal}^2}$$

Equation R4-18

$$CFM_{infil+totfan} = CFM_{infil+unbalfan} + MECH_{bal}$$

The volumetric airflow (cfm) due to natural ventilation is derived from the natural ventilation cooling for the hour:

Equation R4-19

$$CFM_{natv} = \frac{Q_{natv}}{1.08 \times \Delta T_1}$$

The total ventilation and infiltration (in cfm) including indoor air quality window operation is:

Equation R4-20

$$CFM_{total} = CFM_{natv} + CFM_{infil+totfan} + CFM_{iaq}$$

The value of CFM_{iaq} depends on the sum of CFM_{natv} and $CFM_{infil+totfan}$ from the previous time step:

When

Equation R4-21

$$CFM_{natv} + CFM_{infil+totfan} < \frac{(AFT \times CFA)}{7.5}$$

then

Equation R4-22

$$CFM_{iaq} = \frac{(0.35 \times CFA)}{7.5}$$

otherwise

Equation R4-23

$$CFM_{iaq} = 0.000$$

where

CFA = the total conditioned floor area of the residence

AFT = 0.18 for Climate Zones 2 through 15 inclusive, and;

AFT = 0.25 for Climate Zones 1 and 16.

When the windows are opened they provide an overall ventilation rate equal to 0.35 air changes per hour for a residence of the same floor area but with eight foot high ceilings. CFM_{iaq} simulates the opening of windows to achieve an acceptable indoor air quality by the occupants when ventilation and infiltration from other sources does not provide an adequate quantity of outdoor air to dilute pollutants and refresh the indoor air.

The energy load on the conditioned space from all infiltration and ventilation heat gains or losses is calculated as follows:

Equation R4-24

$$Q_{total} = 1.08 \times CFM_{total} \times \Delta T_1$$

where

Q_{total} = Energy from ventilation and infiltration for current hour (Btu)

CFM_{infil} = Infiltration in cubic feet per minute (cfm)

$CFM_{infil+unbalfan}$ = combined infiltration and unbalanced mechanical ventilation in cubic feet per minute (cfm)

$CFM_{infil+totfan}$ = infiltration plus the balanced and unbalanced mechanical ventilation in cubic feet per minute (cfm)

$MECH_{bal}$ = the balanced mechanical ventilation in cfm. This value is the smaller of the total supply fan cfm and the total exhaust fan cfm.

$MECH_{unbal}$ =the unbalanced mechanical ventilation in cfm. This value is derived from the absolute value of the difference between the total supply fan cfm and the total exhaust fan cfm.

1.08 = conversion factor in (Btu-min)/(hr-ft^3-°F)

ΔT_1 = difference between indoor and outdoor temperature for current hour (°F)

ΔT_2 = difference between indoor and outdoor temperature for previous hour (°F)

A = stack coefficient, (cfm^2/in^4/ F)

B = wind coefficient, (cfm^2/in^4/mph^2)

V = average wind speed for current hour (mph)

ELA = effective leakage area (in^2), measured or calculated using -Equation R4-25.

The stack (A) and wind (B) coefficients to be used are shown in Table R4-8. ~~Table 7~~

Table R4-8 – Infiltration Coefficients

~~Table R4-9 – Infiltration Coefficients~~

Coefficient	*One Floor*	*Two Floors*	*Three Floors*
A (stack)	0.0156	0.0313	0.0471
B (wind) (Shielding Class 4)	0.0039	0.0051	0.0060

The ELA is calculated from the SLA as follows:

Equation R4-25

$$ELA = CFA \times SLA \times \left(\frac{144\,in^2}{1ft^2}\right) \times \left(\frac{1}{10{,}000}\right)$$

where

CFA = ____conditioned floor area (ft^2)

SLA = ____specific leakage area (ft^2/ft^2)

ELA = ____effective leakage area (in^2)

Alternatively, ELA and SLA may be determined from blower door measurements:

Equation R4-26

$$ELA = 0.055 \times CFM50_H$$

where

$CFM50_H$ = the measured airflow in cubic feet per minute at 50 pascals for the dwelling with air distribution registers unsealed.

Substituting Equation R4-26 into Equation R4-15 gives the relationship of the measured airflow rate to SLA:

Equation R4-27

$$SLA = 3.819 \times \frac{CFM50_H}{CFA}$$

Reduced Infiltration.

ACM users may take credit for reduced infiltration ~~and~~ (with mechanical ventilation when it is required) for low-rise, single-family dwellings when verified by on-site diagnostic testing. While credit is offered ~~The model for infiltration allows~~ for reduced infiltration, the model ~~entries but~~ also assumes that dwelling occupants will open windows when natural ventilation and infiltration do not provide a minimum of 0.35 ACH. ~~adequate air quality. When infiltration falls below the threshold described in Equation __4.22, ACMs shall assume that occupants open windows in the next hour and add window ventilation to supplement the infiltration and cooling ventilation to achieve an effective air change rate consistent with ASHRAE Standard 62-1989 as described in Equations __4.20 and __4.21.~~

The Effective Leakage Area (ELA) of the dwelling may be reduced and the algorithm will result in less energy use due to infiltration unless windows are opened for ventilation ~~is needed~~. Lower ELAs will result in windows being opened more frequently ~~window ventilation~~ and at some point ~~higher~~ energy use may increase. Air quality ventilation may also be added and if this ventilation plus infiltration and cooling ventilation provides adequate air exchange, window ventilation will no longer occur or will occur very infrequently.~~-~~ The energy use of both ventilation exhaust fans and ventilation supply fans ~~must~~shall be entered. These ventilation fans are

assumed to operate continuously and the energy use of these fans ~~must~~shall be included as energy use in the ~~energy budget calculated for the dwelling~~*Proposed Design*. ~~Except for the set 0.5 SLA reduction credits, b~~Both reduced ELA/SLA and ventilation fans are conditions which require field verification or diagnostic testing ~~by a HERS rater~~ and ~~must~~shall be reported in the ~~*HERS Required*~~*Field Verification and Diagnostic Testing* listings on the Certificate of Compliance ~~and the Computer Method Summary forms~~.

Controlled Ventilation Crawl Spaces and Sunspaces. Controlled ventilation crawl spaces (CVC) and sunspaces are modeled using the air changes per hour method. Modeling of CVC's and sunspaces are optional capabilities covered in ~~Sections 6.1 and 6.3, respectively~~Chapter 6. All optional capabilities that are used in the *Proposed Design* ~~must~~shall be reported in the *Special Features and Modeling Assumptions* listings on the Certificate of Compliance ~~and the Computer Method Summary forms~~.

~~4.5.3~~4.5.2 Natural Ventilation

The natural ventilation model is derived from the ~~1997~~ 2001 ASHRAE Handbook of Fundamentals. The model considers both wind effects and stack effects.

- Wind driven ventilation ~~effects~~ includes consideration of wind speed, prevailing direction and local obstructions, such as nearby buildings or hills.
- Stack driven ventilation ~~effects~~ includes consideration of the temperature difference between indoor air and outdoor air and the difference in elevation between the air inlet and the outlet.

For compliance purposes, the air outlet is always assumed to be 180 degrees or on the opposite side of the building from the air inlet and the inlet and outlet areas are assumed to be equal. The default inlet area (= outlet area) is five percent of the total window area.

~~4.5.4~~*Effective Ventilation Area (EVA)*

Both wind and stack driven ventilation depends linearly on the effective ventilation area (EVA). The EVA is a function of the area of the air inlet and the area of the air outlet. For compliance purposes, the default area of air inlet and outlet are both equal to five per cent ~~(half of the total default standard window opening area)~~ of the total window area, i.e., total ventilation area is 10% of the window area. For compliance purposes a different window opening area~~s~~ may be determined from the areas of different window opening types - fixed, sliders, and hinged windows. ~~For research (as opposed to compliance) purposes, inputs for ACMs may enter separate values for inlet and outlet areas.~~ For compliance purposes, the air inlet and the air outlet are each equal to one-half of the *Free Ventilation Area* ~~described in Section 4.13 below~~.

When the inlet area and outlet area are equal, the EVA is the same, i.e. equal to the inlet area or the outlet area. Hence for compliance purposes the EVA is equal to one-half of the *Free Ventilation Area.*

~~4.5.5~~*Stack Driven Ventilation*

Stack driven ventilation results when there is an elevation difference between the inlet and the outlet, and when there is a temperature difference between indoor and outdoor conditions. See Equation R4-28.

Equation R4-28

$$CFM_S = 9.4 \times EVA \times EFF_S \times \sqrt{H \times \Delta T}$$

~~W~~where~~:~~

CFM_S = Airflow due to stack effects, cfm.

9.4 = Constant ~~from ASHRAE~~.

EVA = Effective ventilation area as discussed above, ft²~~sf~~.

EFF_S = Stack effectiveness.

H = Center-to-center height difference between the air inlet and outlet.

ΔT = Indoor to outdoor temperature difference, °F.

For compliance purposes the stack effectiveness shall be set at 1.0. The ACM user shall not be permitted to alter this value.

~~H = is the ventilation height difference. See Section 4.14 for details.~~

~~4.5.6~~Wind Driven Ventilation

The general equation for wind driven ventilation is shown below. This equation works in either a direction dependent implementation or a direction independent implementation, as explained later in the text.

Equation R4-29

$$CFM_w = EVA \times 88 \times MPH \times WF \times EFF_o \times EFF_d$$

~~Where~~where~~:~~

CFM_W = Ventilation due to wind, cfm.

EVA = Effective vent area as discussed above, ~~sf~~ft^2.

88 = A constant that converts wind speed in mph to wind speed in feet per minute.

MPH = Wind speed from the weather tape, mph.

WF = A multiplier that reduces local wind speed due to obstructions such as adjacent buildings. This input is fixed at 0.25 for compliance calculations.

EFF_O = Effectiveness of opening used to adjust for the location of the opening in the building, e.g. crawl space vents. This accounts for insect screens and/or other devices that may reduce the effectiveness of the ventilation opening. This input is also used to account for the location of ventilation area, e.g. the exceptional method for two-zone crawl space modeling provides for an alternative input for EFF_O. This input is fixed at 1.0 for compliance calculations other than crawlspace modeling.

EFF_d = Effectiveness that is related to the direction of the wind relative to the inlet surface for each hour. ASHRAE recommends that the effectiveness of the opening, *EFF_d*, be set to between 0.50 and 0.60 when the wind direction is perpendicular or normal to the inlet and outlet. A value of 0.25 to 0.35 is recommended for diagonal winds. When the wind direction is parallel to the surface of the inlet and outlet, *EFF_d* should be zero.

~~WF is the wind correction factor; this input is fixed at 0.25 for compliance calculations.~~

~~The effectiveness of the ventilation opening, *EFF_e*, is used to account for insect screens and/or other devices that may reduce the effectiveness of the ventilation opening. This input is also used to account for the location of ventilation area, e.g. the exceptional method for two zone crawl space modeling provides for an alternative input for EFF_e. This input is fixed at 1.0 for compliance calculations other than crawlspace modeling.~~

~~ASHRAE recommends that the effectiveness of the opening, *EFF_e*, be set to between 0.50 and 0.60 when the wind direction is perpendicular or normal to the inlet and outlet. A value of 0.25 to 0.35 is recommended for diagonal winds. When the wind direction is parallel to the surface of the inlet and outlet, *EFF_e* should be zero.~~

For compliance calculations, the orientation of the inlet and outlet is not considered. ACMs shall assume that the wind angle of incidence at 45 degrees on all windows and only the wind speed dependence is maintained. In this case, the product of *EFF_o* and *EFF_d* is equal to 0.28 regardless of the direction of the wind.

~~4.5.7~~Combined Wind and Stack Effects

Stack effects and wind effects are calculated separately and added by quadrature, as shown below. This algorithm always adds the absolute value of the forces; that is, wind ventilation never cancels stack ventilation even though in reality this can happen.

Equation R4-30

$$CFM_t = \sqrt{CFM_w^2 + CFM_s^2}$$

~~W~~where:

CFM_t = Total ventilation rate from both stack and wind effects, cfm.

CFM_w = Ventilation rate from wind effects, cfm.

CFM_s = Ventilation rate from stack effects, cfm.

~~4.5.8~~Determination of Natural Ventilation for Cooling

The value of CFM_t described in Equation R4-30~~Equation 4.10~~ above gives the maximum potential ventilation when the windows are open. Natural ventilation is available during cooling mode when there is venting shown in Table R4-1. The amount of natural ventilation used by ACMs for natural cooling is the ~~lessor~~ lesser of this maximum potential amount available and the amount needed to drive the interior zone temperature down to the natural cooling setpoint temperature when natural cooling is needed and available. When natural cooling is not needed or is unavailable no natural ventilation is used. ACMs shall assume that natural cooling is needed when the building is in “cooling mode” and when the outside temperature is below the estimated zone temperature and the estimated zone temperature is above the natural cooling setpoint temperature. Only the amount of ventilation required to reduce the zone temperature down to the natural ventilation setpoint temperature is used and the natural ventilation setpoint temperature ~~must~~shall be constrained by the ACM to be greater than the heating setpoint temperature.

~~***Free Ventilation Area***~~

~~Free ventilation area is the adjusted area taking into account bug screens, window framing and dividers, and other factors.~~

~~***Standard Design***: The *Standard Design* value for free ventilation area is 10% of the fenestration area (rough frame opening). This value is also used for the window Opening Type *Slider*. The approved ACM compliance manual shall note that fenestration opening type *Slider* also may be selected by the user or automatically used by the ACM as a default or “*Standard*” opening type. This is based upon the assumption that approximately 40% of the rough frame opening is available for ventilation. Half of this area is considered an air inlet and half an air outlet. This value shall always be used for the *Standard Design* run. It is also the default for the *Proposed Design* run.~~

~~***Proposed Design***: Other values may be used in the *Proposed Design* run only when special windows are installed, high mass is installed, and the “high mass” input option is selected [or the ACM determines that *Proposed Design’s* thermal mass exceeds the mass threshold]. The free ventilation area is assumed to be 20% of the fenestration area for hinged type windows such as casements, awnings, hoppers, patio doors and French doors that are capable of a maximum ventilation area of approximately 80% of the rough frame opening. If the ACM user increases the ventilation area for hinged type windows, the ACM must also consider the possible effect of fixed glazing in the building which has no free ventilation area (window opening type *Fixed*). The ACM user may account for additional free ventilation area by entering the total area for sliding windows, the total area for hinged windows, and the total area of fixed windows in the “high mass” menu of the ACM. The ACM must verify that the total area entered for these three types is the same as the total area of windows calculated elsewhere or the ACM may determine the area of fixed windows by subtracting the slider window area and the hinged window area from the total window area if it is less than the total window and skylight area. If the total window and skylight area is less than the area specified for sliding windows and~~

~~hinged windows the ACM must reduce the area of hinged windows by the difference. The total ventilation area is calculated from the areas of the three possible fenestration opening types, as shown below:~~

~~Equation 4.32~~ $\cancel{Vent_{Area} = (Area_{Slider} \times 0.1) + (Area_{Hinged} \times 0.2) + (Area_{Fixed} \times 0.0)}$

~~The ACM's ability to accept a customized ventilation area is an optional capability. When this optional capability is used, the fact that the user entered a customized free ventilation area and the total areas of each of these three fenestration opening types must be reported in the *Special Features and Modeling Assumptions* listings on the CF-1R and C-2R. Note that the maximum free ventilation area that may be modeled by any ACM for compliance purposes is 20% of the total area of windows and skylights assuming that all windows and skylights are hinged.~~

~~*4.5.10Ventilation Height Difference*~~

~~***Standard Design***: The *Standard Design* modeling assumptions for the elevation difference between the inlet and the outlet is two feet for one story buildings and eight feet for two or more stories.~~

~~***Proposed Design***: For the *Proposed Design* run, the assumption is the same as the *Standard Design* except that greater height differences may be used with special ventilation features such as high, operable clerestory windows. In this case the height difference is the height between the average center height of the lower operable windows and the average center height of the upper operable windows. Such features must be fully documented on the building plans and noted on the ACM standard reports in the *Special Features and Modeling Assumptions* listings as a condition that requires special verification.~~

~~*4.5.11*~~*Wind Speed and Direction*

~~***Standard Design*** & ***Proposed Design***:~~ Wind speed affects the infiltration rate and the natural ventilation rate. The infiltration and ventilation rate in the reference method accounts for local site obstructions. For infiltration in the reference method this is done by using Shielding Class 4 coefficients ~~in the Sherman-Grimsrud equation~~ (~~Section 4.17.1, Equation 4.17~~ see 2001 ASHRAE Fundamentals, Chapter 26) to determine the stack and wind driven infiltration and ventilation. This Shielding Class determination was made on the basis of the description of the Shielding Classes given in the ~~1997~~ 2001 ASHRAE ~~Handbook of~~ Fundamentals~~, Table 7, Page 25.22. For Shielding Class 4 the description~~ which reads as follows:

> Heavy shielding; obstructions around most of the perimeter, buildings or trees within 30 feet in most directions; typical suburban shielding.

~~For natural ventilation in t~~The reference method, CALRES, adjusts the wind speed used in calculations ~~is adjusted for differences between the measured wind speed height and the inlet opening height and local obstructions by using a wind factor (~~through a WF ~~in Equation 4.9)~~ of 0.25. See Equation R4-29.

4.6 Heating Systems

ACMs shall use the following inputs and algorithms to calculate heating energy use.

Equation R4-32

$$NetHLoad_{hr} = \frac{HLoad_{hr} \times HDEM_{hr}}{\eta_{seasonal,dist}}$$

where

$NetHLoad_{hr}$ = The net heating load that the heating equipment sees. This accounts for air distribution duct losses. If there are no air distribution ducts then NetHLoad = $HLoad_{hr}$.

$HLoad_{hr}$ = Space heating load for the hour from the ACM simulation, Btu.

$\eta_{seasonal,\ dist}$ = Seasonal distribution system efficiency for the heating season from Equation R4.

$HDEM_{hr}$ = Heating duct efficiency multiplier for the hour calculated from Equation R4-66. This value varies with each hour depending on outdoor temperature. A value of 1.00 (no hourly adjustment) is used unless the supply ducts are located in the attic. .

4.6.1 Furnaces and Boilers

Once the net heating load is known, heating energy for gas fired equipment is calculated each hour by dividing the net heating load for that hour by the AFUE. There are no hourly adjustments for part load conditions or temperature dependencies.

Equation R4-33

$$FurnFuel_{hr} = \frac{NetHLoad_{hr}}{AFUE_{eff}}$$

where

$AFUE_{Eff}$ = Annual fuel utilization efficiency. This is a constant for the year.

$NetLoad_{hr}$ = The hourly load calculated from Equation R4-32 and using algorithms similar to those described in this chapter.

4.6.2 Heat pump and Electric Furnace

The reference ACM has a heat pump model which takes account of outdoor temperature. The model uses the following inputs.

HSPF = Rated Heating Seasonal Performance Factor

EIR47 = Defaults to 1/(0.4*HSPF)

Cap47 = Rated compressor heating capacity at 47 F. Defaults to rated cooling capacity.

If the heat pump compressor is not large enough to meet the load in the hour, the ACM assumes there is sufficient backup resistance heat. In the case of an electric furnace, the load shall be met entirely by resistance heat. For heat pumps, the ACM shall calculate the hourly heating electricity consumption in kWh using the DOE2.1E heat pump algorithm.

For equipment without an HSPF rating, the HSPF may be calculated as:

Equation R4-34

$$HSPF = (3.2 \times COP) - 2.4$$

~~4.6~~4.6.3 ~~Heating Equipment and~~ Air Distribution Fans

~~The efficiency of fossil-fuel-fired heating equipment (furnaces, boilers, etc.) is rated as an Annual Fuel Utilization Efficiency (AFUE) .~~ The test method for calculating AFUE ignores electric energy used by air distribution fans and the contribution of the fan motor input to the heating output. ~~The fan energy is calculated at the rate of 0.005 watt-hours per Btu of heat delivered by the equipment.~~

With TDV, electric energy shall be calculated separately from gas energy. For forced-air heating systems, ACMs shall calculate fan energy at the rate of 0.005 watt-hours per Btu of heat delivered by the equipment. The vast majority of residential furnaces have the fan motor in the air stream so the heat generated by the motor contributes to heating the house. This effect may be considered in calculating the TDV energy for heating.

~~The heating source energy may be calculated using an effective AFUE which accounts for both the heat contribution of the fan and the source energy used by the fan. The effective AFUE is a similar number to the seasonal efficiency used in pre 1992 ACMs.~~

~~Equation 4.33~~

$$AFUE_{eff} = \frac{1 + 0.005(3.413)}{\frac{1}{AFUE} + 0.005(10.239)}$$

~~The effective AFUE is used for all furnaces and boilers that use ducted distribution systems.~~

~~4.6.3Commission Equivalent Efficiencies~~

~~The approved ACM compliance supplement must include the following conversion and substitution:~~

~~For equipment without an HSPF rating, the HSPF may be calculated as:~~

~~Equation 4.34~~ ~~HSPF = (3.2 x COP) - 2.4~~

~~The EER may be used in lieu of the SEER for equipment not required to be tested for an SEER rating.~~

~~*4.6.1Duct Efficiency*~~

~~The Commission has approved algorithms and procedures for determining duct and HVAC distribution efficiency. Details are presented in Appendix RF.~~

~~There are two calculation procedures to determine seasonal air distribution efficiency using either 1) default input assumptions or 2) diagnostic measurement values. Air distribution efficiencies for heating and cooling shall be calculated separately. The ACM shall require the user to choose values for the following parameters to calculate seasonal duct efficiencies as shown below. The ACM shall use the defaults shown in [brackets] for the *Standard Design*.:~~

1. ~~Location of the duct system [ducts in the attic]~~
2. ~~Insulation level of ducts [R 4.2]~~
3. ~~The surface area of ducts or separate supply and return surface areas [27% of conditioned floor area (CFA) for supply duct surface area; 5% CFA for return duct surface area in single story dwellings and 10% CFA for return duct surface area in dwellings with two or more stories] or the installer measured and HERS rater verified reduced surface area of supply ducts in conjunction with ACCA Manual D design and installer measured and HERS rater verified fan flow consistent with the ACCA Manual D design as specified in 5. below.7.68~~
4. ~~The leakage level of the duct system [6% of fan flow]. Two values are possible for the proposed design: 6% of fan flow if installer measured and HERS rater verified at no more than 6% of fan flow, otherwise 22% of fan flow shall be used.~~
5. ~~ACCA manual D design, duct layout and system fan flow [No]. This requires that engineering calculations and a duct layout have been prepared as part of the building plans and that system fan flow specified in those calculations be installer measured and HERS rater verified.~~
6. ~~Designation for systems with less than 12 feet of duct outside conditioned space [No].~~
7. ~~Attic duct efficiency with radiant barrier in accordance with Package D requirements [Yes in climate zones where required by Package D, otherwise No].~~

~~When any duct efficiency credit is claimed beyond the default assumptions that requires diagnostic testing or verification by a HERS rater or the local enforcement agency, i.e. when non-default values (except HVAC equipment capacities) are used to determine duct efficiency, the leaks in the air distribution system connections shall not be sealed with cloth back rubber adhesive duct tapes unless such tape is used in combination with mastic and drawbands and this requirement must be specified in the *Special Features and Modeling Assumptions* listings and the *HERS Required Verification* listings on the CF-1R and the C-2R.~~

~~The ACM shall automatically use the following values from the description of the *Proposed Design* when calculating the distribution system efficiency:~~

~~□Number of stories~~

~~□Building Conditioned Floor Area~~

~~□Building Volume~~

~~□Floor Type~~

~~□Presence of attic radiant barrier or cool roof~~

~~□Presence of insulation between floor above crawlspace or unconditioned basement, and on or within crawlspace or basement walls adjacent to outside conditions or the ground below~~

~~□Outdoor summer and winter design temperatures for each climate zone~~

~~When more than one HVAC system serves the building or dwelling, the HVAC distribution efficiency is determined for each system and an conditioned floor area weighted average seasonal efficiency is determined based on the inputs for each of the systems.~~

~~When an existing HVAC system is extended to serve an addition, the default assumptions for duct and HVAC distribution efficiency must be used for both the *Proposed Design* and the *Standard Design*. However, when a new, high efficiency HVAC distribution system is used to serve the addition or the addition and the existing building, that system may be modeled to receive energy credit subject to diagnostic testing and verification of proper installation by a HERS rater.~~

~~*4.22 Slab Heat Loss (F2 Factor)*~~

~~See Section 4.7.1.~~

~~4.6~~4.7 Air Conditioning Systems

Air conditioning systems shall be sized, installed, tested and modeled according to the provisions of this section.

4.7.1 Cooling System Energy

The reference ACM calculates the hourly cooling electricity consumption in kWh using Equation R4-35. In this equation, the energy for the air handler fan and the electric compressor or parasitic power for the outdoor unit of a gas ~~fired~~ absorption air conditioner are combined. The ACM calculates the hourly cooling gas consumption in therms using Equation 4-36 ~~fan and the compressor are combined~~.

Equation R4-35

$$AC_{kWh} = \frac{Fan_{Wh} + Comp_{Wh} + PPC_{Wh}}{1{,}000}$$

Equation 4-36

$$AC_{therms} = \frac{Absorption_{Btu}}{100{,}000}$$

where

AC_{kWh}= Air conditioner kWh of electricity consumption for a particular hour of the simulation. This value is calculated for each hour, combined with the TDV multipliers, and summed for the year.

Fan_{Wh}= Fan watt-hours for a particular hour of the simulation. See Equation R4-49.

$Comp_{Wh}$= Compressor watt-hours for a particular hour of the simulation. This is calculated using Equation R4-37.

PPC_{Wh}= Parasitic Power watt-hours for gas ~~fired~~ absorption air conditioners for a particular hour of the simulation. This is calculated using Equation R4- 44~~X2~~.

AC_{therms}= Air conditioner therms of gas consumption for a particular hour of the simulation. This value is calculated for each hour, combined with the TDV multipliers, and summed for the year.

$Absorption_{Btu}$= Gas consumption in Btu for absorption air conditioners for a particular hour of the simulation. This is calculated using Equation R4-43~~X1~~.

~~4.7.7~~Electric Compressor Systems

The reference method calculates the energy for electrically driven compressors using the algorithms described in this section.

Compressor watt-hours for a particular hour of the simulation shall be calculated using Equation R4-37.

Equation R4-37

$$Comp_{wh} = \frac{CLoad_{hr} \times CDEM_{hr}}{\eta_{seasonal,dist} \times CE_t} + \frac{Fan_{wh} x3.413}{CE_t}$$

where

$CLoad_{hr}$ = Space sensible cooling load for the hour from the ACM simulation (Btu).

$CDEM_{hr}$ = Cooling Duct Efficiency Multiplier for the hour calculated from Equation R4-66. This value varies with each hour depending on outdoor temperature. A value of 1.00 is used unless the supply ducts are located in the attic.

$\eta_{seasonal,\ dist}$ = Seasonal distribution system efficiency for the cooling season from Equation R4-55

$$\eta_{dist,seasonal} = 0.98\ DE_{seasonal} \times F_{recov}$$

CE_t = Sensible energy efficiency at a particular outdoor dry bulb temperature. This is calculated using Equation R4-38 below.

Fan_{wh} = Fan watts this hour. This is calculated using Equation R4-49.

Equation R4-38

$$CE_t = EER_t \times (0.88 + 0.00156 \times (DB_t - 95))$$

where

DB_t = Outdoor dry bulb temperature taken from the CEC weather file.

EER_t = Energy efficiency ratio at a particular dry bulb temperature. EER_t is calculated using Equation R4-39 below.

Equation R4-39

When

$DB_t < 82$ ºF	$EER_t = SEER_{nf}$
$82 \le DB_t < 95$	$EER_t = SEER_{nf} + ((DB_t - 82)*(EER_{nf} - SEER_{nf}) / 13)$
$DB_t \ge 95$	$EER_t = EER_{nf} - (DB_t - 95) * 0.12$

where

$SEER_{nf}$ = Seasonal energy efficiency ratio without distribution fan consumption ("nf" = no fans), but adjusted for refrigerant charge and airflow. This is calculated using Equation R4-40.

EER_{nf} = Energy efficiency ratio at ARI conditions without distribution fan consumption ("nf" = no fans), but adjusted for refrigerant charge and airflow. This is calculated using Equation R4-41.

Equation R4-40

$$SEER_{nf} = \left(1.0452 \times SEER + 0.0115 \times SEER^2 + 0.000251 \times SEER^3\right) \times F_{txv} \times F_{air} \times F_{size}$$

Equation R4-41 $$EER_{nf} = \left(1.0452 \times EER + 0.0115 \times EER^2 + 0.000251 \times EER^3\right) \times F_{txv} \times F_{air} \times F_{size}$$

where

SEER = Seasonal energy efficiency ratio for the air conditioner. The EER shall be used in lieu of the SEER for equipment not required to be tested for a SEER rating.

EER = Energy efficiency ratio at ARI test conditions, if not input, then values are taken from Equation R4-42.

F_{txv} = The refrigerant charge factor, default = 0.9. For systems with a verified TXV (ACM RI-2005) or verified refrigerant charge (ACM RD-2005), the factor shall be 0.96.

F_{air} = The system airflow factor, default = .925. For systems with airflow verified according to 4.7.4, F_{air} shall be 1.00.

F_{size} = Compressor sizing factor, default = 0.95. For systems sized according to the Maximum Cooling Capacity for ACM Credit (see Section 4.7.2), the factor shall be 1.0.

Equation R4-42

When

SEER <11.5 EER = 10 - (11.5 - SEER) x 0.83

SEER >= 11.5 EER = 10

Gas Absorption Systems

To determine the electric and gas energy use of gas ~~fired~~ absorption air conditioning systems the algorithms described in this section should be used.

Equation R4-43 $$Absorption_{Btu} = \frac{CLoad_{hr} \times CDEM_{hr}}{\eta_{seasonal,dist} \times AE_t} + \frac{Fan_{wh} x3.413}{AE_t}$$

Equation R4-44 $$PPC_{wh} = \frac{CLoad_{hr} \times CDEM_{hr}}{\eta_{seasonal,dist} \times PE_t}$$

where:

$CLoad_{hr}$ = Space sensible cooling load for the hour from the ACM simulation (Btu).

$CDEM_{hr}$ = Cooling Duct Efficiency Multiplier for the hour calculated from Equation R4-66. This value varies with each hour depending on outdoor temperature. A value of 1.00 is used unless the supply ducts are located in the attic.

$\eta_{seasonal, dist}$ = Seasonal distribution system efficiency for the cooling season from Equation R4-55.

AE_t = Sensible energy efficiency of the gas ~~fired~~ absorption~~ber~~ system at a particular outdoor dry bulb temperature. This is calculated Equation R4-45~~52~~ using below.

PE_t = Sensible energy efficiency of the parasitic power at a particular outdoor dry bulb temperature. This is calculated using Equation R4-46~~46~~ below.

Fan_{wh} = Fan watts this hour. This is calculated using Equation R4-49~~45~~.

Equation R4-45 $$AE_t = COP_t \times \left(0.88 + 0.00156 \times \left(DB_t - 95\right)\right)$$

Equation R4-46 $$PE_t = PEER_t \times (0.88 + 0.00156 \times (DB_t - 95))$$

where

DB_t = Outdoor dry bulb temperature taken from the CEC weather file.

COP_t = COP (coefficient of performance for the gas consumption) of the gas absorption~~ber~~ system at a particular dry bulb temperature calculated using Equation R4-47~~54~~.

$PEER_t$ = PEER (parasitic electricity energy efficiency for the ~~outdoor~~ gas absorption~~ber~~ system) at a particular outdoor dry bulb temperature calculated using Equation R4-48~~X6~~.

Equation R4-47

$DB_t < 83$ ºF	$COP_t = COP82$
$83 < DB_t < 95$	$COP_t = COP82 + ((DB_t - 82)*(COP95 - COP82) / 13)$
$DB_t > 94$	$COP_t = COP95 - (DB_t - 95) * 0.00586$

Equation R4-48

$DB_t < 83$ ºF	$PEER_t = PEER82$
$83 < DB_t < 95$	$PEER_t = PEER82 + ((DB_t - 82)*(PEER95 - PEER82) / 13)$
$DB_t > 94$	$PEER_t = PEER95 - (DB_t - 95) * 0.00689$

where

CAP95= Rated capacity of the gas ~~fired~~ absorption~~ber~~ system, Btuh, input by the compliance user

COP95 = Rated COP of the gas ~~fired~~ absorption~~ber~~ system, input by compliance user

PPC = Parasitic electric energy ~~ratio~~ at rated conditions, W, input by compliance user

COP82 = COP95 * 1.056

PEER95= CAP~~Cap~~95 / PPC, Btu ~~BTU~~ / Wh

PEER82= PEER95 * 1.056

~~4.7.8~~ *Fan Energy for Cooling*

While in a cooling mode, the fan energy associated with the air conditioner is calculated separately from the compressor energy according to Equation R4-49. Calculations are performed hourly.

Equation R4-49 $$Fan_{wh} = \frac{FanW/Btu \times CLoad_{hr} \times CDEM_{hr}}{\eta_{seasonal,dist}}$$

where

FanW/Btu = Fan watts per Btu of rated cooling capacity. This defaults to 0.015 W/Btu. The default value shall be used for the Standard design. Alternate FanW/Btu may be used in ACM calculations for the Proposed design if the actual installed fan watts are less than or equal to the simulation

value based on measurements certified by the installer and verified by a rater using the procedure in ACM RF-2005.

$\eta_{seasonal, dist}$ = Seasonal distribution system efficiency for the cooling season from Equation R4-55.

4.7.2 Compressor Sizing

The Design Cooling Capacity shall be calculated using the procedure in ACM RF-2005. The Maximum Cooling Capacity for ACM Credit shall be calculated using the procedure in ACM RF-2005. For ACM energy calculations all loads are assumed to be met in the hour they occur regardless of the compressor size.

Correctly sized systems installed so they operate at full capacity are desirable because oversized cooling systems have been shown to result in larger peak electrical demands. Systems which have the combination of verified adequate airflow, sealed and tested new duct systems, and proper charge (or alternatively a TXV) and also meet the requirements for Maximum Cooling Capacity for ACM Credit may take credit in ACM calculations by setting the Fsize factor (see Equation R4-40 and Equation R4-41) to 0.95. For all other systems the Fsize factor shall be set to 1.0.

4.7.3 Cooling System Refrigerant Charge

Proper refrigerant charge is necessary for electrically driven compressor air conditioning systems to operate at full capacity and efficiency. The presence of a thermostatic expansion valve (TXV) mitigates the impact of charge problems. Field measurements indicate that typical California air conditioning systems are installed without proper charge, and for ACM energy calculations, the F_{txv} factor is set to 0.90 to account for the impact of this condition. If the system without a TXV is properly charged or a TXV is installed, certified and verified according to the procedures of ACM RD-2005 the F_{txv} factor may be set to 0.96 for ACM energy calculations. See Equation R4-40 and Equation R4-41. Credit for refrigerant charge is not available for package systems.

4.7.4 Air Handler Airflow

The efficiency of an air conditioning system is affected by airflow across the evaporator coil. Cooling system airflow is specified in cubic feet per minute per ton (cfm/ton) where one ton of capacity is 12,000 Btu/hour at ARI rated conditions. Cooling airflow is the flow achieved under normal air conditioning operation with the cooling coil wet from condensation.

Adequate Airflow Verification

Verifying adequate airflow is required to allow air conditioning systems to operate at their full efficiency and capacity. Credit may be taken for adequate airflow in ACM calculations by setting the F_{air} factor (see Equation R4-40 and Equation R4-41) to 1.0, but airflow shall be tested, certified and verified using the procedures of ACM RE-2005. When an adequate airflow credit is claimed, the duct design, layout, and calculations shall also be submitted to the local enforcement agency and to a certified HERS rater. Without airflow tests, no credit is allowed for ACM energy calculations and the F_{air} multiplier shall be set to 0.925.

The installer shall measure and certify the airflow. The certified HERS rater shall verify the existence of the duct design layout and calculations, verify that the field installation is consistent with this design, and diagnostically test and verify the airflow rate.

Sufficient Flow for Valid Standard Refrigerant Charge Test

Sufficient airflow is also required to ensure that the refrigerant charge procedure in ACM RD-2005 will produce valid results. Verifying sufficient airflow is a prerequisite for the refrigerant charge test. Either the flow measurement procedure or the temperature split test of ACM RD-2005 may be used to demonstrate Sufficient Airflow.

Air Handler Fan Flow

Table R4-9 shows the criteria used for calculations and measurement of airflow for cooling systems. If a flow test is done using the fan only switch on the air handler, the coil will be dry allowing higher airflow, and the Dry Coil criterion shall be used.

Table R4-9 – Airflow Criteria

Note: All airflows are for the fan set at the speed used for air conditioning.

Test and Condition	Cooling airflow (Wet Coil)	Test Flow if Dry Coil
Default Cooling Airflow	300 cfm/ton	N/A
Flow needed for a valid refrigerant charge test	350 cfm/ton (See Note 1)	400 cfm/ton
Adequate Airflow	400 cfm/ton	450 cfm/ton
Note 1. In lieu of airflow measurements, the system can pass the temperature split test documented in ACM RD-2005.		

4.8 Duct Efficiency

The procedures in this section shall be used to calculate the efficiency of duct systems. For the purposes of duct efficiency calculations, the supply duct begins at the exit from the furnace or air handler cabinet.

4.8.1 Building Information and Defaults

The ACM shall use values for the parameters in Table R4-10 to calculate duct efficiencies. Standard design values and proposed design defaults are also shown. Proposed designs may claim credit for other values using the procedures in the following sections.

Table R4-10 – Duct Efficiency Input Parameters and Defaults

Parameter	Standard Design Value	Proposed Design Default
1. Duct Location	Ducts in the attic	Ducts in the attic
2. Insulation level of ducts	Package D requirement	Mandatory Minimum Requirement
3. The surface area of ducts	27% of conditioned floor area (CFA) for supply duct surface area; 5% CFA for return duct surface area in single story dwellings and 10% CFA for return duct surface area in dwellings with two or more stories.	
4. The leakage level	Sealed and tested.	Untested
5. Fan flow	Default Cooling Airflow (Table R4-9)	
6. Attic radiant barrier.	Yes in climate zones where required by Package D, otherwise No	No radiant barrier

When more than one HVAC system serves the building or dwelling, the HVAC distribution efficiency is determined for each system and a conditioned floor area-weighted average seasonal efficiency is determined based on the inputs for each of the systems.

See Section 3.8 for information on existing HVAC systems that are extended to serve an addition.

Diagnostic inputs may be used for the calculation of improved duct efficiency in the *Proposed Design*. The diagnostics include observation of various duct characteristics and measurement of duct leakage as described in the following sections. These observations and measurements replace those assumed as default values.

4.8.2 Duct Location

Duct location determines the external temperature for duct conduction losses, the temperature for return leaks, and the thermal regain of duct losses. Note that the area of supply ducts located in conditioned space shall be ignored in calculating conduction losses but supply duct leakage is not affected by supply duct location.

Return Duct Location

If return ducts are located entirely in the basement, the calculation shall assume basement conditions for the return duct efficiency calculation. Otherwise, the return duct shall be entirely located in the attic for the purposes of conduction and leakage calculations. Return duct surface area is not a compliance variable.

Default Supply Duct Location

Default supply duct locations shall be as shown in Table R4-11. The supply duct surface area for crawl space and basement applies only to buildings or zones with all supply ducts installed in the crawl space or basement. If the supply duct is installed in locations other than crawl space or basement, the default supply duct location shall be "Other." For houses with 2 or more stories 35% of the default duct area may be assumed to be in conditioned space as shown in Table R4-11. The surface area of supply ducts located in conditioned space shall be ignored in calculating conduction losses. The *Standard Design* building is assumed to have the same number of stories as the *Proposed Design* for purposes of determining the duct efficiency.

Table R4-11 – Location of Default Supply Duct Area

Supply duct location	**Location of Default Supply Duct Surface Area**	
	One story	Two or more story
All in Crawl Space	100% crawl space	65% crawl space 35% conditioned space
All in Basement	100% Basement	65% basement 35% conditioned space
Other	100% attic	65% attic 35% conditioned space

DiagnosticSupply Duct Location

Supply duct location and areas other than the defaults shown in Table R4-11may be used following the procedures of 4.8.5.

4.8.3 Duct Surface Area

The supply-side and return-side duct surface areas shall be treated separately in distribution efficiency calculations. The duct surface area shall be determined using the following methods.

Return Duct Surface Area

Return duct surface area is not a compliance variable and shall be calculated using Equation R4-50.

Equation R4-50 $$A_{r,out} = K_r \times A_{floor}$$

Where K_r (return duct surface area coefficient) shall be 0.05 for one story building and 0.1 for two or more stories.

Default Supply Duct Surface Area

The standard design and default supply duct surface area shall be calculated using Equation R4-51.

Equation R4-51 $$A_{S,out} = 0.27 \times A_{floor} \times K_S$$

Where Ks (supply duct surface area coefficient) shall be 1 for one story building and 0.65 for two or more stories.

Supply Duct Surface Area for Less Than 12 feet of Duct Outside Conditioned Space

For proposed design HVAC systems with air handlers located outside the conditioned space but with less than 12 lineal feet of duct located outside the conditioned space including air handler and plenum, the supply duct surface area outside the conditioned space shall be calculated using Equation R4-52.

Equation R4-52 $$A_{s,out} = 0.027 \times A_{floor}$$

Diagnostic Duct Surface Area

Proposed designs may claim credit for reduced surface area using the procedures in 4.8.5.

4.8.4 Duct System Insulation

General

An air film resistance of 0.7 (h-ft²-°F/Btu) shall be added by the ACM to the insulation R-value to account for external and internal film resistance. For the purposes of conduction calculations in both the Standard and Proposed designs, 85% of the supply and return duct surface shall be assumed to be duct material at it's specified R-value and 15% shall be assumed to be air handler, plenum, connectors and other components at the mandatory minimum R-value.

Standard Design Duct Insulation R-value

Package D required duct insulation R-values shall be used in the Standard design.

Proposed Design Duct Insulation R-value

The default duct wall thermal resistance shall be the mandatory requirement. Higher insulation levels may be used in the proposed design if all the ducts outside conditioned space are insulated to this value or greater. Credit for systems with mixed insulation levels or ducts buried in the attic require the diagnostic procedure in 4.8.5.

4.8.5 Diagnostic Supply Duct Location, Surface Area and R-factor

Credit is available for supply duct systems entirely in conditioned space, with reduced surface area in unconditioned spaces and combinations of higher performance insulation. In order to claim this credit the detailed duct system design shall be documented on the plans, and the installation shall be certified by the installer and verified by a HERS rater. The size, R-value, and location of each duct segment in an unconditioned space and if buried in attic insulation, the information described below shall be shown in the design and entered into the ACM. The ACM shall calculate the area and effective R-value of the duct system in each location using the procedures specified below.

Surface Area and Location

The surface area of each supply duct system segment shall be calculated based on its inside dimensions and length. The total supply surface area in each unconditioned space location (attic, attic with radiant barrier, crawl space, basement, other) shall be the sum of the area of all duct segments in that location. The ACM shall assign duct segments located in "other" locations to the attic location for purposes of calculation. The surface area of supply ducts completely inside conditioned space need not be input in an ACM and is not included in the calculation of duct system efficiency. The area of ducts in floor cavities or vertical chases that are surrounded by conditioned space and separated from unconditioned space with draft stops are also not included.

Effective R-value

The effective R-value of a supply or return duct system constructed entirely of materials of one rated R-value shall be the rated R-value plus the film coefficient. If materials of more than one R-value are used, the area weighted effective R-value shall be calculated by the ACM using Equation R4-53 and including each segment of the duct system which has a different R-value.

Equation R4-53

$$R_{eff} = \frac{(A_1 + A_2 .... + A_N)}{\left[\frac{A_1}{R_1} + \frac{A_2}{R_2} .... + \frac{A_N}{R_N}\right]}$$

where

R_{eff} = Area weighted effective R-value of duct system for use in calculating duct efficiency,(h-ft²-°F/Btu)

A_N = Area of duct segment n, square feet.

R_n = R-value of duct segment n including film resistance, (duct insulation rated R + 0.7), (h-ft²-°F/Btu)

Buried Attic Ducts

Ducts partly or completely buried in blown attic insulation in dwelling units meeting the requirements for High Insulation Quality (ACM RH) and Procedures for Field Verification and Diagnostic Testing of Air Distribution Systems (ACM RC) may take credit for increased effective duct insulation using the following procedure. The duct design shall identify the segments of the duct that meet the requirements for being buried, and these shall be separately input into the ACM. Ducts to be buried shall have a minimum of R-4.2 duct insulation prior to being buried. The ACM shall calculate the correct R-value based on the specified attic insulation R-value, insulation type, and duct size for ducts installed on the ceiling, and whether the installation meets the requirements for deeply buried ducts for duct segments buried in lowered areas of ceiling. Correct installation of the duct system and attic insulation shall be certified by the installer and verified by a certified HERS rater (including that the requirements of ACM RH and ACM RC are met).

Buried Ducts on the Ceiling

The portions of duct runs directly on or within 3.5 inches of the ceiling gypsum board and surrounded with blown attic insulation of R-30 or greater ~~in houses meeting the criteria for High Insulation Quality (ACM RQ)~~ may take credit for increased effective duct insulation as shown in Table R4-12. Credit shall be allowed for buried ducts on the ceiling only in areas where the ceiling is level and there is at least 6 inches of space between the outer jacket of the installed duct and the roof sheathing above. ~~Ducts to be buried shall have R-4.2 insulation installed prior to burial.~~

Deeply Buried Ducts

Duct segments deeply buried in lowered areas of ceiling and covered by at least 3.5" of insulation above the top of the duct insulation jacket may claim effective insulation of R-25 for fiberglass insulation and R-31 for cellulose insulation. ~~The duct system shall identify the segments of the duct which are to be treated as buried and these shall be separately input into the ACM. The ACM shall calculate the correct R-value based on the specified attic insulation R-value, insulation type and duct size. Correct installation of the duct system and attic insulation must be certified by the installer and verified by a HERS rater.~~

Table R4-12 – Buried Duct Effective R-values

	Nominal Round Duct Diameter								
Attic Insulation	4"	5"	6"	7"	8"	10"	12"	14"	16"
	Effective Duct Insulation R-value for Blown Fiberglass Insulation								
R-30	R-13	R-13	R-13	R-9	R-9	R-4.2	R-4.2	R-4.2	R-4.2
R-38	R-25	R-25	R-25	R-13	R-13	R-9	R-9	R-4.2	R-4.2
R-40	R-25	R-25	R-25	R-25	R-13	R-13	R-9	R-9	R-4.2
R-43	R-25	R-25	R-25	R-25	R-25	R-13	R-9	R-9	R-4.2
R-49	R-25	R-25	R-25	R-25	R-25	R-25	R-13	R-13	R-9
R-60	R-25	R-25	R-25	R-25	R-25	R-25	R-25	R-25	R-13
	Effective Duct Insulation R-value for Blown Cellulose Insulation								
R-30	R-9	R-4.2	R-4.2	R-4.2	R-4.2	R-4.2	R-4.2	R-4.2	R-4.2
R-38	R-15	R-15	R-9	R-9	R-4.2	R-4.2	R-4.2	R-4.2	R-4.2
R-40	R-15	R-15	R-15	R-9	R-9	R-4.2	R-4.2	R-4.2	R-4.2
R-43	R-15	R-15	R-15	R-15	R-9	R-4.2	R-4.2	R-4.2	R-4.2
R-49	R-31	R-31	R-15	R-15	R-15	R-9	R-9	R-4.2	R-4.2
R-60	R-31	R-31	R-31	R-31	R-31	R-15	R-15	R-9	R-9

4.8.6 Fan Flow

Default System Fan Flow

The default fan flow for an air conditioner and for heating with a heat pump in all climate zones shall be obtained from Table R4-9.

The default heating fan flow for forced air furnaces for all climate zones shall be calculated as follows:

Equation R4-54 $Q_e = 0.50 \times A_{floor}$

4.8.7 Duct Leakage

Duct leakage factors shown in Table R4-13 shall be used in calculations of delivery effectiveness. Table R4-13 shows default duct leakage factors for dwelling units. Sealed and tested duct systems require the diagnostic leakage test by the installer and verification by a HERS rater meeting the criteria described in ACM RC-2005. The duct leakage factors for sealed and tested new duct systems correspond to sealed duct requirements in newly constructed dwelling units, to entirely new duct systems in existing dwelling units, and to duct systems in alterations and additions that have been sealed to meet the duct leakage requirements of newly constructed buildings. The duct leakage factors for sealed and tested duct systems in existing dwelling units apply only to sealed duct requirements for alterations to existing dwelling units and to extensions of existing duct systems to serve additions. See Section 3.8 for ducts in existing dwelling units that are sealed and tested in conjunction with alterations or additions.

Table R4-13 – Duct Leakage Factors

Case	$a_s = a_r =$
Untested duct systems in homes built prior to June 1, 2001	0.86
Untested duct systems in homes built after June 1, 2001	0.89
Sealed and tested duct systems in existing dwelling units	0.915
Sealed and tested new duct systems	0.96

4.8.8 Seasonal Distribution System Efficiency

ACMs shall use the following algorithms to calculate duct and HVAC distribution efficiency.

The seasonal distribution system efficiency shall be calculated separately for the heating and cooling seasons using Equation R4-55 based on the seasonal delivery effectiveness from Equation R4-56 and the thermal recovery factor from Equation R4-65. Note that $DE_{seasonal}$, F_{recov} shall be calculated separately for cooling and heating seasons. Distribution system efficiency shall be determined using the following equation:

Equation R4-55 $$\eta_{dist,seasonal} = 0.98\, DE_{seasonal} \times F_{recov}$$

where 0.98 accounts for the energy losses from heating and cooling the duct thermal mass. F_{recov} is calculated in Equation R4-65.

4.8.9 Seasonal Delivery Effectiveness

The seasonal delivery effectiveness for heating or cooling systems shall be calculated using Equation R4-56. This value shall be calculated separately for the heating season and the cooling season.

Equation R4-56 $$DE_{seasonal} = a_s B_s - a_s B_s (1 - B_r a_r)\frac{\Delta T_r}{\Delta T_e} - a_s (1 - B_s)\frac{\Delta T_s}{\Delta T_e}$$

where

B_s = Conduction fraction for supply as calculated in Equation R4-57.

B_r = Conduction fraction for return as calculated in Equation R4-58.

ΔT_e = Temperature rise across heat exchanger, ºF. This value changes for heating and cooling modes.

ΔT_r = Temperature difference between indoors and the ambient for the return, ºF. This value changes for heating and cooling modes.

ΔT_s = Temperature difference between indoors and the ambient for the supply, ºF. This value changes for heating and cooling modes.

a_r = Duct leakage factor (1-return leakage) for return ducts. A value is selected from Table R4-13

a_s = Duct leakage factor (1-supply leakage)p for supply ducts. A value is selected from Table R4-13

Equation R4-57 $$B_s = \exp\left(\frac{-A_{s,out}}{1.08 Q_e \times R_s}\right)$$

Equation R4-58 $$B_r = \exp\left(\frac{-A_{r,out}}{1.08 Q_e \times R_r}\right)$$

where

$A_{s,out}$ = Surface area of supply duct outside conditioned space, ft². See Sections 4.8.1, 4.8.2 and 4.8.3.

$A_{r,out}$ = Surface area of return duct outside conditioned space, ft^2. See Sections 4.8.1, 4.8.2 and 4.8.3.

Q_e = Flow through air handler fan at operating conditions, cfm. This is determined from Section 4.7.4.

R_r = The effective thermal resistance of return duct, h ft^2 F/Btu. See Section 4.8.4 and 4.8.5.

R_s = The effective thermal resistance of supply duct, h ft^2 F/Btu. See Section 4.8.4 and 4.8.5.

4.8.10 ~~R~~Climate and Duct Ambient Conditions for Ducts Outside Conditioned Space

Duct ambient temperature for both heating and cooling for different duct locations shall be obtained from Table R4-14. Attic temperatures for houses with radiant barriers also shall be obtained from Table R4-14. Reduction of attic temperature and the reduction in solar radiation effect due to radiant barriers shall only be applied to cooling calculations. The eligibility criteria for radiant barriers is given in Section 4.2.1. Indoor dry-bulb (T_{in}) temperature for cooling is 78°F. The indoor dry-bulb temperature for heating is 70°F.

Table R4-14 – Assumptions for Duct Ambient Temperature (°F)

	Ambient Temperature for Heating, $T_{heat,amb}$			Ambient Temperature for Cooling, $T_{cool,amb}$				
Climate zone	Attic	Crawl Space	Basement	Attic	Attic w/ radiant barrier (supply)	Attic w/ radiant barrier (return)	Crawl Space	Basement
1	52.0	52.2	48.9	60.0	65.4	61.2	54.0	49.1
2	48.0	48.7	56.5	87.0	84.3	84.2	78.0	64.5
3	55.0	54.9	58.3	80.0	79.4	78.2	71.8	62.8
4	53.0	53.1	56.6	79.0	78.7	77.4	70.9	61.4
5	49.0	49.6	52.3	74.0	75.2	73.1	66.4	56.8
6	57.0	56.7	59.9	81.0	80.1	79.1	72.7	64.1
7	62.0	61.1	60.4	74.0	75.2	73.1	66.4	61.6
8	58.0	57.6	60.1	80.0	79.4	78.2	71.8	63.9
9	53.0	53.1	59.6	87.0	84.3	84.2	78.0	66.4
10	53.0	53.1	61.1	91.0	87.1	87.6	81.6	68.9
11	48.0	48.7	59.5	95.0	89.9	91.0	85.1	69.5
12	50.0	50.4	59.3	91.0	87.1	87.6	81.6	67.8
13	48.0	48.7	58.4	92.0	87.8	88.4	82.4	67.6
14	39.0	40.7	55.4	99.0	92.7	94.4	88.7	68.6
15	50.0	50.4	63.4	102.	94.8	96.9	91.3	74.6
16	32.0	34.4	43.9	80.0	79.4	78.2	71.8	54.1

4.8.11 Calculation of Duct Zone Temperatures for Multiple Locations

The temperatures of the duct zones outside the conditioned space are determined in Table R4-14 for seasonal conditions for both heating and cooling. If the ducts are not all in the same location, the duct ambient temperature for use in the delivery effectiveness and distribution system efficiency calculations shall be determined using an area weighted average of the duct zone temperatures.

Equation R4-59

$$T_{amb,s} = \frac{(A_{s,attic} + 0.001)T_{attic} + A_{s,crawl} \times T_{crawl} + A_{s,base} \times T_{base}}{A_{s,out}}$$

Equation R4-60

$$T_{amb,r} = \frac{A_{r,attic}\ T_{attic} + A_{r,crawl} \times T_{crawl} + A_{r,base} \times T_{base}}{A_{r,out}}$$

The return ambient temperature, $T_{amb,r}$, shall be limited as follows:

- For heating, the maximum $T_{amb,r}$ is $T_{in,heat}$.
- For cooling, the minimum $T_{amb,r}$ is $T_{in,cool}$.

4.8.12 Temperature Difference Across Heat Exchanger

The temperature difference across the heat exchanger is determined by Equation R4-61:

For heating:

Equation R4-61 $\Delta T_e = 55$

And Equation R4-62 for cooling:

Equation R4-62 $\Delta T_e = -20$

4.8.13 Indoor to Duct Location Temperature Differences

The temperature difference between the building conditioned space and the ambient temperature surrounding the supply, ΔT_s, and return, ΔT_r, shall be calculated using the indoor and the duct ambient temperatures.

Equation R4-63 $\Delta T_s = T_{in} - T_{amb,s}$

Equation R4-64 $\Delta T_r = T_{in} - T_{amb,r}$

4.8.14 Thermal Regain (F_{regain})

The reduction in building load due to regain of duct losses shall be calculated using the thermal regain factor. The thermal regain factors that are required to be used are provided in Table R4-15.

Table R4-15 – Thermal Regain Factors

Supply Duct Location	Thermal Regain Factor [F_{regain}]
Attic	0.10
Crawl Space	0.12
Basement	0.30
Other	0.10

4.8.15 Recovery Factor (F_{recov})

The recovery factor, F_{recov}, shall be calculated based on the thermal regain factor, F_{regain}, and the duct losses without return leakage.

Equation R4-65

$$F_{recov} = 1 + F_{regain}\left(\frac{1 - a_s B_s + a_s B_s (1 - B_r)\frac{\Delta T_r}{\Delta T_e} + a_s (1 - B_s)\frac{\Delta T_s}{\Delta T_e}}{DE_{seasonal}}\right)$$

4.9 Hourly Attic Duct Efficiency Multipliers

The algorithm in this section shall be used to model the hourly variation in duct efficiency for ducts located in attics. No hourly variation is modeled for ducts located in spaces other than attics. The multipliers are determined as described in Section 4.9.1 below:

4.9.1 Hourly Duct Efficiency Multipliers

The hourly duct efficiency multiplier for ducts in attics shall be calculated for each hour using Equation R4-66 through Equation R4-69.

Equation R4-66

$$DEM_{hr} = 1 + C_{DT} \times \left(\frac{\Delta T_{sol,hr}}{\Delta T_{sol,season}} - 1 \right)$$

Equation R4-67

$$\Delta T_{sol,hr} = T_{solair,hr} - T_{in,hr}$$

Equation R4-68

$$T_{solair,hr} = T_{amb,hr} + \left(\frac{\alpha}{h_o} \right) \times I_{hor,hr} - \Delta T_{sky}$$

Equation R4-69

$$C_{DT} = C_0 + {C_R}/{R_{duct}} + C_L L_{duct}$$

where

DEM_{hr} = The hourly duct efficiency multiplier for ducts located in all locations. This value is calculated for each hour and separately for the heating season ($HDEM_{hr}$) and cooling season ($CDEM_{hr}$).

$T_{solair,\ hr}$ Sol-air temperature, ºF. See Equation R4-68.

$T_{in,hr}$ Indoor air dry-bulb temperature from simulation, °F.

$T_{amb,hr}$ Outdoor air dry-bulb temperature, °F. From the CEC weather file.

ΔT_{sky} Reduction of sol-air temperature due to sky radiation, = 6.5 ºF.

$I_{hor,hr}$ Global solar radiation on horizontal surface, Btu/h-ft². From the CEC weather file.

α Solar absorptivity of roof = 0.50.

h_o Outside surface convection coefficient, = 3.42 Btu/h-ft²-ºF.

$\Delta T_{sol,\ season}$ Energy weighted seasonal average difference between sol-air and indoor temperatures. This is taken from Table R4-17.

R_{duct} Duct insulation R-value, hr ft^2°F/Btu.

L_{duct} Duct leakage as fraction of supply airflow, dimensionless. See Table R4-13.

C_{DT}, C_0, C_R, C_L Regression coefficients. See Table R4-16.

Table R4-16 – Coefficients

		Cooling		Heating	
		Radiant Barrier	No Radiant Barrier	Radiant Barrier	No Radiant Barrier
C_0	(Unitless)	0.0078	0.0186	0.0350	0.0205
C_R	(h-ft²-ºF/Btu)	0.1222	0.0877	0.0794	0.1202
C_L	(Unitless)	0.5480	0.2995	0.0714	0.2655

Table R4-17 – Seasonal Sol-Air Temperature Difference, °F

Climate Zone	Cooling	Heating
1	23.00	-20.01
2	31.69	-23.64
3	23.66	-18.90
4	26.29	-21.13
5	26.02	-20.25
6	23.79	-17.12
7	25.17	-17.16
8	30.89	-19.46
9	32.73	-18.85
10	33.34	-21.53
11	34.24	-24.38
12	34.65	-23.31
13	34.53	-22.92
14	35.29	-25.64
15	33.33	-20.32
16	29.43	-29.86

~~4.94.10~~ Water Heating Calculations ~~Method~~

The water heating budget is the TDV energy that would be used by a system that meets the requirements of the standards (see Section 3.7 for details). The calculation procedure is documented in ACM RG-2005.

~~This section describes the calculation methods to use with residential water heating systems. The equations listed here must be implemented exactly in general purpose ACMs.~~

~~4.21.1Water Heating Energy Use~~

~~The total water heating energy use is the water heating energy use summed over all water heating systems, all water heaters, and all dwelling units being modeled.~~

$$\cancel{WHEU_{tot} = \sum_{k=1}^{M} (WHEU_k \ x \ NmbrWHtr_k)}$$ ~~Equation 4.30~~

~~For the *Proposed Design*, Equation 4.31 applies:~~

$$WHEU_{proposed} = WHEU_{tot} \; x \; \frac{1000}{CFA_{tot}}$$ ~~Equation 4.31~~

$$CFA_{tot} = \sum_{i=1}^{N} CFA_i$$ ~~Equation 4.32~~

~~Where:~~

~~$WHEU_{tot}$ = total water heating energy use~~

~~$WHEU_k$ = water heating energy use for the kth water heating system~~

~~$NmbrWHtr_k$ = number of water heaters in k^{th} water heating system~~

~~CFA_i = conditioned floor area of the ith dwelling unit (ft^2). The CFA is limited to a maximum of 2,500 ft^2~~

~~N = Number of dwelling units.~~

~~4.21.2Water Heating Energy Budget~~

~~The water heating energy budget (WHEB) for a water heating system or a building is determined from the following equation. The budget may be calculated for a system that serves a set of dwelling units or for the entire building. The budget for individual units in a multi-family applications may be expressed as a total, as shown in Equation 4.33.~~

$$WHEB = 0.00485 \times \sum_{i=1}^{N} CFA_i + 16.37N$$ ~~Equation 4.33~~

~~Where CFAi and N are as described in Section 4.21.1~~

~~4.21.3Water Heating Systems~~

~~Water heating distribution systems may serve more than one dwelling unit and may have more than one piece of water heating equipment. The energy used by a water heating system is calculated as the sum of the energy used by each individual water heater in the system. Energy used for the whole building is calculated as the sum of the energy used by each of the water heating systems. To delineate different water heating elements several indices are used.~~

~~i Used to describe an individual dwelling unit. For instance CFA_i would be the conditioned floor area of the ith dwelling unit. "N" is the total number of dwelling units.~~

~~j Used to refer to the number of water heaters in a system. "M" is the total number of water heaters.~~

~~k Used to refer to a water heating system or distribution system. A building can have more than one system and each system can have more than one water heater.~~

~~The following diagrams illustrate some of the cases that are recognized by the Commission water heating method.~~

~~1~~ ~~One distribution system with two water heaters serving a single dwelling unit.~~

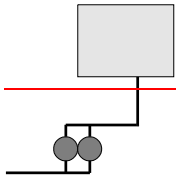

~~2~~ ~~Two distribution systems, each with a single water heater serving a single dwelling unit.~~

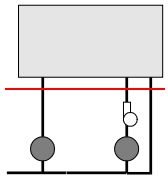

~~3~~ ~~One distribution system with one water heater serving multiple dwelling units.~~

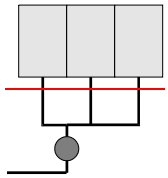

~~4~~ ~~Single distribution system with multiple water heaters serving multiple units.~~

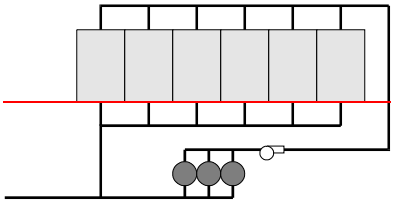

~~5~~ ~~Two distribution systems, one with multiple water heaters serving multiple dwelling units. The recirculating distribution system serves all the units. The other serves only four units.~~

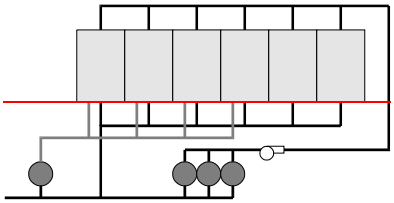

~~The following rules apply to the calculation of water heating system energy use:~~

- ~~1 water heater type per system~~
- ~~1 solar or woodstove credit (but not both) per system~~

~~4.21.4Adjusted Recovery Load (ARL)~~

~~The adjusted recovery load is calculated separately for each water heating distribution system, *k*. It accounts for the number of units served, the size of each unit and the type of distribution system. ARL_k is given by the following equations for the kth distribution system.~~

$$ARL_k = SRL_k \, DSM_k \, SSM_k \qquad \text{Equation 4.34}$$

~~Where~~

~~SRL_k = Standard water heating recovery load of the kth water heating distribution system (million Btu/yr).~~

~~DSM_k =Distribution system multiplier (unitless) for the kth water heating system. A value of one is used for standard distribution systems. (See Table 4-8)~~

~~SSM_k = Solar savings multiplier (unitless) for the kth water heating system. See equation below.~~

~~$SSM_k = 1 - (SSF_k \cdot A)$ Equation 4.35~~

~~SSF_k = Solar savings fraction taken from an f-Chart analysis or other approved method (unitless).~~

~~A = Adjustment to the SSF (unitless). This value is 0.80 to account for pumping energy and piping heat loss effects when these losses are not accounted for in the f-Chart analysis and 1.00 for passive systems (no circulation pump) and systems where pump energy and piping losses were included in the f-Chart analysis. (Piping loss effects are accounted for in the Commission Passive Solar Credit calculation procedure). Approved ACM compliance supplements shall state that pipe losses are not to be accounted for in the f-Chart analysis of active solar water heating systems.~~

~~When a water heating system has more than one water heater, the total load on the system is assumed to be shared equally by each water heater. The ARL for the jth water heater is then shown in the following equation.~~

$$ARL_j = \frac{ARL_k}{NmbrEquip_k}$$ ~~Equation 4.36~~

~~Where~~

~~$NmbrEquip_k$ = The number of water heaters in the kth system.~~

~~4.21.4.1Standard Recovery Load~~

~~The standard water heating recovery load for the kth system is the load assuming a standard distribution system and no solar or wood stove credits. It depends on the size of the dwellings and number of units and is given in the following equation (million Btu/yr).~~

$$SRL_k = \sum_{i=1}^{n} \frac{0.0855347\left(\frac{CFA_i}{1000}\right)^2 + 3.61307\left(\frac{CFA_i}{1000}\right) + 6.036}{NmbrSys_i}$$ ~~Equation 4.37~~

~~Where~~

~~CFAi = Conditioned floor area of the ith dwelling unit served by the water heater (ft^2). The CFA is limited to a maximum of 2,500 ft^2 per dwelling unit.~~

~~n = Number of dwelling units served by the kth water heating system.~~

~~$NmbrSys_i$ = Number of water heating systems that serve the ith dwelling unit. When a dwelling unit is served by more than one system, the assumption is that the load is shared equally by each system.~~

~~4.21.4.2Distribution System Multiplier~~

~~The distribution system multiplier (unitless) is an adjustment for alternative water heating distribution systems. A value of one is used for standard distribution systems. Values for other systems are given in the following table~~

~~*Table R 4-10 - Distribution System Multipliers (DSMs)*~~

~~Distribution System~~		~~DSM - Single Family~~	~~DSM MultiFamily~~
~~Standard~~		~~1.00~~	~~1.00~~
~~POU~~		~~0.82~~	~~na~~
~~HWR~~		~~0.82~~	~~na~~
~~Pipe Insulation~~		~~0.92~~	~~0.92~~
~~Parallel Piping~~		~~0.86~~	~~0.86~~

~~Recirc/NoControl~~		~~1.52~~	~~1.52~~
~~Recirc/Timer~~		~~1.28~~	~~na~~
~~Recirc/Temp~~		~~1.05~~	~~1.05~~
~~Recirc/Demand~~		~~0.98~~	~~na~~
~~Recirc/Time+Temp~~		~~0.96~~	~~na~~
~~Recirc/Demand + HWR~~		~~0.80~~	~~na~~
~~Recirc/Demand + Pipe Insulation~~		~~0.90~~	~~na~~

~~4.21.5Energy Use of Individual Water Heaters~~

~~Once the adjusted recovery load is determined for each water heater, the energy use for each water heater is calculated as described below for each water heater type.~~

~~*4.21.5.1Storage Gas, Storage Electric and Heat Pump Water Heaters*~~

~~The energy use of storage gas, storage electric and heat pump water heaters is given by the following equation.~~

$$WHEU_j = \left[\frac{ARL_j \times HPAF_j}{LDEF_j} \right] WSAF_j \qquad \text{Equation 4.38}$$

~~Where~~

~~$WHEU_j$ = Energy use of the water heater (millions Btu/yr), adjusted for tank insulation and wood stove boilers.~~

~~ARL_j = Adjusted recovery load (millions Btu/yr). Equations for this value are given in Section 4.21.4.~~

~~SEM_j = Source energy multiplier (unitless). This multiplier is 3.0 for electric and heat pump water heaters and 1.0 for gas or oil water heaters.~~

~~$HPAF_j$ = Heat pump adjustment factor from the table below based on climate zone. This value is one for storage gas, storage oil and storage electric water heaters.~~

~~*Table R4-11 - Heat Pump Adjustment Factors*~~

~~Climate Zone~~	~~Heat Pump Adjustment Factor~~	~~Climate Zone~~	~~Heat Pump Adjustment Factor~~
~~1~~	~~1.040~~	~~9~~	~~0.920~~
~~2~~	~~0.990~~	~~10~~	~~0.920~~
~~3~~	~~0.990~~	~~11~~	~~0.920~~
~~4~~	~~1.070~~	~~12~~	~~1.070~~
~~5~~	~~1.070~~	~~13~~	~~0.920~~
~~6~~	~~0.920~~	~~14~~	~~1.040~~
~~7~~	~~0.920~~	~~15~~	~~0.920~~

~~8~~	~~0.920~~	~~16~~	~~1.500~~

~~$LDEF_j$ = The load dependent energy factor (LDEF) is given by the following equation. This equation adjusts the standard EF for different load conditions.~~

$$LDEF_j = \ln\left(\frac{ARL_j \times 1000}{365}\right)\left(a \times EF_j + b\right) + \left(c \times EF_j + d\right) \quad \text{Equation 4.39}$$

~~a,b,c,d = Coefficients from the table below based on the water heater type.~~

~~*Table R4-12 - LDEF Coefficients*~~

~~Coefficient~~	~~Storage Gas~~	~~Storage Electric~~	~~Heat Pump~~
~~A~~	~~-0.098311~~	~~-0.91263~~	~~0.44189~~
~~B~~	~~0.240182~~	~~0.94278~~	~~-0.28361~~
~~C~~	~~1.356491~~	~~4.31687~~	~~-0.71673~~
~~D~~	~~-0.872446~~	~~-3.42732~~	~~1.13480~~

~~EF_j = Energy factor of the water heater (unitless). This is based on the DOE test procedure.~~

~~$WSAF_k$ = Wood stove boiler adjustment factor for the kth water heating system. This is given in Section 4.21.5.5. This is an optional capability and is set to 1.00 for ACMs without wood stove boiler modeling capability.~~

~~*4.21.5.2Instantaneous Gas or Oil*~~

~~The energy use for instantaneous gas or oil water heaters is given by the following equation.~~

$$WHEU_j = \left[\frac{ARL_j \times SEM_j}{EF_j} + \frac{PILOT_j \times 8760}{1000000}\right] WSAF_j \quad \text{Equation 4.40}$$

~~Where~~

~~ARL_j = Adjusted recovery load from Section 4.21.4..~~

~~SEM_j = Source energy multiplier (unitless). This multiplier is 1.0 for gas or oil water heaters and can therefore be ignored.~~

~~EF_j = Energy factor from the DOE test procedure (unitless). This is taken from manufacturers literature or from the CEC Appliance Database.~~

~~$PILOT_j$ = Energy consumption of the pilot light (Btu/h).~~

~~$WSAF_k$ = Wood stove boiler adjustment factor for the kth water heating system. This is given in Section 4.21.5.5. This is an optional capability and is set to 1.00 for ACMs without wood stove boiler modeling capability.~~

~~*4.21.5.3Instantaneous Electric*~~

~~Energy use for instantaneous electric water heaters is given by the following equation.~~

$$WHEU_j = \left[\frac{ARL_j \times SEM_j}{EF_j} \right] WSAF_j$$ Equation 4.41

ARL_j = Adjusted recovery load from Section 4.21.4.

SEM_j = Source energy multiplier (unitless). This multiplier is 3.0 for electric water heaters.

EF_j = Energy factor from DOE test procedure (unitless).

$WSAF_k$ = Wood stove boiler adjustment factor for the kth water heating system. This is given in Section 4.21.5.5. This is an optional capability and is set to 1.00 for ACMs without wood stove boiler modeling capability.

4.21.5.4Large storage gas and Indirect Gas

Energy use for large storage gas and indirect gas water heaters is given by the following equation. Note: large storage gas water heaters are defined as any gas storage water heater with an input rate not less than 75,000 Btu/h.

$$WHEU_j = \left[\frac{ARL_j + (JL_j)}{EFF_j \times EAF_j} + PILOT_j \left(\frac{8760}{1000000} \right) \right] WSAF_j$$ Equation 4.42

[SBL_j has been deleted from this equation]

Where

ARL_j = Adjusted recovery load (defined later).

JLj= Jacket loss (millions Btu/yr). Equations are given in Section 4.21.7.

EFF_j = Efficiency (fraction, not %). To be taken from CEC Appliance Database or from manufacturers literature. These products may be rated as a recovery efficiency, thermal efficiency or AFUE.

EAF_j = Efficiency adjustment factor (unitless). This value is 1.0 for large storage gas water heaters and 0.98 for indirect gas water heaters.

$PILOT_j$ = Pilot light energy (Btu/h).

$WSAF_k$ = Wood stove boiler adjustment factor for the kth water heating system. This is given in Section 4.21.5.5. This is an optional capability and is set to 1.00 for ACMs without wood stove boiler modeling capability.

4.21.5.5Wood Stove Adjustment Factors

This is an optional capability and the Wood Stove Boiler Adjustment Factor is set to 1.00 for ACMs without wood stove boiler modeling capability. The wood stove adjustment factor (unitless) reduces water heating energy to account for the heat contribution of wood stove boilers. This multiplier is taken from the table below, based on climate zone and whether or not the wood stove boiler has a recirculation pump. The inclusion of this factor and its relevant input parameters is an optional capability for ACMs. However, when this optional capability is implemented the algorithms and procedures given below must be used.

Table R4- 13 - Wood Stove Adjustment Factors

Climate Zone	Wood Stoves with Pumps	Wood Stoves without Pumps
1	0.775	0.750

~~2~~	~~0.775~~	~~0.750~~
~~3~~	~~0.775~~	~~0.750~~
~~4~~	~~0.865~~	~~0.850~~
~~5~~	~~0.865~~	~~0.850~~
~~6~~	~~0.910~~	~~0.900~~
~~7~~	~~0.910~~	~~0.900~~
~~8~~	~~0.955~~	~~0.950~~
~~9~~	~~0.910~~	~~0.900~~
~~10~~	~~0.955~~	~~0.950~~
~~11~~	~~0.910~~	~~0.900~~
~~12~~	~~0.865~~	~~0.850~~
~~13~~	~~0.910~~	~~0.900~~
~~14~~	~~0.910~~	~~0.900~~
~~15~~	~~1.000~~	~~1.000~~
~~16~~	~~0.730~~	~~0.700~~

~~4.21.6Tank Surface Area~~

~~Tank surface area (TSA) is used to calculate the jacket loss (JL) for large storage gas and indirect gas water heaters. TSA is given in the following equation as a function of the tank volume.~~

$$TSA_j = e\,(f\,VOL_j^{0.33} + g)^2 \qquad \text{Equation 4.43}$$

~~Where~~

~~VOL_j = Actual tank capacity (gallons).~~

~~e,f,g = Coefficients given in the following table.~~

~~*Table R4-14 - Coefficients for Calculating Tank Surface Areas*~~

~~Coefficient~~	~~Storage Gas~~	~~Large Storage Gas and Indirect Gas~~	~~Storage Electric and Heat Pumps~~
~~e~~	~~0.00793~~	~~0.01130~~	~~0.01010~~
~~f~~	~~15.67~~	~~11.8~~	~~11.8~~
~~g~~	~~1.9~~	~~5.0~~	~~5.0~~

~~4.21.7Jacket Loss~~

~~The jacket loss for large storage gas and indirect gas water heaters~~

$$JL_j = \left(\frac{TSA_j(135-60.3)}{RTI_j + REI_j} + (FTL_j)(EFF_j)(EAF_j) \right) \left(\frac{8760}{1000000} \right)$$ Equation 4.44

Where

TSA_j = Tank surface area (ft^2).

FTL_j = Fitting losses. This is a constant 61.4 Btu/h.

REI_j = R-value of exterior insulating wrap.

$$RTI_j = \left(\frac{TSA_j(135-60.3)}{\left(8.345(VOL_j)(SBL_j)(135-60.3) - FTL_j - PILOT_j\right)(EFF_j)(EAF_j)} \right)$$ Equation 4.45

SBLj = Standby loss expressed as a fraction of the heat content of the stored water lost per hour from the CEC Appliance Database or from manufacturer's literature.

Where EFF_j and EAF_j are efficiencies as described in *Section 4.21.5.4*

5. Minimum Capabilities Tests

This chapter describes the methods used to test the minimum modeling capabilities of candidate ACMs. There are separate tests for space conditioning tests and water heating tests. Most of the space conditioning tests are performed using a simple square building prototype (see Figure R5-7). The water heating tests are performed relative to two prototype water heating systems. Most of the tests are performed in only five climate zones, but some are performed in all sixteen climate zones.

5.1 Overview

Two types of tests are performed: accuracy tests and standard design generator tests (or custom budget tests). While ACMs shall pass all these tests, the CEC, at its discretion, may require additional tests to justify the accuracy of the candidate ACM to confirm other required features.

5.1.1 Accuracy Tests

This section describes the general testing concept that is used for the accuracy tests. For the prototype buildings and the specified variations, candidate ACMs shall generate an estimate of TDV energy and this is compared to the TDV energy that is estimated with the reference method. The TDV energy of the candidate ACM shall be within an acceptable tolerance of the reference method in order for the ACM to pass the test. The margin of acceptability is defined below and may change for each group of tests. For the space conditioning tests, only the TDV energy for space conditioning is considered and for the water heating tests only the TDV energy for water heating is considered.

General Procedure

Basecase. Each test begins with a prototype building or system that exactly complies with the prescriptive criteria (package D); this is the basecase building or system. The basecase has a zero compliance margin, e.g. it exactly complies with the standard. In another parlance, it is the custom budget building.

Discrete Modifications. A set of discrete modifications are then made to the basecase building or system, e.g. the ducts are sealed, walls and ceilings are field verified for good construction quality or a different type of heating or cooling equipment is installed. The discrete modifications are defined for each test and may vary

slightly for each climate zone identified for the test. The discrete modifications are selected to represent important compliance measures. The discrete modifications will either improve or degrade the TDV energy performance of the basecase building, e.g. the compliance margin of the modified basecase will become either positive or negative.

Continuous Variable. A continuous variable, which is identified for each test, is then increased or reduced so that the modified basecase complies by a specified tolerance and fails by a specified tolerance. The continuous variables have a predictable and continuous impact on the TDV energy of the proposed design. Examples are SEER, AFUE, and glass area (above 20% of the floor area). The value for the continuous variable that causes the modified basecase to pass by the specified tolerance is the "passing solution" and the value that causes failure by the specified tolerance is the "failing solution". The "failing solution" shall result in TDV energy as close as possible to the negative tolerance, but shall be greater than the negative tolerance. The "passing solution" shall result in TDV energy as close as possible to the positive tolerance but shall be less than the positive tolerance. The positive and negative tolerances are defined for each test, but in general they are 1.0 kTDV/ft²-y or 3% of the baseline TDV energy whichever is greater.

The procedure is illustrated in Figure R5-1 through Figure R5-4. In these diagrams, the base case building is represented by point "A". The vertical axis represents the compliance margin with a positive compliance margin (building or system passes) above the horizontal axis and a negative compliance margin (building or system fails) below the horizontal axis. Figure R5-1 and Figure R5-3show instances when the discrete modifications produce a positive compliance margin and Figure R5-2 and Figure R5-4 are examples of discrete modifications that produce a negative compliance margin. When the discrete modifications produce a change in TDV energy that is within the specified tolerances, the passing solution or failing solutions are equal to the basecase value of the continuous variable. This situations is illustrated in Figure R5-3 and Figure R5-4.

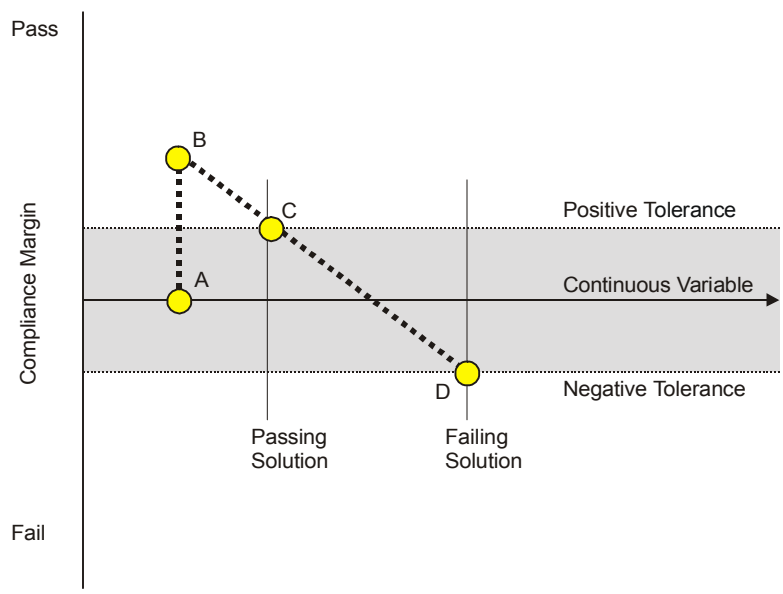

Figure R5-1 – Testing Concept – Discrete Modifications Produce Positive Compliance Margin
The discrete modifications produce a positive compliance margin that exceeds positive tolerance. Both the passing solution and the failing solutions for the continuous variable are determined.

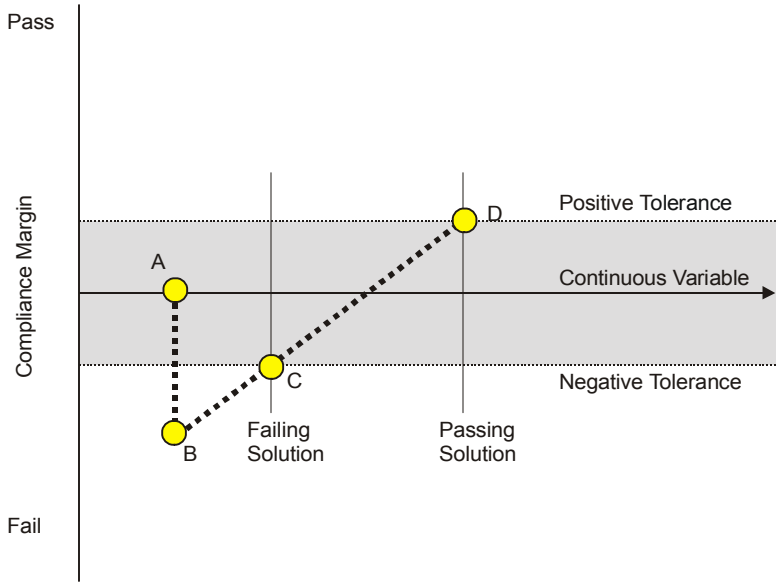

Figure R5-2 – Testing Concept – Discrete Modifications Produce Negative Compliance Margin
The discrete modifications produce a negative compliance margin that exceeds negative tolerance. Both the passing solution and the failing solutions for the continuous variable are determined.

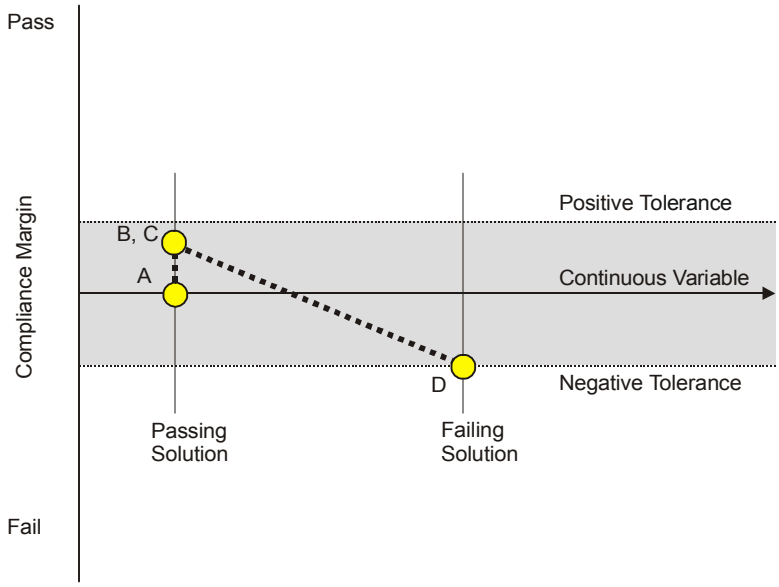

Figure R5-3 – Testing Concept – Discrete Modifications Produce Positive But Small Compliance Margin
The discrete modifications produce a positive compliance margin that is less than the positive tolerance. The passing solution for the continuous variable is equal to the basecase; the failing solution is determined by the vendor..

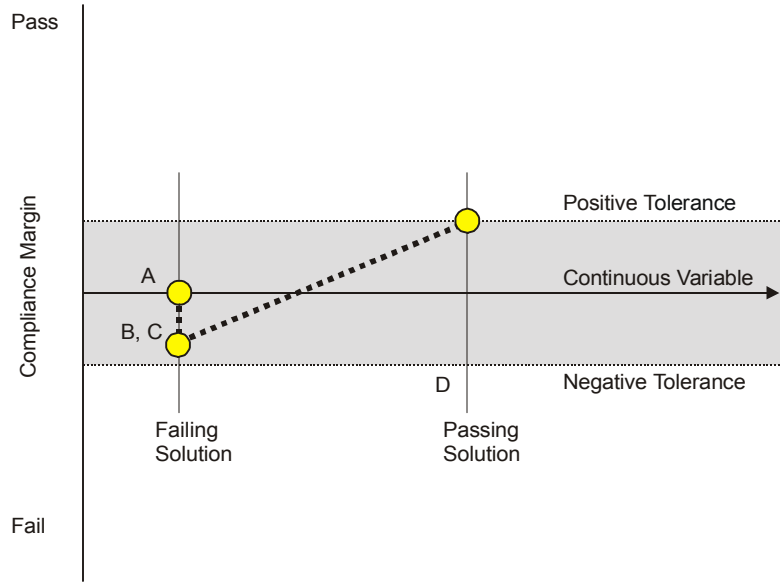

Figure R5-4 – Testing Concept – Discrete Modifications Produce Negative But Small Compliance Margin
The discrete modifications produce a negative compliance margin that is within the negative. The failing solution for the continuous variable is equal to the basecase; the passing solution is determined by the vendor.

Acceptance Criteria

For every test, the CEC reference method shall pass the modified basecase when data for the passing solution is entered and fail the modified basecase when data for the failing solution is entered. The acceptance criteria shall be satisfied for all tests. In addition to producing estimates that are within the tolerances, the tests are also used to verify that the standard reports are correctly produced, as required in Chapter 2. For instance, many of the discrete modifications trigger measures that shall be listed in the "Special Features and Modeling Assumptions" section of the Certificate of Compliance. Finally, the tests will be used to verify that the standard design building is correctly defined, as specified in Chapter 3.

5.1.2 Standard Design Tests

The acceptance criteria for the standard design generator tests uses a different approach from the accuracy tests. Two types of tests are used to verify that the standard design is created according to the rules specified in Chapter 3: These are defined below along with the acceptance criteria for each.

Standard Design Equivalent Tests

The standard design equivalent tests consist of matched pairs of computer runs: a proposed design and its standard design equivalent. The standard design equivalent is the proposed design reconfigured according to the standard design rules in Chapter 3 to be in exact compliance with the prescriptive requirements (package D). The ACM vendor is required to create the proposed design and standard design equivalent input files and submit them with the application for approval.

Two Certificates of Compliance are produced: one for the proposed design and one for the standard design equivalent. The standard design TDV energy budget on the proposed design Certificate of Compliance shall be equal to the TDV energy use shown in both the standard design energy budget and proposed design columns of the standard design equivalent computer run. See Figure R5-5.

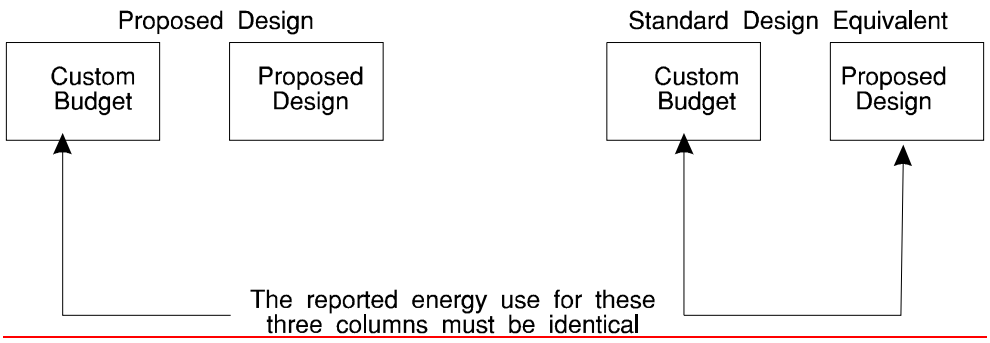

Figure R5-5 – Custom Budget Tests

Neutral Variable Tests.

The second series of standard design equivalent tests are the neutral variable tests. Neutral variables are building features that are unchanged between the standard design and the proposed design. An example of a neutral variable is glass area, below the prescriptive limit of 20%. In this series of tests, a change is specified in one of the neutral variables and the compliance margin has to remain within a certain tolerance.

5.1.3 Labeling Tests and Computer Simulations

Each of the tests has a specific label that includes the test series, the number of the test, the prototype used in the test and the climate zone for which the test is performed. Using a precise designation to make it easier to keep track of the many computer simulations will ease the CEC review process. The following labeling scheme described in Figure R5-6 shall be used:

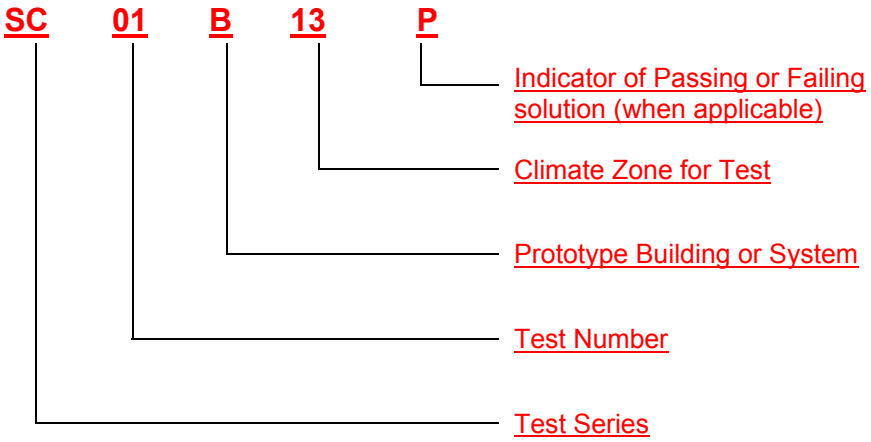

Figure R5-6 – Labeling of Computer Simulations

ACM input and output files shall use the same labeling scheme, but with a “P” or “F” concatenated on the end to indicate if the file represents the passing or failing solution.

5.1.4 Documentation

The ACM vendor shall record the results of the tests on the forms provided in Appendix RA-2005 and provide electronic copies of the input files to the CEC. The filenames shall include the test label (see below) with a “P” or “F” concatenated to the file name to indicate if the file represents the passing solution or the failing solution. The form (Appendix RA-2005) includes an entry for the TDV energy for the passing solution and the failing

solution. The forms also include the continuous variable values for the passing and failing solutions as well as the ACM filenames for the passing and failing cases.

5.2 Space Conditioning Tests

This section describes the space conditioning tests that shall be performed by the ACM vendor. Three groups of tests are described. The first verify that space conditioning TDV energy is predicted with an acceptable tolerance of that predicted by the reference method. The second series of tests verify that the custom budget or standard design is correctly defined. The third series of tests verify that the ACM calculates TDV energy correctly for additions and alterations to low-rise residential buildings.

5.2.1 Accuracy Tests (SC)

The accuracy tests verify that the candidate ACM passes and fails buildings in a manner consistent with the reference method.

Prototype Buildings

The space conditioning accuracy tests are performed with two prototype buildings. The geometry of the prototype buildings and other features are described below and illustrated in Figure R5-7. The attic is not shown in Figure R5-7 since the ACM modeling rules do not require the attic to be explicitly modeled as a separate thermal zone.

Both prototype A and B are a square box measuring 40 ft by 40 ft and 10 ft tall. A single 80 ft² window on each façade (total window area is 20% of the floor area). The facades face exactly north, east, south and west. The thermal performance of all building envelope elements is in exact compliance with the prescriptive requirements (package D in the standards). The prototypes have a gas furnace and a split system air conditioner with air distribution ducts located in an attic.

A Prototype A has a slab-on-grade.

B Prototype B has raised floor construction.

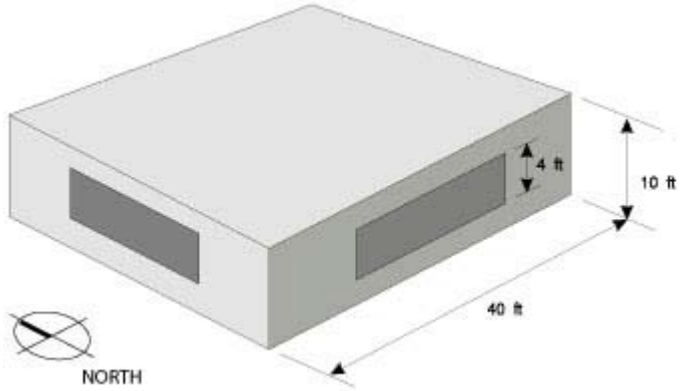

Figure R5-7 – Prototype Buildings A and B

Test Descriptions

Table R5-18 describes each of the space conditioning tests that shall be performed. The space conditioning accuracy tests use the series designation "SC".

Table R5-18 – Summary of the Space Conditioning Tests

Series	Number	Prototypes	Climates	Discrete Modification(s)	Continuous Variable
SC	0	A, B	All	None	None
SC	1	A	3, 9, 12, 14, 16	**SEER**. Increase the cooling equipment efficiency (SEER) from the basecase condition of 12.0 to 14.0.. Use the default EER for both the SEER 12.0 and SEER 14.0 cases. Make no changes to the air distribution system or other HVAC system components. Produces a positive compliance margin.	**AFUE**. Reduce the heating equipment AFUE to find the Passing Solution and the Failing Solution.
SC	2	A	3, 9, 12, 14, 16	**Ceiling U-factor**. Reduce the ceiling U-factor from the basecase condition to R-60. The U-factor for this condition shall be taken from ACM Joint Appendix IV. Do not assume field verification for construction quality. Produces a positive compliance margin.	**South Glass Area**. Increase south glass area to find the Passing Solution and the Failing Solution.
SC	3	A	3, 9, 12, 14, 16	**Wall U-factor**. Increase wall insulation to the equivalent of R-22 in a 2x6 wood framed cavity with R-14 continuous insulation. The U-factor for this condition shall be taken from ACM Joint Appendix IV. Do not assume field verification for construction quality. Produces a positive compliance margin.	**West Glass Area**. Increase west glass area to find the Passing Solution and the Failing Solution.
SC	4	A	12, 14, 16	**Slab F-factor**. Add R-7 slab insulation for climate zones 12 and 14. In climate zone 16, increase slab edge insulation from the basecase R-7 to R-21. Produces a positive compliance margin.	**North Glass Area**. Increase north glass area to find the Passing Solution and the Failing Solution.
SC	5	A	3, 9, 12, 14, 16	**Fenestration Type**. Replace the basecase fenestration with a super high performance product with a U-factor of 0.25 and a SHGC of 0.40. Produces a positive compliance margin.	**North Glass Area**. Increase north glass area to find the Passing Solution and the Failing Solution.
SC	6	A	3, 9, 12, 14, 16	**Fenestration Type**. Replace the basecase fenestration with a product that fails to comply with the package D requirements. The replacement product shall have a U-factor of 0.90 and an SHGC of 0.70. Produces a negative compliance margin.	**AFUE**. Increase or reduce the heating equipment AFUE to find the Passing Solution and the Failing Solution.
SC	7	A	12, 14, 16	**Exposed Thermal Mass**. Increase the percent of the slab-on-grade that is exposed from the basecase condition of 20% to 40%. Produces a positive compliance margin.	**South Glass Area**. Increase south glass area to find the Passing Solution and the Failing Solution.
SC	8	A	3, 9, 12, 14, 16	**Exposed Thermal Mass**. Increase the percent of the slab-on-grade that is exposed from the basecase condition of 20% to 40%. Produces a positive compliance margin.	**West Glass Area**. Increase west glass area to find the Passing Solution and the Failing Solution.
SC	9	A	3, 9, 12, 14, 16	**Exposed Thermal Mass**. Increase the percent of the slab-on-grade that is exposed from the basecase condition of 20% to 40%. Produces a positive compliance margin.	**North Glass Area**. Increase north glass area to find the Passing Solution and the Failing Solution.
SC	10	A	3, 9, 12, 14, 16	**Exposed Thermal Mass**. Increase the percent of the slab-on-grade that is exposed from the basecase condition of 20% to 40%. Produces a positive compliance margin.	**East Glass Area**. Increase east glass area to find the Passing Solution and the Failing Solution.
SC	11	A	3, 9, 12, 14, 16	**South Overhangs**. Add a two foot projection from the surface of the south glass. Its bottom edge is located six inches above the top of the window. The window is assumed to be 6 ft 6 in. high and the overhang is assumed to extend an infinite distance beyond the sides of the windows. (see Figure R5-). Produces a positive compliance margin.	**South Glass Area**. Increase south glass area to find the Passing Solution and the Failing Solution.
SC	12	A	3, 9, 12, 14, 16	**Building Envelope Sealing**. Reduce the building (SLA) from 4.9 to 2.9 through diagnostic testing and sealing. Produces a positive compliance margin.	**Glass Area**. Increase glass area uniformly on all orientations to find the Passing Solution and the Failing Solution.

Series	Number	Prototypes	Climates	Discrete Modification(s)	Continuous Variable
SC	13	A	3, 9, 12, 14, 16	**Building Envelope Sealing and Mechanical Ventilation**. The building leakage (SLA) is reduced from 4.9 to 2.9 through diagnostic testing and sealing. In addition, mechanical ventilation is added that provides 80 cfm (0.375 air changes per hour) of continuous ventilation and consumes 20 watts of power continuously. Produces a positive compliance margin.	**Glass Area**. Increase glass area uniformly on all orientations to find the Passing Solution and the Failing Solution.
SC	14	A	3, 9, 12, 14, 16	**Construction Quality**. Assume that the proposed design has been field verified to have quality wall and ceiling insulation quality. Produces a positive compliance margin.	**AFUE**. Reduce the heating equipment AFUE to find the Passing Solution and the Failing Solution.
SC	15	A	9, 12, 14	**Cool Roofs / Radiant Barrier**. Remove the radiant barrier (or equivalent cool roof) from the proposed design. Produces a negative compliance margin.	**SEER**. Increase the SEER (using default EER) to find the Passing Solution and the Failing Solution.
SC	16	A	9, 12, 14	**Natural Ventilation**. Change the window types to increase the free ventilation area from the default of 10% of the total window area to 20% of the window area, and assume a 10 ft elevation difference between the air inlet and the outlet. Produces a positive compliance margin.	**SEER**. Reduce the SEER (using default EER) to find the Passing Solution and the Failing Solution.
SC	17	A	3, 9, 12, 14, 16	**Duct Leakage**. Do not seal the ducts as required by the prescriptive standards. Produces a negative compliance margin.	**SEER**. Increase the SEER (using default EER) to find the Passing Solution and the Failing Solution.
SC	18	A	3, 9, 12, 14, 16	**Duct Surface Area.** Through diagnostic verification, reduce duct surface area from the default of 27% of the floor area to 10% of the floor area. Produces a positive compliance margin.	**SEER**. Reduce the SEER (using default EER) to find the Passing Solution and the Failing Solution.
SC	19	B	9, 12, 14	**Duct Location.** Move the HVAC ducts from the crawlspace (the default for one story, raised floor buildings) to the attic. Produces a negative compliance margin.	**SEER**. Reduce the SEER (using default EER) to find the Passing Solution and the Failing Solution.
SC	20	A	9, 12, 14	**Duct Insulation.** Reduce the duct R-value from the R-8 prescriptive requirement to R-4.2. Produces a negative compliance margin.	**SEER**. Increase the SEER (using default EER) to find the Passing Solution and the Failing Solution.
SC	21	A	9, 12, 14	**Energy Efficiency Ratio (EER)**. Instead of using the default EER of 10.415 for the default SEER 12 assume an EER of 11.5 with the same SEER of 12). Produces a positive compliance margin.	**SHGC**. Increase the SHGC of the windows on all orientations to find the Passing Solution and the Failing Solution.
SC	22	A	9, 12, 14	**TXV / Charge Testing**. Do not install a TXV and do not field verify that the split system has the correct refrigerant charge. Produces a negative compliance margin.	**SHGC**. Reduce the SHGC of the windows on all orientations to find the Passing Solution and the Failing Solution.
SC	23	A	9, 12, 14	**Airflow Across Evaporator Coil**. Verify through field verification that there is adequate airflow for compliance credit (400 cfm/ton for a wet coil) across the evaporator coil. Produces a positive compliance margin.	**SHGC**. Increase the SHGC of the windows on all orientations to find the Passing Solution and the Failing Solution.
SC	24	A	9, 12, 14	**Air Conditioner Fan Power**. Reduce fan power through field verification. The default is 0.51 W/cfm. Reduce this to 0.20 W/cfm. Produces a positive compliance margin.	**SHGC**. Increase the SHGC of the windows on all orientations to find the Passing Solution and the Failing Solution.
SC	25	A	3, 9, 12, 14, 16	**Electric Heat**. Replace the gas furnace and air distribution system in the basecase with electric resistance baseboards (no air distribution or duct losses). In addition, increase the ceiling insulation to R-60. The U-factor for this condition shall be taken from ACM Joint Appendix IV. Do not assume field verification for construction quality. Produces a negative compliance margin.	**Fenestration U-factor**. Reduce the fenestration U-factor on all orientations to find the Passing Solution and the Failing Solution.

Series	Number	Prototypes	Climates	Discrete Modification(s)	Continuous Variable
SC	26	A	9, 12, 14	**Side Fins**. For this test side fins are added to the east and west facades of prototype A. The side fins extend 40 feet from the surface of a window that is assumed to be 10 feet wide. The fins are 5 feet from the edge of the window. The top of the side fins are 20 feet above the top of the window. See Figure R5-9. Sidefins are expected to produce a positive compliance margin.	**SEER**. Vary the SEER (keep EER at the default) to find the passing solution and fail the failing solution.

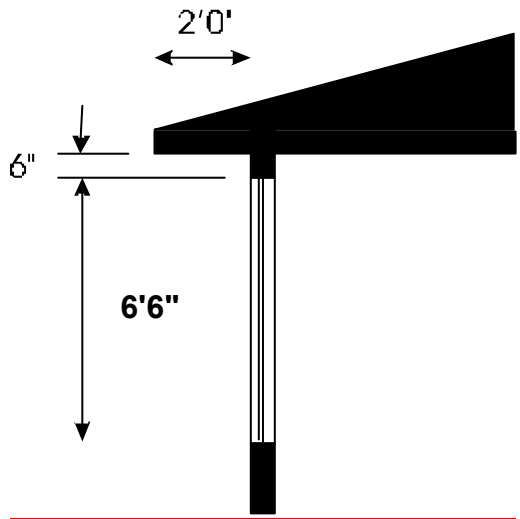

Figure R5-8 – Overhang Characteristics

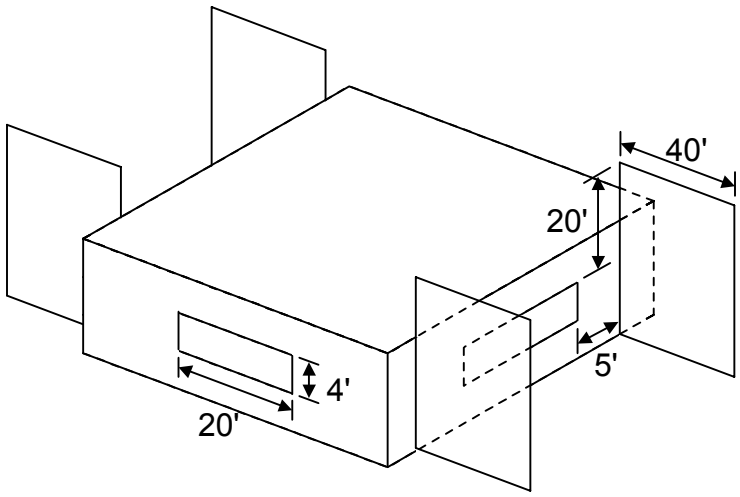

Figure R5-9 – Side Fins for Optional Capabilities Test
The north and south façades are the ones that do not have the sidefins.

Acceptance Criteria

The positive tolerance is the basecase TDV energy for space conditioning plus 3% or 1 kTDV/ft²-y, whichever is greater. The negative tolerance is the basecase TDV energy for space conditioning less 3% or 1 kTDV/ft²-y,

whichever is greater. The CEC reference method shall pass the modified basecase when data for the passing solution is entered and fail the modified basecase when data for the failing solution is entered.

In addition to producing estimates that are within the tolerances, the tests are also used to verify that the standard reports are correctly produced, as required in Chapter 2. For instance, many of the discrete modifications trigger measures that shall be listed in the "Special Features and Modeling Assumptions" section of the Certificate of Compliance.

5.2.2 Standard Design Generator Tests (*SD*)

This section describes the standard design tests that shall be performed by the ACM vendor. The standard design tests use the series designation "SD". ACMs shall automatically create the standard design building, as defined in Chapter 3. The standard design run is made automatically at the same time as the proposed design run, and the results are reported together on the Certificate of Compliance discussed in Chapter 2. The tests described in this section verify that the standard design is correctly defined for the proposed design and that the custom budget is correctly calculated. These tests supplement the SC tests, which also verify certain standard design features. .

Prototypes Buildings

The custom budget tests use three prototype buildings as described below.

C Prototype C is a 1,761 ft² , one and two-story, single-family detached home which is widely used to analyze the impact of the standards and the cost effectiveness of measures. Two versions of this prototype are used in the tests. One has a slab floor and one has a raised floor. Details are available from the CEC.

D Prototype D is identical to prototype C, except that it is has a raised floor. Details are available from the CEC.

E Prototype E is an eight-unit, two-story multi-family building. Details are available from the CEC.

Standard Design Equivalent Tests

The standard design equivalent tests are described in Table R5-19. For each of these tests, the standard design equivalent budget and proposed design TDV energy shall equal each other. In addition, the TDV energy shall equal the budget TDV energy for the proposed building.

Table R5-19 – Standard Design Tests

Series	*Number*	*Prototypes*	*Climates*	*Description*
SD	0	A, B	All	**Basecase Prototypes**. These tests were also performed in the SC series. For each of these tests, the standard design and proposed design TDV energy shall be equal. There is no proposed design case for these tests.
SD	1	C	All	**Slab-On-Grade**. The purpose of this test is to verify that the standard design generator correctly defines the standard design for proposed designs using slab-on-grade designs. The "SC01C**" files are run in all 16 climate zones.
SD	2	D	All	**Raised Floor**. The purpose of this test is to verify that the standard design generator correctly defines the standard design for proposed designs using raised floor buildings. The "SC01D**" files are run in all 16 climate zones.
SD	3	E	All	**Multi-Family.** The purpose of this test is to verify that the standard design generator correctly defines the standard design for multi-family buildings. The "SC01E**" files are run in all 16 climate zones.

Neutral Variable Tests

The neutral variable tests are described in Table R5-20. For each of these tests, the compliance margin shall remain within one percent of zero.

Table R5-20 – Neutral Variable Design Tests – Space Conditioning

Series	Number	Prototypes	Climates	Description
SD	4	A	3, 9, 12, 14, 16	**Window Area**. Reduce window area from 20% of the floor area to 15% of the floor area. Reduce the size of the window on each façade to 60 ft². Do not change any other features.
SD	5	A	3, 9, 12, 14, 16	**Wall Area.** Increase the gross wall area on each façade from 400 ft² to 600 ft².

5.2.3 Additions and Alternations (AA)

This section describes the tests for alternations and additions that shall be performed by the ACM vendor. The additions and alternations tests use the series designation "AA".

Additions are treated as new buildings except that internal heat gains are allocated on a fractional dwelling unit basis. With the Addition + Existing + Alternation approach, energy credit may be taken for improvements to the existing building. This series of tests exercises the various default assumptions based on the vintage of the existing building and the various reporting requirements for modeling an addition with an existing building. In addition, these tests verify the proper determination of the energy budget and compliance criteria for an addition with an improved existing building.

Prototype Buildings

The prototype used in these tests consists of an existing building and an addition. The existing building has the same physical configuration as Prototype A but the thermal performance of building envelope components are downgraded to be more typical of older existing building. Prototype E has the thermal characteristics of 1975 construction practice and Prototype F has the thermal characteristics of 1989 construction practice. See the Additions and Alternations section of Chapter 3 for details on construction assemblies. Each window is 4 ft high and 20 ft wide centered on the facade. The addition is 12 ft deep by 40 ft long and 10 ft high and covers the whole west side of the existing building.

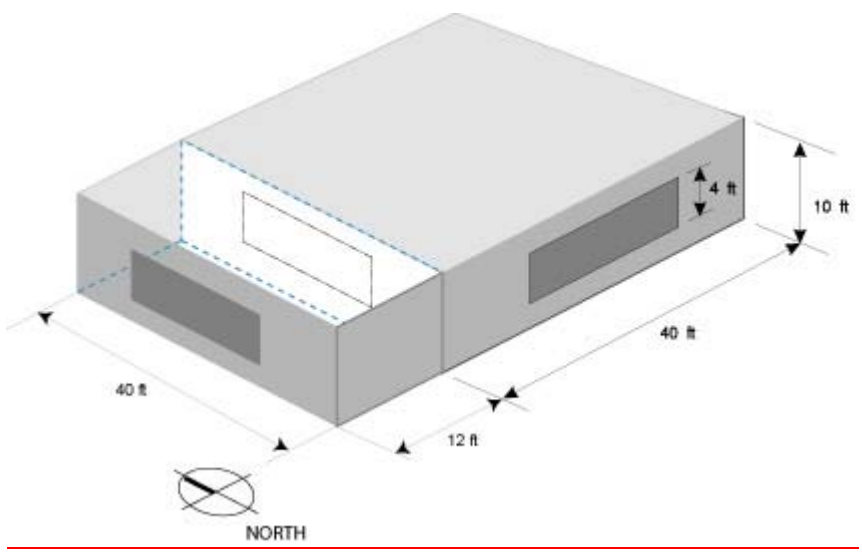

Figure R5-10 – Prototypes E and F

Test Descriptions

These tests are also be used to confirm that reporting requirements are met when modeling an addition with an existing building and that the appropriate budgets have been correctly determined. Two of the three compliance approaches for additions and alternations are evaluated with these tests: the addition-alone

approach and the Existing + Addition + Alteration approach. The whole building approach is not evaluated since this is identical to new construction. Table R5-21 describes the tests to perform with the Addition-Alone approach. Table R5-22 describes the tests to perform with the Existing + Addition + Alteration approach.

Table R5-21 – Summary of the Addition-Alone Tests

Series	Number	Prototypes	Climates	Discrete Modification(s)	Continuous Variable
AA	1	E 1977	3, 9, 12, 14, 16	**Baseline**. The features of the addition shall all exactly meet the prescriptive requirements. The addition is served by an HVAC system in the existing house.	**None**. This is a standard design generator test.
AA	2	E 1977	3, 9, 12, 14, 16	**Increase Glass**. Increase fenestration area on the west side of the addition to 144 ft². This discrete change will fail compliance because the glass area exceeds 20% of the floor area.	**Fenestration Area U-factor**. Reduce the fenestration U-factor in the addition to find the Passing Solution and the Failing Solution.
AA	3	E 1989	3, 9, 12, 14, 16	**New HVAC**. Install a separate HVAC split system gas/electric system for the addition that has an SEER of 14 and an EER of 13. This will create a positive compliance margin.	**Fenestration U-factor**. Increase the fenestration U-factor in the addition to find the Passing Solution and the Failing Solution.

Table R5-22 – Summary Existing + Addition + Alternation Tests

Series	Number	Prototypes	Climates	Discrete Modification(s)	Continuous Variable
EA	1	E 1977	3, 9, 12, 14, 16	**Baseline**. The features of the addition shall all exactly meet the prescriptive requirements. The addition is served by an HVAC system in the existing house. Remove 80 ft² from the existing west wall and include 80 ft² with the addition (no net increase in glass area)	**None**. This is a standard design generator test.
EA	2	E 1977	3, 9, 12, 14, 16	**Increase Glass**. Increase fenestration area on the west side of the addition to 144 ft². This discrete change will fail compliance because the glass area exceeds 20% of the floor area.	**Fenestration U-factor**. Reduce the fenestration U-factor in the addition to find the Passing Solution and the Failing Solution.
EA	3	E 1989	3, 9, 12, 14, 16	**New HVAC**. Install a separate HVAC split system gas/electric system for the addition that has an SEER of 14 and an EER of 13. This will create a positive compliance margin.	**Fenestration U-factor**. Increase the fenestration U-factor in the addition to find the Passing Solution and the Failing Solution.

Acceptance Criteria

For each test, the CEC reference method shall pass the addition plus existing building when data for the passing solution is entered and fail the addition plus existing building when data for the failing solution is entered. The positive tolerance is the TDV space conditioning energy for the basecase plus 3% or 1 kBtu/ft²-y, whichever is greater, and the negative tolerance is also 3% or 1 kBtu/ft²-y, whichever is greater. In addition to producing estimates that are within the tolerances, the CEC will also verify that the correct performance factors are used, based on the vintage of the existing building, and that the standard reports are correctly produced, as required in Chapter 2.

5.3 Water Heating Tests (WH)

This section describes the water heating tests that shall be performed by the ACM vendor. The water heating tests use the series designation "WH". The water heating tests are defined in a similar manner as the space conditioning tests, except that the tests are performed relative to a water heating system, not whole building TDV energy. See the Overview section of this chapter for a description of the procedures. For the water heating tests, only the TDV energy for water heating is considered in the comparison.

5.3.1 Prototype Systems

Two prototype water heating systems are used. The first is a system which serves the single family home represented by space conditioning prototype C (the water heating system also uses the "C" designation). The second is a system that serves the multi-family apartment building represented by prototype E (this uses the "E" designation). More information on the buildings served is provided above in the prototype descriptions for the space conditioning tests. The water heating systems for the two prototypes are described in Table R5-23.

Table R5-23 – Base Case Water Heating Systems

Prototype	Prototype C	Prototype E
Building Information		
Dwelling Units	1	16
Total Building Area	1,761 ft²	11,616 ft²
Average Dwelling Unit Size	1,761 ft²	726 ft²
Water Heating Equipment		
Number of Water Heaters	1	4
Water Heater Type	Storage Gas (SG)	Storage Gas (SG)
Energy Factor	0.575	0.480
Tank Size	50	4 @ 100
Distribution System	Standard (PIK)	Recirculation with timer controls
Multi-Family Recirculation System		
Linear Feet of Pipe (Note 1)	n.a.	200
PF Outdoor Air	n.a.	0.10
PF Ground	n.a.	0.20
PF Plenum	n.a.	0.70
Pipe Diameter for Recirculation System	n.a.	1.5 in.
Recirculation Pipe Insulation	n.a.	1.0 in.
Pump Size (brake horsepower)	n.a.	½ hp
Pump Motor Efficiency	n.a.	0.85
Note 1. Total Linear feet used for recirculation between dwelling units (input to Eqn. RG-16). PF is the fraction of the total linear feet that is used either outside, in the ground or in the plenum, as defined in Section RN3.4.		

5.3.2 Accuracy Tests (WH)

As described in the Overview of this chapter, the ACM vendor shall find the passing and failing solution for each test described in Table R5-24. The CEC reference method shall then pass the modified basecase when data for the passing solution is entered and fail the modified basecase when data for the failing solution is entered. The acceptance criteria shall be satisfied for all tests. The water heating tests use a 2% passing tolerance and a 2% failing tolerance, or 1.0 kTDV/ft²-y, whichever is greater.

Table R5-24 – Accuracy Tests – Water Heating

Type	*Test*	*Prototypes*	*Climates*	*Discrete Modification(s)*	*Continuous Variable*
WH	0	C, E	All	None	None
WH	1	C, E	3, 9, 12, 14, 16	**Electric Storage Water Heater.** Change the water heater type from Gas Storage to Electric Storage. Use an Energy Factor of 0.91 for prototype C and 0.87 for E. This produces a negative compliance margin.	**Solar Savings Fraction (SSF).** Increase the SSF to find the passing and failing solutions.
WH	2	C, E	3, 9, 12, 14, 16	**Electric Instantaneous Water Heater.** Change the water heater type from gas storage to electric Instantaneous and use a point of use (POU) distribution system. This produces a negative compliance margin.	**Solar Savings Fraction (SSF).** Increase the SSF to find the passing and failing solutions.
WH	32	C	3, 9, 12, 14, 16	**Distribution Type.** Change the distribution system from the default to pipe insulation on all lines (PIA) system. This produces a positive compliance margin.	**Energy Factor.** Reduce the EF for the proposed building until the passing and failing solutions are reached.
WH	4	E	3, 9, 12, 14, 16	**Recirculation Control.** Add temperature and timer controls (RTmTp) for the recirculating system. This produces a positive compliance margin.	**Energy Factor (EF).** Reduce the EF to find the passing and failing solutions.
WH	5	E	3, 9, 12, 14, 16	**Large Storage Water Heater.** Change water heater type to a 400 gallon large gas storage, SBL = 0.1, thermal (recovery) efficiency= 0.75.	**Thermal Efficiency.** Decrease or increase thermal efficiency (recovery efficiency or AFUE) until the passing and failing solutions are reached.
WH	6	E	3, 9, 12, 14, 16	**Recirculation Piping Insulation.** Increase recirculation piping insulation from 1 in. to 1.5 in. This produces a positive compliance margin.	**Energy Factor.** Reduce the energy factor to find passing and failing solutions.
WH	7	C	3, 9, 12, 14, 16	**Number of Water Heaters.** Use 2 water heaters for the single residence; both are the same size and performance as the basecase. This will produce a negative compliance margin	**Energy Factor.** Increase the energy factor of both water heaters together to find passing and failing solutions.
WH	8	E	3, 9, 12, 14, 16	**Pump Controls.** Baseline assumes timer pump controls. Change to no pump control. This produces a negative compliance margin.	**Energy Factor.** Increase the energy factor of both water heaters together to find passing and failing solutions.

5.3.3 Standard Design Tests (WD)

This section describes a series of tests that verify that the standard design is being correctly defined for water heating systems. The acceptance criteria for these tests is different from the accuracy tests. For this series of tests, a change is defined, which according to the rules for defining the standard design should be neutral. Being neutral means that the change is reflected for both the standard design and the proposed design. The compliance margin shall be within plus or minus 2% of the standard design TDV energy for water heating (space conditioning is not considered). In addition, TDV energy for water heating shall move in the direction indicated in each test description.

Standard Design Equivalent Tests

For water heating the standard design equivalent tests consist of running the basecase water heating systems in all 16 climates. For each case, the standard design TDV energy shall equal the proposed design TDV energy. See Table R5-25.

Table R5-25 – Standard Design Equivalent Tests – Water Heating

Type	*Test*	*Prototypes*	*Climates*	*Discrete Modification(s)*	*Continuous Variable*
WD	0	C, E	All	None	None

Neutral Variable Tests

The neutral variable tests are shown in Table R5-26. For these tests, the compliance margin shall remain at zero, unchanged.

Table R5-26 – Neutral Variable Tests – Water Heating

Type	*Test*	*Prototypes*	*Climates*	*Discrete Modification(s)*
WD	1	C	3, 9, 12, 14, 16	**House Size**. Increase house size to 2,500 ft². TDV energy for both the *Standard Design* and the *Proposed Design* shall increase.
WD	2	C	3, 9, 12, 14, 16	**House Size**. Increase house size to 3,500 ft². The TDV energy for both the *Standard Design* and the *Proposed Design* shall equal the TDV energy for test 1.
WD	3	D	3, 9, 12, 14, 16	**Pipe Length**. Increase recirculation piping length to 400 ft. TDV energy for both the *Standard Design* and the *Proposed Design* shall increase.
WD	4	D	3, 9, 12, 14, 16	**Pipe Location**. Move all the piping outdoors. PF ground and plenum become zero and PF outdoors becomes 1.00. TDV energy for both the *Standard Design* and the *Proposed Design* shall increase.
WD	5	D	3, 9, 12, 14, 16	**Individual Water Heaters.** Replace the central water heating system with individual water heaters in each dwelling unit, which meet the basecase specification for single-family homes (see Table R5-23)

~~5. Minimum Capabilities Tests ..... 5-1~~
~~5.1 Prototype Buildings ..... 5-1~~
~~5.2 Labeling Computer Runs ..... 5-4~~
~~5.2.1 Basecase Runs ..... 5-4~~
~~5.2.2 Test One ..... 5-5~~
~~5.2.3 Test Two ..... 5-6~~
~~5.2.4 Test Three ..... 5-7~~
~~5.2.5 Test Four ..... 5-7~~
~~5.2.6 Test Five ..... 5-8~~
~~5.2.7 Test Six ..... 5-8~~
~~5.2.8 Test Seven ..... 5-9~~
~~5.2.9 Test Eight ..... 5-9~~
~~5.2.10 Test Nine ..... 5-9~~
~~5.2.11 Test Ten ..... 5-10~~
~~5.2.12 Test Eleven ..... 5-11~~
~~5.2.13 Test Twelve ..... 5-11~~
~~5.2.14 Test Thirteen ..... 5-11~~
~~5.2.15 Test Fourteen ..... 5-12~~
~~5.2.16 Test Fifteen ..... 5-13~~
~~5.3 Water Heating Tests ..... 5-14~~
~~5.3.1 Prototype Water Heaters ..... 5-14~~
~~5.3.2 Labeling Computer Runs ..... 5-15~~
~~5.3.3 Test Results ..... 5-15~~
~~5.4 Standard Design Generator Tests ..... 5-15~~
~~5.4.1 Slab Floor Test ..... 5-16~~
~~5.4.2 Raised Floor Test ..... 5-17~~
~~5.4.3 Electric Heat Test ..... 5-18~~
~~5.4.4 HVAC Distribution Efficiency Tests ..... 5-19~~
~~5.4.5 Addition Plus Existing Building Test ..... 5-21~~
~~5.4.6 Cooling System SSEER Tests ..... 5-22~~

~~5.Minimum Capabilities Tests~~

~~This section describes the methods used to test the minimum modeling capabilities of candidate ACMs. There are three sets of tests: space conditioning tests, water heating tests and standard design generator tests. The space conditioning tests are performed using a simple square building prototype. The water heating tests are performed relative to several prototype water heating systems. The standard design generator tests use a single prototype building designed to have a wide variety of features. Most of the tests are performed in only five climate zones, but some require consideration in all sixteen climate zones.~~

~~Note: Except for tests 39 through 42, the minimum capabilities tests and optional capability tests do not include the SSEER adjustment added as part of the 2000 update as described in Chapter 3. This enables the runs used for the 1998 standards to be reused in this document. This requires that ACMs be programmed with some type of switch to allow the SEER ($SEER_{temperature}$) to be set to the input SEER, and the installation ($F_{install}$) and TXV (F_{txv}) factors to be set to 1.0 for these tests. This feature may not be used for compliance runs and should not be accessible by compliance users.~~

~~5.1Prototype Buildings~~

~~The prototype buildings are illustrated below and described in the following paragraphs. Each is presented in much greater detail on diskettes available from the California Energy Commission. Letter designations are used for the prototype buildings. The letter is used as part of the label for each computer run.~~

~~A This prototype is a square box used for most of the space conditioning tests.~~

~~B The second prototype building is identical to the first except that it has raised floor construction, instead of a slab-on-grade.~~

~~C This prototype is a 3,534 ft², one and two-story, single-family detached custom home.~~

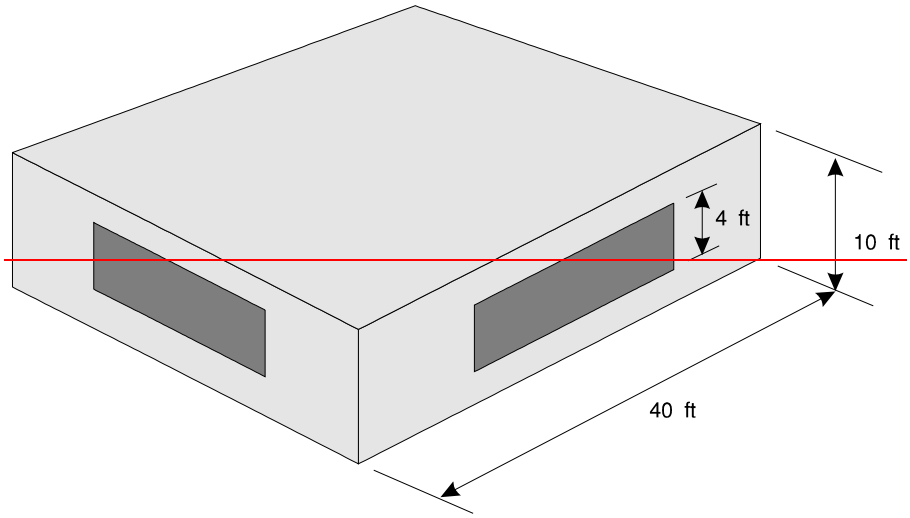

~~Figure 5-1 - Prototype Buildings A and B~~

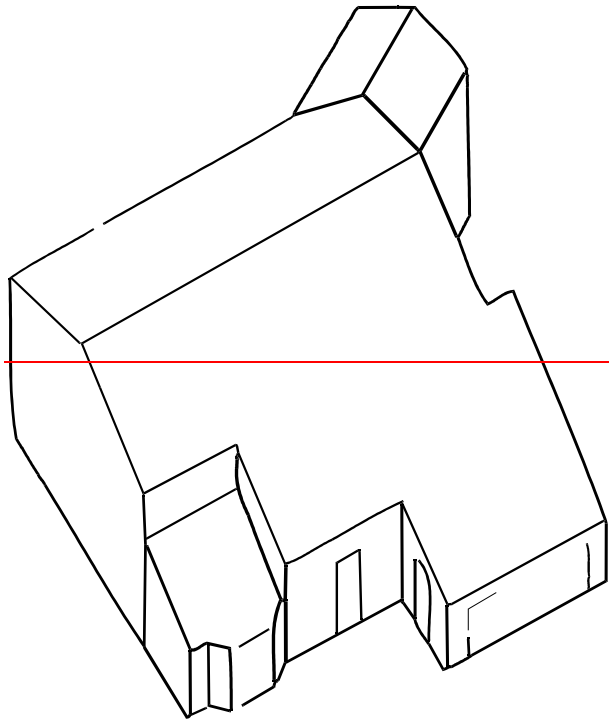

~~Figure 5-2 - Prototype C~~

~~Prototype buildings A and B have the same conservation features in all climate zones (see Table 5-1 below). The specific values associated with each of the basecase conservation measures is also summarized in the CALRES input files available from the Commission (see footnote 1 for this Chapter).~~

~~**Table 5-1 - Basecase Conditions for Prototypes A and B**~~

~~**Component**~~	~~**Basecase Level**~~	~~**Notes**~~
~~Roof U-value~~	~~0.034~~	
~~Wall U-value~~	~~0.088~~	
~~Floor U-value~~	~~0.037~~	
~~Slab F2 factor~~	~~0.76~~	~~4~~
~~Door U-value~~	~~0.330~~	
~~Thermal Mass~~	~~Slab 20% exposed, 80% covered~~	~~3~~
~~SHGC (exterior device) - (bugscreen)~~	~~0.76~~	
~~SHGC (interior)~~	~~0.68~~	
~~SHGC (fenestration - includes framing)~~	~~0.70~~	
~~Window type~~	~~Sliders~~	~~5~~
~~Fenestration U-Value~~	~~0.75~~	
~~Gas furnace AFUE~~	~~0.78~~	~~1~~
~~Air conditioner SEER~~	~~10.0~~	
~~HVAC ducts~~	~~R-4.2 Ducts in Attic~~	~~2~~
~~SLA~~	~~4.9~~	~~6~~

~~Notes:~~

~~1 The AFUE(eff) is 0.7629 when the heat contribution and energy use of the fan is considered.~~

~~2 Duct efficiencies are as described for the standard design in Chapter 3 using the default values for an air conditioner with 36,000 Btu/hr cooling capacity.~~

~~3 Prototype B has thermal mass equivalent to 5% of the raised floor area in 2 inch thick exposed concrete per Section 3.6..~~

~~4 Assumes 80% of the slab at building perimeter is carpeted or covered.~~

~~5 The default natural ventilation assumptions are used. 10% of the window area is operable (half of this is inlet and half is outlet). Height difference between inlet and outlet is 2 feet.~~

~~6 Based on having ducts in unconditioned attic space.~~

~~The computer runs used to generate the ACM tests are based on the standard modeling assumptions described in Chapter 4. Copies of these computer runs are available to assist candidate ACMs in setting their programs up for CEC approval. These input files may be obtained by writing the Residential Buildings Office, California Energy Commission, 1516 Ninth Street (MS-25), Sacramento, California 95814.~~

~~5.2Labeling Computer Runs~~

~~Each computer run used to test the minimum space conditioning capabilities is given a precise designation to make it easier to keep track of the runs and to facilitate analysis. The following scheme is used:~~

~~12 A 04~~

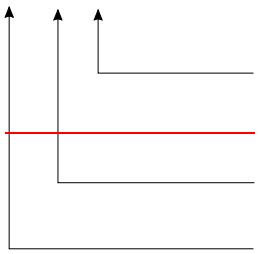

~~Variation on the basecase building used to test minimum space conditioning capabilities (usually the same as the test number)~~

~~Prototype A~~

~~Climate zone 12~~

~~5.2.1Basecase Runs~~

~~The first series of runs establish the basecase against which the other runs are compared. The variation number for the basecase run is "00". The basecase energy use is calculated for prototype A in all sixteen climate zones. The energy usage for the other prototypes is calculated only for climate zones 3, 9, 12, 14 and 16. It is important to note that only two input files are required for these computer runs since measures do not change from climate zone to climate zone. The label for these tests are shown in the table below. Total of 21 Runs.~~

~~Table 5-2 Basecase Run Labels~~

	~~Building Prototype~~	
~~Climate Zone~~	~~A~~	~~B~~
~~1~~	~~01A00~~	~~–~~
~~2~~	~~02A00~~	~~–~~
~~3~~	~~03A00~~	~~03B00~~
~~4~~	~~04A00~~	~~–~~
~~5~~	~~05A00~~	~~–~~
~~6~~	~~06A00~~	~~–~~
~~7~~	~~07A00~~	~~–~~
~~8~~	~~08A00~~	~~–~~
~~9~~	~~09A00~~	~~09B00~~
~~10~~	~~10A00~~	~~–~~
~~11~~	~~11A00~~	~~–~~
~~12~~	~~12A00~~	~~12B00~~
~~13~~	~~13A00~~	~~–~~
~~14~~	~~14A00~~	~~14B00~~
~~15~~	~~15A00~~	~~–~~
~~16~~	~~16A00~~	~~00B16~~

~~5.2.2Test One~~

~~The purpose of the first test is to check the prediction of the ACM for relative heating and cooling loads. The heating efficiency is increased and the cooling equipment efficiency is decreased. When the changes in heating and cooling efficiency are made, additional energy use must result. *Total of 19 Runs.*~~

~~**Table 5-3- Test One Inputs**~~

~~Run Label~~	~~New Heating Efficiency~~	~~New Cooling Efficiency~~
~~02A01~~	~~0.85~~	~~8.0~~
~~03A01~~	~~0.85~~	~~5.5~~
~~04A01~~	~~0.85~~	~~7.0~~
~~05A01~~	~~0.85~~	~~5.5~~
~~06A01~~	~~0.95~~	~~6.5~~
~~07A01~~	~~0.95~~	~~7.0~~
~~08A01~~	~~0.95~~	~~7.5~~
~~09A01~~	~~0.95~~	~~8.0~~
~~10A01~~	~~0.95~~	~~8.5~~
~~11A01~~	~~0.95~~	~~8.1~~
~~12A01~~	~~0.95~~	~~7.8~~
~~13A01~~	~~0.95~~	~~8.8~~
~~14A01~~	~~0.95~~	~~8.4~~
~~16A01~~	~~0.85~~	~~5.5~~
~~03B01~~	~~0.85~~	~~6.0~~
~~09B01~~	~~0.95~~	~~8.8~~
~~12B01~~	~~0.95~~	~~7.5~~
~~14B01~~	~~0.95~~	~~8.2~~
~~16B01~~	~~0.85~~	~~5.8~~

~~5.2.3Test Two~~

~~Test two is similar to test one except that the cooling efficiency is increased and the heating efficiency is decreased, just the opposite of test one. When the changes in heating and cooling efficiency are made, additional energy use must result. *Total of 19 Runs.*~~

~~Table 5-4- Test Two Inputs~~

~~Run Label~~	~~New Heating Efficiency~~	~~New Cooling Efficiency~~
~~02A02~~	~~0.65~~	~~12.5~~
~~03A02~~	~~0.72~~	~~12.5~~
~~04A02~~	~~0.66~~	~~12.5~~
~~05A02~~	~~0.65~~	~~12.5~~
~~06A02~~	~~0.55~~	~~12.5~~
~~07A02~~	~~0.50~~	~~12.5~~
~~08A02~~	~~0.49~~	~~12.5~~
~~09A02~~	~~0.45~~	~~12.5~~
~~10A02~~	~~0.45~~	~~12.5~~
~~11A02~~	~~0.63~~	~~12.5~~
~~12A02~~	~~0.62~~	~~12.5~~
~~13A02~~	~~0.52~~	~~12.5~~
~~14A02~~	~~0.57~~	~~12.5~~
~~16A02~~	~~0.75~~	~~12.5~~
~~03B02~~	~~0.70~~	~~12.5~~
~~09B02~~	~~0.46~~	~~12.5~~
~~12B02~~	~~0.61~~	~~12.5~~
~~14B02~~	~~0.59~~	~~12.5~~
~~16B02~~	~~0.74~~	~~12.5~~

~~5.2.4Test Three~~

~~Test three is performed only for prototype A in five climate zones, 3, 9, 12, 14 and 16. The ceiling U-value is reduced to 0.023 from the basecase of 0.033. The south glass area is increased a specific amount for each climate zone. Each of these computer runs must result in greater energy use than the prototype A basecase. *Total of five runs.*~~

~~Table 5-5 - Test Three Inputs~~

~~Run Label~~	~~Roof U-value~~	~~South Glass Area~~
~~03A03~~	~~0.023~~	~~200~~
~~09A03~~	~~0.023~~	~~120~~
~~12A03~~	~~0.023~~	~~140~~
~~14A03~~	~~0.023~~	~~160~~
~~16A03~~	~~0.023~~	~~160~~

~~5.2.5Test Four~~

~~Test four is performed only for prototype A in five climate zones, 3, 9, 12, 14 and 16. The wall U-value is reduced to 0.060 from the basecase of 0.088. The west glass area is increased a specific amount for each~~

climate zone. Each of these computer runs must result in greater energy use than prototype A. *Total of five runs.*

Table 5-6 - Test Four Inputs

Run Label	Wall U-value	West Glass Area
03A04	0.060	170
09A04	0.060	130
12A04	0.060	119
14A04	0.060	121
16A04	0.060	150

5.2.6Test Five

Test five is performed only for prototype A in five climate zones, 3, 9, 12, 14 and 16. R-7 slab edge insulation is added, i.e. an F2 factor of 0.65 is used instead of the 0.76 used in the basecase. The north glass area is increased a specific amount for each climate zone. Each of these computer runs must result in greater energy use than prototype A. *Total of five runs.*

Table 5-7 - Test Five Inputs

Run Label	F2 Factor	North Glass Area
03A05	0.51	220.5
09A05	0.51	150
12A05	0.51	170
14A05	0.51	160
16A05	0.51	180

5.2.7Test Six

Test six is performed only for prototype A in four climate zones: 9, 12, 14 and 16. The glazing U-value is changed to 0.54 instead of the 0.75 used in the basecase. The north glass area is increased a specific amount for each climate zone. Each of these computer runs must result in greater energy use than prototype A. *Total of four runs.*

Table 5-8 - Test Six Inputs

Run Label	Glazing U-value	North Glass Area
09A06	0.54	192
12A06	0.54	286
14A06	0.54	269
16A06	0.54	300

5.2.8Test Seven

Test seven is performed only for prototype A in five climate zones: 3, 9, 12, 14 and 16. The fenestration U-value is increased to 1.28 (single glass) from the basecase 0.75 (mild climate zone standard) . The solar heat

~~gain coefficients for the window are also changed to account for the single glass ($SHGC_{fen}$ = 0.80). The glass area is reduced uniformly on all orientations. Ventilation area also varies with glass area, remaining at 10% of the total area. Each of these computer runs must result in greater energy use than prototype A. *Total of five runs*~~

~~**Table 5-9 - Test Seven Inputs**~~

~~Run Label~~	~~Glass U-value~~	~~$SHGC_{fen}$~~	~~Glass Area on Each Orientation~~
~~03A07~~	~~1.28~~	~~0.80~~	~~55~~
~~09A07~~	~~1.28~~	~~0.80~~	~~71~~
~~12A07~~	~~1.28~~	~~0.80~~	~~65~~
~~14A07~~	~~1.28~~	~~0.80~~	~~63~~
~~16A07~~	~~1.28~~	~~0.80~~	~~51~~

~~5.2.9 Test Eight~~

~~Test eight is performed only for prototype A in five climate zones: 3, 9, 12, 14 and 16. The percent of the slab-on-grade that is exposed thermal mass is increased: 500 ft^2 is exposed and 1100 ft^2 is carpeted. The slab edge heat loss, however, is unaffected; the F2 factor remains at 0.76. The south glass area is increased a specific amount for each climate zone. Each of these computer runs must result in greater energy use than prototype A. *Total of five runs.*~~

~~**Table 5-10 - Test Eight Inputs**~~

~~Run Label~~	~~Exposed Mass~~	~~South Glass Area~~
~~03A08~~	~~31.25%~~	~~195~~
~~09A08~~	~~31.25%~~	~~128~~
~~12A08~~	~~31.25%~~	~~131~~
~~14A08~~	~~31.25%~~	~~160~~
~~16A08~~	~~31.25%~~	~~128~~

~~5.2.10 Test Nine~~

~~Test nine is identical to test eight except west glass area is increased. This test is performed only for prototype A in five climate zones: 3, 9, 12, 14, and 16. Each of these computer runs must result in greater energy use than prototype A. *Total of five runs.*~~

~~**Table 5-11 - Test Nine Results**~~

~~Run Label~~	~~Exposed Mass~~	~~West Glass Area~~
~~03A09~~	~~31.25%~~	~~158~~
~~09A09~~	~~31.25%~~	~~131~~
~~12A09~~	~~31.25%~~	~~118~~
~~14A09~~	~~31.25%~~	~~113~~
~~16A09~~	~~31.25%~~	~~128~~

~~5.2.11Test Ten~~

~~Test ten is identical to test eight except north glass area is increased. This test is performed only for prototype A in five climate zones: 3, 9, 12, 14 and 16. Each of these computer runs must result in greater energy use than prototype A. *Total of five runs.*~~

~~**Table 5-12 - Test Ten Results**~~

~~Run Label~~	~~Exposed Mass~~	~~North Glass Area~~
~~03A10~~	~~31.25%~~	~~152~~
~~09A10~~	~~31.25%~~	~~199~~
~~12A10~~	~~31.25%~~	~~141~~
~~14A10~~	~~31.25%~~	~~126~~
~~16A10~~	~~31.25%~~	~~112~~

~~5.2.12Test Eleven~~

~~Test eleven is identical to test eight except east glass area is increased. This test is performed only for prototype A in five climate zones: 3, 9, 12, 14 and 16. Each of these computer runs must result in greater energy use than the prototype A basecase. *Total of five runs.*~~

~~Table 5-13 - Test Eleven Results~~

~~Run Label~~	~~Exposed Mass~~	~~East Glass Area~~
~~03A11~~	~~31.25%~~	~~184~~
~~09A11~~	~~31.25%~~	~~150~~
~~12A11~~	~~31.25%~~	~~127~~
~~14A11~~	~~31.25%~~	~~117~~
~~16A11~~	~~31.25%~~	~~119~~

~~5.2.13Test Twelve~~

~~Test twelve is performed only for prototype A in five climate zones, 3, 9, 12, 14 and 16. The floor is changed from a slab-on-grade floor to a raised wooden floor over a crawl space with an overall U-value of 0.037. Exterior shading devices are used in other climate zones 9, 12 and 14 on all windows, to achieve the $SHGC_{fen}$ values indicated below. Glass area on the west facade is increased a specific amount for each climate zone. Each of these computer runs must result in greater energy use than prototype A. *Total of five runs.*~~

~~Table 5-14 - Test Twelve Inputs~~

~~Run Label~~	~~Raised Floor U-value~~	~~$SHGC_{fen}$~~	~~West Glass Area~~
~~03A12~~	~~0.037~~	~~0.80~~	~~64~~
~~09A12~~	~~0.037~~	~~0.40~~	~~180~~
~~12A12~~	~~0.037~~	~~0.40~~	~~125~~
~~14A12~~	~~0.037~~	~~0.40~~	~~140~~
~~16A12~~	~~0.037~~	~~0.80~~	~~120~~

~~5.2.14Test Thirteen~~

~~In test thirteen, an interior shading device is used on all windows which has a solar heat gain coefficient of 0.47 when the device is used with single pane, metal-framed fenestration ($SHGC_{fen}$ = 0.80) and is closed. The area of south glass is increased a specific amount for each climate zone. This test is performed for the prototype A building in five climates. Each of these computer runs must result in greater energy use than the prototype A basecase. *Total of five runs.*~~

~~**Table 5-15 - Test Thirteen Inputs**~~

~~Run Label~~	~~SHGC Interior Shade~~	~~South Glass Area~~
~~03A13~~	~~0.47~~	~~200~~
~~09A13~~	~~0.47~~	~~200~~
~~12A13~~	~~0.47~~	~~222~~
~~14A13~~	~~0.47~~	~~244~~
~~16A13~~	~~0.47~~	~~160~~

~~5.2.15Test Fourteen~~

~~Test fourteen evaluates how the ACM treats south overhangs. It is performed for the prototype A building in five climate zones: 3, 9, 12, 14 and 16. In each case a south overhang is added to the building. The overhang has a two foot projection from the surface of the south glass. Its bottom edge is located six inches above the top of the window. It is assumed that the south glazing consists of six-foot six-inch high windows. The overhang is assumed to extend an infinite distance beyond the sides of the windows. The overhang characteristics are illustrated below. South glazing area is then increased by increasing its width. Each case must result in greater energy use than prototype A. *Total of five runs.*~~

~~**Table 5-16 - Test Fourteen Inputs**~~

~~Run Label~~	~~South Overhang~~	~~South Glass Area~~
~~03A14~~	~~yes~~	~~169~~
~~09A14~~	~~yes~~	~~132~~
~~12A14~~	~~yes~~	~~144~~
~~14A14~~	~~yes~~	~~129~~
~~16A14~~	~~yes~~	~~100~~

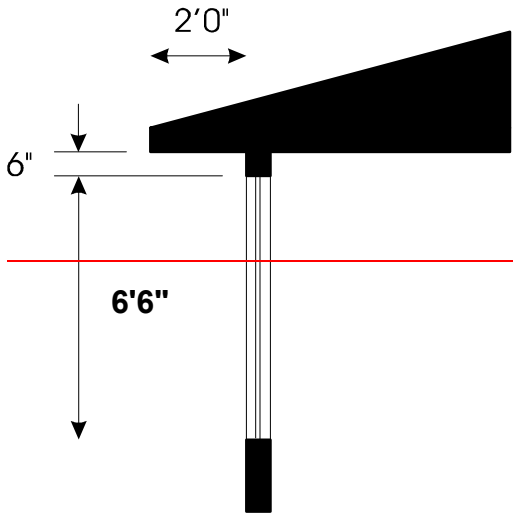

~~Figure 5-3 - Overhang Characteristics~~

~~5.2.16Test Fifteen~~

~~This test is for the infiltration and ventilation model. It is performed for the prototype A building in five climate zones: 3, 9, 12, 14 and 16. The basecase building has ducts in unconditioned space, therefore, the fixed and restricted inputs specify a SLA of 4.9. In this test building leakage is reduced to an SLA of 2.9 by infiltration reduction measures and is modeled with and without 80 cfm (0.375 air changes per hour) of mechanical ventilation which consumes 20 watts of power continuously. Glass area is increased on all orientations so that the building fails to comply. *Total of ten runs*.~~

~~Table 5-17 - Test Fifteen Inputs~~

~~Run Label~~	~~Specific Leakage Area~~	~~Fan Volume & Wattage~~	~~Maximum Glass Area on Each Orientation A/B~~
~~03A15A~~	~~2.90~~	~~0 cfm/0 watts~~	~~131~~
~~03A15B~~	~~2.90~~	~~80 cfm/20 watts~~	~~110~~
~~09A15A~~	~~2.90~~	~~0 cfm/0 watts~~	~~100~~
~~09A15B~~	~~2.90~~	~~80 cfm/20 watts~~	~~96~~
~~12A15A~~	~~2.90~~	~~0 cfm/0 watts~~	~~100~~
~~12A15B~~	~~2.90~~	~~80 cfm/20 watts~~	~~80~~
~~14A15A~~	~~2.90~~	~~0 cfm/0 watts~~	~~100~~
~~14A15B~~	~~2.90~~	~~80 cfm/20 watts~~	~~80~~
~~16A15A~~	~~2.90~~	~~0 cfm/0 watts~~	~~100~~
~~16A15B~~	~~2.90~~	~~80 cfm/20 watts~~	~~72~~

~~5.3Water Heating Tests~~

~~Testing of ACM minimum capabilities for water heating is completely separate from the space conditioning tests. One of the principal differences between water heating and space conditioning is that fixed energy budgets are used for water heating rather than custom budgets. The testing procedures are, therefore, fundamentally different. Candidate ACMs must exactly replicate the results of the official CEC water heating methodology for various system types.~~

~~5.3.1Prototype Water Heaters~~

~~There are seven water heaters that are used for the tests. These systems are labeled E, F, G, and J. Detailed specifications for each water heating system are given in Table~~ **~~Error! Reference source not found.~~** ~~below. The energy use of each of the water heating systems is calculated with several distribution systems.~~

~~**Table 5-18 - Water Heating Systems**~~

		E	F	G	J
System Level Information					
Climate Zone		3	7	16	5
Dwelling Units		10	1	1	3
Average Dwelling Unit Size		1200	1500	3500	800
Number of Water Heaters		5	1	2	6
Water Heating Equipment					
Water Heater Type		LG	HP	HP	IE
Energy Factor (Note 1)		0.77	2.00	1.80	0.95
Tank Size	Gal	100	50	75	na.
Standby Loss	%	3%.	n.a.	n.a.	n.a.
Input Rating	kBtu/h	100	n.a.	n.a.	n.a.

Notes
1. For instantaneous gas (IG) and large gas (LG) water heaters the value reported in this row is the recovery efficiency or thermal efficiency.

~~5.3.2Labeling Computer Runs~~

~~Each water heating calculation is given a precise designation to make it easier to keep track of the runs and to facilitate analysis. The following scheme is used:~~

~~12 F POU~~

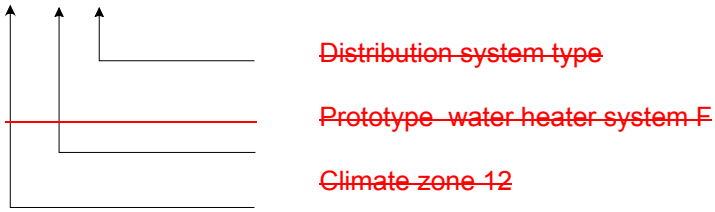

~~5.3.3Test Results~~

~~Water heater types E, F, G, and J are analyzed in just one climate zone (except for heat pumps, the results should not change by climate zone). The results must exactly replicate the values shown in the following tables. A summary sheet is provided in Appendix A that must be completed by the vendor. *Total of 40 calculations.*~~

~~Table 5-19 - Water Heater Results (kBtu/yr)~~

		E	F	G	J
Energy Budget		221.900	23.645	28.495	60.750
Distribution System	DSM				
Standard	1	218.208	18.064	45.731	85.085
POU/HWR	0.82	na	15.875	43.940	na
Pipe Insulation	0.92	207.304	17.100	47.178	78.278
Recirc/NoControl	1.52	289.082	24.080	65.630	129.329
Recirc/Timer	1.28	na	21.345	58.427	na
Recirc/Demand	0.98	na	17.824	49.096	na
Recirc/Time+Temp	0.96	na	17.583	48.459	na
Recirc/Temp	1.05	225.023	18.660	51.310	89.339
Parallel Piping	0.86	199.126	16.367	45.242	73.123

~~*5.4Standard Design Generator Tests*~~

~~The standard design generator must automatically define the standard design which is the basis of the custom budget. The standard design run is made automatically at the same time as the proposed design run, and the results are reported together on the Computer Method Summary discussed in Chapter 2. This test verifies that the standard design is correctly defined for the proposed design and that the custom budget is correctly calculated.~~

~~The standard design test consists of matched pairs of computer runs: a proposed design and its standard design equivalent. The standard design equivalent is the proposed design reconfigured according to the standard design rules in Chapter 3.~~

~~Two Computer Method Summaries are produced: one for the proposed design and one for the standard design equivalent. The standard design energy budget on the proposed design Computer Method Summary must be equal to the energy use shown in both the standard design energy budget and proposed design columns of the standard design equivalent computer run.~~

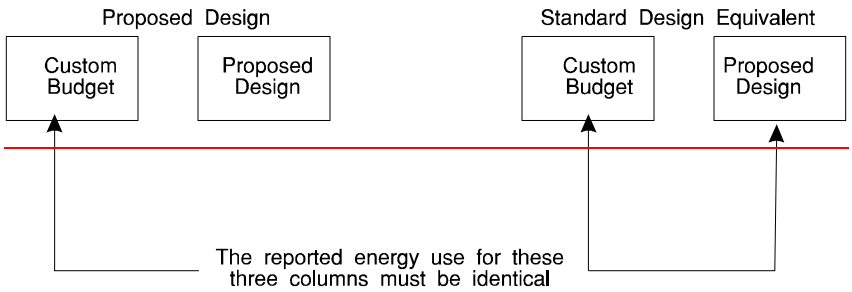

~~**Figure 5-4 - Custom Budget Tests**~~

~~5.4.1Slab Floor Test~~

~~The purpose of this test is to verify that the standard design generator correctly defines the standard design for proposed designs using slab-on-grade designs. Package D is now the basis of the standard design for all buildings including slab-on-grade buildings. The rules for determining how much thermal mass is modeled in buildings with both raised and slab-on-grade construction are contained in Chapters 3 and 4. The prototype C variation used for this test has both raised floors and slab-on-grade floors.~~

~~Prototype "xxC31" is run in all sixteen climate zones, and the standard design equivalent in each climate zone is also run. The results must be exactly identical as discussed above. The labels for this series of runs are summarized in the following table. *Total of 32 runs.*~~

~~Table 5-20 - Slab Floor Standard Design Tests~~

~~Climate Zone~~	~~Proposed Design~~	~~Standard Design Equivalent~~
~~1~~	~~01C31~~	~~01C31C~~
~~2~~	~~02C31~~	~~02C31C~~
~~3~~	~~03C31~~	~~03C31C~~
~~4~~	~~04C31~~	~~04C31C~~
~~5~~	~~05C31~~	~~05C31C~~
~~6~~	~~06C31~~	~~06C31C~~
~~7~~	~~07C31~~	~~07C31C~~
~~8~~	~~08C31~~	~~08C31C~~
~~9~~	~~09C31~~	~~09C31C~~
~~10~~	~~10C31~~	~~10C31C~~
~~11~~	~~11C31~~	~~11C31C~~
~~12~~	~~12C31~~	~~12C31C~~
~~13~~	~~13C31~~	~~13C31C~~
~~14~~	~~14C31~~	~~14C31C~~
~~15~~	~~15C31~~	~~15C31C~~
~~16~~	~~16C31~~	~~16C31C~~

~~5.4.2Raised Floor Test~~

~~The purpose of this test is to verify that the standard design generator correctly defines the standard design for a proposed design for a dwelling with a raised floor. This is a parallel test to the previous one except that a modification of the prototype building is used which is the prototype C building with no slab floor but with 5% of the nonslab floor covered with 2 inches of exposed concrete. This modification is labeled "xxC32" and is contained in Appendix C in the standard format of the Computer Method Summary.~~

~~The modified prototype C building is run in all sixteen climate zones, and the standard design equivalent in each climate zone is also run. The results must be exactly identical. The labels for this series of runs are summarized in the following table. *Total of 32 runs.*~~

~~Table 5-21 - Raised Floor Standard Design Tests~~

~~Climate Zone~~	~~Proposed Design~~	~~Standard Design Equivalent~~
~~1~~	~~01C32~~	~~01C32C~~
~~2~~	~~02C32~~	~~02C32C~~
~~3~~	~~03C32~~	~~03C32C~~
~~4~~	~~04C32~~	~~04C32C~~
~~5~~	~~05C32~~	~~05C32C~~
~~6~~	~~06C32~~	~~06C32C~~
~~7~~	~~07C32~~	~~07C32C~~
~~8~~	~~08C32~~	~~08C32C~~
~~9~~	~~09C32~~	~~09C32C~~
~~10~~	~~10C32~~	~~10C32C~~
~~11~~	~~11C32~~	~~11C32C~~
~~12~~	~~12C32~~	~~12C32C~~
~~13~~	~~13C32~~	~~13C32C~~
~~14~~	~~14C32~~	~~14C32C~~
~~15~~	~~15C32~~	~~15C32C~~
~~16~~	~~16C32~~	~~16C32C~~

~~5.4.3Electric Heat Test~~

~~The purpose of this test is to verify that the standard design generator correctly defines the standard design for proposed designs with electric heating systems. This a parallel test to the previous custom budget tests, except that a modification of the prototype building is used. This modification is labeled "xxC33" and is contained in Appendix C in the standard format of the Computer Method Summary.~~

~~The modified prototype C building with electric resistance heating is run in all sixteen climate zones, and the standard design equivalent which uses an electric heat pump with an HSPF of 6.8 in each climate zone is also run. The results for the *Standard Designs* for both runs and the *Proposed Design* for the *Standard Design* equivalent must be exactly identical. The labels for this series of runs are summarized in the following table. *Total of 32 runs.*~~

~~Table 5-22 - Electric Heat Standard Design Tests~~

~~Climate Zone~~	~~Proposed Design~~	~~Standard Design Equivalent~~
~~1~~	~~01C33~~	~~01C33C~~
~~2~~	~~02C33~~	~~02C33C~~
~~3~~	~~03C33~~	~~03C33C~~
~~4~~	~~04C33~~	~~04C33C~~
~~5~~	~~05C33~~	~~05C33C~~
~~6~~	~~06C33~~	~~06C33C~~
~~7~~	~~07C33~~	~~07C33C~~
~~8~~	~~08C33~~	~~08C33C~~
~~9~~	~~09C33~~	~~09C33C~~
~~10~~	~~10C33~~	~~10C33C~~
~~11~~	~~11C33~~	~~11C33C~~
~~12~~	~~12C33~~	~~12C33C~~
~~13~~	~~13C33~~	~~13C33C~~
~~14~~	~~14C33~~	~~14C33C~~
~~15~~	~~15C33~~	~~15C33C~~
~~16~~	~~16C33~~	~~16C33C~~

~~5.4.4HVAC Distribution Efficiency Tests~~

~~The Standard Design uses the defaults of the HVAC distribution efficiency calculation method found in Appendix F to determine the HVAC distribution efficiency. These defaults result in seasonal HVAC distribution efficiencies of about 72-76% depending on the climate zone. The calculation method detailed in Appendix F gives efficiency credits for certain specific improvements in the HVAC distribution system, such as, higher duct insulation levels, careful duct design and layout, and reduced duct leakage due to better sealing techniques. HVAC distribution efficiency improvements must be independently verified and some are subject to site diagnostic testing by a certified HERS rater.~~

~~For these tests prototype building A is used. For the first series of tests, the ducts are designed to conform to ACCA Manual D specifications with room-by-room load calculations and have a duct layout design on the plans. The ducts are sealed and tested. The results must replicate the values shown in the following table.~~

~~**Table 5-23 - Duct Efficiency Tests**~~

~~Run Label~~	~~Standard Heating Duct Efficiency~~	~~Standard Cooling Duct Efficiency~~	~~ACCA Manual D Design~~	~~Tested Duct Leakage~~	~~Heating Duct Efficiency~~	~~Cooling Duct Efficiency~~
~~03A34~~	~~0.759~~	~~0.730~~	~~Yes~~	~~Yes~~	~~0.827~~	~~0.850~~
~~09A34~~	~~0.753~~	~~0.702~~	~~Yes~~	~~Yes~~	~~0.822~~	~~0.838~~
~~12A34~~	~~0.743~~	~~0.674~~	~~Yes~~	~~Yes~~	~~0.815~~	~~0.817~~
~~14A34~~	~~0.709~~	~~0.617~~	~~Yes~~	~~Yes~~	~~0.789~~	~~0.775~~
~~16A34~~	~~0.686~~	~~0.730~~	~~Yes~~	~~Yes~~	~~0.773~~	~~0.850~~
~~03A35~~	~~0.759~~	~~0.730~~	~~No~~	~~Yes~~	~~0.827~~	~~0.786~~
~~09A35~~	~~0.753~~	~~0.702~~	~~No~~	~~Yes~~	~~0.822~~	~~0.775~~
~~12A35~~	~~0.743~~	~~0.674~~	~~No~~	~~Yes~~	~~0.815~~	~~0.756~~
~~14A35~~	~~0.709~~	~~0.617~~	~~No~~	~~Yes~~	~~0.789~~	~~0.717~~
~~16A35~~	~~0.686~~	~~0.730~~	~~No~~	~~Yes~~	~~0.773~~	~~0.786~~

~~For the second series of tests, duct location is run for six tests with 10 lineal feet of ducts and the air handler are in an unconditioned garage and the remainder of the ducts are in conditioned space. The tests are rerun with all of the ducts and the air handler in the conditioned space. For all of the tests in this series, ducts are sealed and tested. The results must replicate the values shown in the following table.~~

~~**Table 5-24 – Duct Efficiency Tests**~~

~~Run Label~~	~~Standard Heating Duct Efficiency~~	~~Standard Cooling Duct Efficiency~~	~~Duct Location~~	~~Tested Duct Leakage~~	~~Heating Duct Efficiency~~	~~Cooling Duct Efficiency~~
~~03A36~~	~~0.759~~	~~0.730~~	~~Cond./InEx12~~	~~Yes~~	~~0.920~~	~~0.860~~
~~09A36~~	~~0.753~~	~~0.702~~	~~Cond./InEx12~~	~~Yes~~	~~0.917~~	~~0.846~~
~~12A36~~	~~0.743~~	~~0.674~~	~~Cond./IInEx12~~	~~Yes~~	~~0.914~~	~~0.836~~
~~14A36~~	~~0.709~~	~~0.617~~	~~Cond./IInEx12~~	~~Yes~~	~~0.902~~	~~0.815~~
~~16A36~~	~~0.686~~	~~0.730~~	~~Cond./IInEx12~~	~~Yes~~	~~0.894~~	~~0.860~~

~~The ACM or its research version must report the duct efficiencies for the HVAC distribution efficiency tests.~~

~~5.4.5Addition Plus Existing Building Test~~

~~Additions are treated as new buildings except that internal heat gains are allocated on a fractional dwelling unit basis. When an addition is modeled in conjunction with an existing building, energy credit may be taken for improvements to the existing building. This series of tests exercises the various default assumptions based on the vintage of the existing building and the various reporting requirements for modeling an addition with an~~

~~existing building. In addition, these tests verify the proper determination of the energy budget and compliance criteria for an addition with an improved existing building.~~

~~For these tests the existing building has the same physical configuration as Prototype A but has single pane, metal-framed windows on all four sides with a window on each vertical elevation that is 4' high and 20' wide centered on the facade. The 12' deep by 40' long addition covers the whole west side of the existing building. The addition faces west and has west facing glazing with a U-value of 0.75 and an $SHGC_{fen}$ of 0.70. The addition covers 80 ft^2 of existing glass. For test series 37, the mandatory minimum R-values are used in the addition's roof/ceiling and walls. Hence for test series 37, the U-value for the roof/ceiling of the addition is 0.047 corresponding to R-19 insulation and the wall U-value is 0.088 corresponding to R-13 wall insulation. For test series 38, the existing building's roof and the addition roof insulation is brought up to the requirements for a new dwelling. The addition's west-facing glazing is increased until the building no longer complies with the budget determined from modeling the existing building and modeling the addition and area weighting the heating and cooling budgets for those runs.~~

~~These tests will also be used to confirm that output requirements are met when modeling an addition with an existing building and that the appropriate budgets have been correctly determined.~~

~~**Table 5-25 Additions Tests Inputs**~~

~~Run Label~~	~~Vintage of Existing Building~~	~~$SHGC_{fen}$~~	~~Covered Existing Glazing~~	~~U-Value of Roof/Ceiling Existing/Add.~~	~~West Facing Glazing for the Addition (ft^2)~~
~~03D37~~	~~1977~~	~~0.70~~	~~80 ft^2~~	~~0.077/0.047~~	~~380~~
~~09D37~~	~~1977~~	~~0.70~~	~~80 ft^2~~	~~0.077/0.047~~	~~270~~
~~12D37~~	~~1977~~	~~0.70~~	~~80 ft^2~~	~~0.077/0.047~~	~~320.~~
~~14D37~~	~~1977~~	~~0.70~~	~~80 ft^2~~	~~0.077/0.047~~	~~360~~
~~16D37~~	~~1977~~	~~0.70~~	~~80 ft^2~~	~~0.077/0.047~~	~~370~~
~~03D38~~	~~1989~~	~~0.70~~	~~80 ft^2~~	~~0.034/0.034~~	~~20~~
~~09D38~~	~~1989~~	~~0.70~~	~~80 ft^2~~	~~0.034/0.0-34~~	~~100~~
~~12D38~~	~~1989~~	~~0.70~~	~~80 ft^2~~	~~0.034/0.034~~	~~80~~
~~14D38~~	~~1989~~	~~0.70~~	~~80 ft^2~~	~~0.028/0.028~~	~~80~~
~~16D38~~	~~1989~~	~~0.70~~	~~80 ft^2~~	~~0.028/0.028~~	~~8~~

~~5.4.6Cooling System SSEER Tests~~

~~Calculation of the source SEER (SSEER) for air conditioners is described in Chapter 3. To test this calculation, a series of different air conditioner configurations are modeled using prototype building A. The $SSEER_{prototype}$ parameters assume a split system air conditioner, 10 SEER, with duct sealing. Duct design is not used and TXVs are included in climate zones 9, 12 and 14. Ducts are located in the attic with R4.2 insulation for all tests. Four separate $SSEER_{test}$ configurations are used as specified in the following table. The results must replicate the values shown in the following table.~~

~~Table 5-26 – SSEER Tests~~

~~Run Label~~	~~SSEER prototype~~	~~System Type~~	~~SEER~~	~~TXV~~	~~Duct Sealing~~	~~ACCA Manual D Duct Design~~	~~SSEER test~~
~~03A39~~	~~6.528~~	~~SplitAirCond~~	~~12~~	~~Yes~~	~~Yes~~	~~Yes~~	~~8.977~~
~~09A39~~	~~6.899~~	~~SplitAirCond~~	~~12~~	~~Yes~~	~~Yes~~	~~Yes~~	~~8.435~~
~~12A39~~	~~6.591~~	~~SplitAirCond~~	~~12~~	~~Yes~~	~~Yes~~	~~Yes~~	~~8.001~~
~~14A39~~	~~6.003~~	~~SplitAirCond~~	~~12~~	~~Yes~~	~~Yes~~	~~Yes~~	~~7.182~~
~~16A39~~	~~6.495~~	~~SplitAirCond~~	~~12~~	~~Yes~~	~~Yes~~	~~Yes~~	~~8.915~~
~~03A40~~	~~6.528~~	~~SplitAirCond~~	~~10.5~~	~~Yes~~	~~No~~	~~No~~	~~7.068~~
~~09A40~~	~~6.899~~	~~SplitAirCond~~	~~10.5~~	~~Yes~~	~~No~~	~~No~~	~~6.553~~
~~12A40~~	~~6.591~~	~~SplitAirCond~~	~~10.5~~	~~Yes~~	~~No~~	~~No~~	~~6.161~~
~~14A40~~	~~6.003~~	~~SplitAirCond~~	~~10.5~~	~~Yes~~	~~No~~	~~No~~	~~5.413~~
~~16A40~~	~~6.495~~	~~SplitAirCond~~	~~10.5~~	~~Yes~~	~~No~~	~~No~~	~~7.026~~
~~03A41~~	~~6.528~~	~~SplitAirCond~~	~~19~~	~~No~~	~~No~~	~~No~~	~~10.004~~
~~09A41~~	~~6.899~~	~~SplitAirCond~~	~~19~~	~~No~~	~~No~~	~~No~~	~~8.207~~
~~12A41~~	~~6.591~~	~~SplitAirCond~~	~~19~~	~~No~~	~~No~~	~~No~~	~~7.210~~
~~14A41~~	~~6.003~~	~~SplitAirCond~~	~~19~~	~~No~~	~~No~~	~~No~~	~~5.563~~
~~16A41~~	~~6.495~~	~~SplitAirCond~~	~~19~~	~~No~~	~~No~~	~~No~~	~~9.823~~
~~03A42~~	~~6.528~~	~~PkgAirCond~~	~~11.7~~	~~No~~	~~Yes~~	~~Yes~~	~~8.201~~
~~09A42~~	~~6.899~~	~~PkgAirCond~~	~~11.7~~	~~No~~	~~Yes~~	~~Yes~~	~~7.731~~
~~12A42~~	~~6.591~~	~~PkgAirCond~~	~~11.7~~	~~No~~	~~Yes~~	~~Yes~~	~~7.348~~
~~14A42~~	~~6.003~~	~~PkgAirCond~~	~~11.7~~	~~No~~	~~Yes~~	~~Yes~~	~~6.621~~
~~16A42~~	~~6.495~~	~~PkgAirCond~~	~~11.7~~	~~No~~	~~Yes~~	~~Yes~~	~~8.145~~

6. Optional Capabilities Tests

6.1 Overview

This chapter of the Manual explains the tests that must be performed in order for residential ACMs to be approved for optional capabilities. See the Overview section of Chapter 5 for details. There are two sets of optional capabilities. The first are for space conditioning and include hydronic heating systems, combined (with the water heater) hydronic heating, zonal control of space temperatures, sunspaces, side fins and exterior mass walls. The second set of capabilities relate to solar systems used for water heating applications. At this time, photovoltaic systems are not an optional capability.

6.2 Optional Space Conditioning Capabilities

6.2.1 Summary of Tests

The optional capabilities tests for space conditioning are summarized in Table R6-1. These tests use the same labeling scheme, test procedures, and prototypes as the minimum modeling capabilities (see Chapter 5).

Table R6-1 – Summary of the Optional Space Conditioning Tests

Type	Test	Prototypes	Climates	Optional Capability (Discrete Modification(s))	Continuous Variable
OC	1	A	3, 9, 12, 14, 16	**Dedicated Hydronic.** Replace the gas furnace and air distribution system with a gas boiler with hydronic baseboards and fan coils. See detailed description below. Produces a positive compliance margin.	**Fenestration U-factor**. Increase the fenestration U-factor on all orientations to find the Passing Solution and the Failing Solution.
OC	2	A	3, 9, 12, 14, 16	**Combined Hydronic, Gas Water Heater**. A 75 gallon storage gas water heater is used for both space conditioning and water heating. Hot water baseboards are used for heat distribution. Insulated pipes are used in unconditioned space.	**Fenestration U-factor**. Vary the U-factor of the fenestration to find the passing solution and the failing solution.
OC	3	A	3, 9, 12, 14, 16	**Combined Hydronic, Electric Resistance Water Heater**. An electric water heater is used for both space conditioning and water heating and air is distributed through a fan coil system that delivers air to ducts located in an attic.	**Fenestration U-factor**. Vary the U-factor of the fenestration to find the passing solution and the failing solution.
OC	4	A	3, 9, 12, 14, 16	**Combined Hydronic, Heat Pump Water Heater**. An electric heat pump is used for both space conditioning and water heating. Distribution is provided through hot water baseboards. All pipes are located within conditioned space.	**Fenestration U-factor**. Vary the U-factor of the fenestration to find the passing solution and the failing solution.
OC	5	B	3, 9, 12, 14, 16	**Control Vent Crawlspace**. See detailed description below. Produces a positive compliance margin.	**AFUE**. Reduce the heating equipment AFUE to find the Passing Solution and the Failing Solution.
OC	6	A	3, 9, 12, 14, 16	**Zonal Control**. See detailed description below. Produces a positive compliance margin.	**AFUE**. Reduce the heating equipment AFUE to find the Passing Solution and the Failing Solution.
OC	7	A	3, 9, 12, 14, 16	**Attached Sunspace**. See detailed description below. Produces a positive compliance margin.	**AFUE**. Reduce the heating equipment AFUE to find the Passing Solution and the Failing Solution.
OC	8	A	3, 9, 12, 14, 16	**Exterior Mass Walls**. See detailed description below. Produces a negative compliance margin.	**Wall R-value**. Increase the interior wall R-value to find the Passing Solution and the Failing Solution.
~~OC~~	~~9~~	~~A~~	~~3, 9, 12, 14, 16~~	~~**Gas Engine Driven Cooling**. Replace the basecase cooling system with an engine driven gas fired cooling system with a COP of 2.27. Produces a positive compliance margin.~~	~~**Fenestration U-factor**. Increase the fenestration U-factor on all orientations to find the Passing Solution and the Failing Solution.~~
OC	9 ~~10~~	A	3, 9, 12, 14, 16	**Gas Absorption Cooling.** Replace the basecase cooling system with an absorption gas cooling system with a COP of 3.3. Produces a positive compliance margin	**Fenestration U-factor**. Increase the fenestration U-factor on all orientations to find the Passing Solution and the Failing Solution.

6.2.2 Dedicated Hydronic Systems

Measure Description

Dedicated hydronic systems have boilers or other heating devices which produce hot water that is distributed through the building for heating. The system is commonly used in other areas of the country. Its use in California is limited. Heat is transferred through the building by water instead of air. Terminal heating units include fan coils, baseboards, radiant floors, or radiant ceilings. If large fan coils are used that distribute warm air through a conventional air distribution system, then the losses of the duct system must be accounted for in the same manner as gas furnaces.

Algorithms and Modeling Assumptions

Dedicated hydronic systems are modeled in a manner similar to a gas furnace, but the AFUE of the boiler is adjusted to account for pipes located outside the conditioned space. The ACM vendor shall include inputs for pipes located in unconditioned spaces. Inputs shall include the pipe length, diameter and insulation, as described in Chapter 2.

Equation R6-1

$$AFUE_{eff} = AFUE - \frac{PL}{RI}$$

Where

$AFUE_{eff}$ = The effective AFUE of the gas boiler that is providing space heat (unitless).

AFUE = The rated AFUE of the boiler (unitless).

PL = Annual Pipe losses (kBtu/h). This may be assumed to be zero when less than 10 feet of the piping (plan view) is located in unconditioned space. Pipe losses are calculated using the procedures described below.

RI = The rated input of the gas water heater (kBtu/h). This is available from the CEC appliance directory and other sources.

If heat is distributed with a fan coil, then the energy of the fan shall be accounted for in the same manner as for furnaces. The default fan energy is 0.005 Wh/Btu of heat delivered by the fan coil (not the entire heating system).

Hydronic systems are permitted when the AFUE is known and can be entered. When water heaters are used in hydronic systems for space heating alone (a separate water heater for domestic service), the water heater functions as a boiler and is required by NAECA to have a minimum AFUE of 0.80. The AFUE of a water heater if tested as a boiler would be approximately equal to the average of the EF and the RE, and will generally not meet the minimum NAECA requirement. Water heaters proposed for use in hydronic systems for space heating only must be tested as a boiler using the DOE AFUE and appropriate safety standard test procedures.

Test Description

For prototype A, the basecase heating system, consisting of a gas furnace and a forced air distribution system, is replaced with a dedicated hydronic system. The boiler has an AFUE of 85%. Twenty (20) ft of insulated pipe are located in unconditioned space. Heat is distributed with combination of fan coils (20 kBtu/h) and hydronic baseboards (40 kBtu/h). Water is circulated through the hydronic loop by a 1/8 hp pump. The pump motor meets the minimum efficiency requirements of the California appliance efficiency standards. Substituting this system will produce a positive compliance margin. The fenestration U-factor is then reduced to find the passing solution and the failing solution, according to the procedures described in Chapter 5. The CEC reference method must pass the passing solution and fail the failing solution.

The ACM vendor must also demonstrate that the software correctly produces the standard design. This requires that the vendor create a standard design equivalent building that matches the standard design for the system described above. When the standard design equivalent building is entered into the candidate ACM, the proposed design and standard design TDV energy must equal each other. The standard design equivalent energy must also equal the standard design energy for the test case.

6.2.3 Combined Hydronic Space/Water Heating

Measure Description

Combined hydronic space/water heating is a system whereby a water heater is used to provide both space heating and water heating. Dedicated hydronic space heating systems are also an optional capability covered in Section 6.2.2. Space heating terminals may include fan coils, baseboards, and radiant surfaces (floors, walls or ceilings).

Algorithms and Modeling Assumptions

For combined hydronic systems, the water heating portion is modeled in the normal manner. For space heating, an effective AFUE is calculated for gas water heaters. For electric water heaters or heat pumps, an effective HSPF is calculated. The procedures for calculating the effective AFUE or HSPF are described below.

When a fan coil is used to distribute heat, the fan energy and the heat contribution of the fan motor must be considered. The algorithms for fans used in combined hydronic systems are the same as those used for gas furnaces and are described in Chapter 4.

If a large fan coil is used and air distribution ducts are located in the attic, crawlspace or other unconditioned space, then the efficiency of the air distribution system must be determined using methods consistent with those described in Chapter 4. Duct efficiency is accounted for when the distribution type is "ducts."

Storage Gas Water Heater

When storage gas water heaters are used in combined hydronic applications, then the effective AFUE is given by the following equation.

Equation R6-2

$$AFUE_{eff} = RE - \frac{PL}{RI}$$

Where

$AFUE_{eff}$ = The effective AFUE of the gas water heater in satisfying the space heating load.

RE = The recovery efficiency of the gas water heater. A default value of 0.76 may be assumed if the recovery efficiency is unknown. However, this value is generally available from the CEC appliance directory.

PL = Pipe losses (kBtu/h). This can be assumed to be zero when less than 10 feet of the piping between the water heater storage tank and the fan coil or other heating elements is located in unconditioned space (see Equation R6-6).

RI = The rated input of the gas water heater (kBtu/h). This is available from the CEC appliance directory.

Storage Electric Water Heater

The HSPF of storage water heaters used for space heating in a combined hydronic system is given by the following equations.

Equation R6-3

$$HSPF_{eff} = 3.413\left[1 - \frac{PL}{3.413kWi}\right]$$

Where:

$HSPF_{eff}$ = The effective HSPF of the electric water heater in satisfying the space heating load.

PL = Pipe losses (kBtu/h). This can be assumed to be zero when less than 10 feet of the piping between the water heater storage tank and the fan coil or other heating elements are located in unconditioned space (see Equation R6-6).

kWI = The kilowatts of input to the water heater.

Heat Pump Water Heater

The HSPF of heat pump water heaters used for space heating in a combined hydronic system is given by the following equations. If the system has a fan coil, the $HSPF_{eff}$ is used. $HSPF_{w/o_fan}$ is used if there is no fan coil.

Equation R6-4

$$HSPF_{eff} = 3.413\left(\frac{RE_{hp}}{CZ_{adj}} - \frac{PL}{3.413kWi}\right)$$

where

$HSPF_{eff}$ = The effective HSPF of the heat pump water heater in satisfying the space heating load.

CZ_{adj} = The climate zone adjustment (see water heating calculation method) (see Table R 4-9).

PL = Pipe losses (kBtu/h). This can be assumed to be zero when less than 10 feet of the piping between the water heater storage tank and the fan coil or other heating elements is located in unconditioned space (see Equation R6-6).

kWI = The kilowatts of input.

RE_{hp} = The recovery efficiency of the heat pump water heater. Equation R6-5 may be used as a default if the recovery efficiency is not known.

Equation R6-5

$$RE_{hp} = \frac{1}{\frac{1}{EF_{DOE}} - 0.1175}$$

where

EF_{DOE} = The energy factor of the heat pump water heater when tested according to the DOE test procedure.

Pipe Losses

Pipe losses must be considered when pipes between the water heater storage tank and the fan coil or other heating element are located in unconditioned space. To simplify compliance, pipe losses can be ignored when no more than ten feet of pipe (in plan view) is located in unconditioned space. Hourly pipe loss rates (PLR) are given either from Equation R6-7 or from Table R6-2.

Equation R6-6

$$PL = \sum_{i=1}^{n} \frac{FT_i \times PLR_i}{8760}$$

PL = Hourly pipe loss (kBtu/h).

PLR_i = The annual pipe loss rate per foot of length for the ith pipe (kBtu/y-ft).

FT_i = The length in feet of the ith pipe located within unconditioned space. Can be assumed to be zero if less than ten feet in plan view.

n = The number of unique pipe size or insulation conditions.

The annual pipe loss rate per foot of length (PLRi) is calculated from the following equation

Equation R6-7

$$PLR_i = 8.76\left(\frac{T_s - T_a}{\frac{\ln\left(\frac{D_{io}}{D_{po}}\right)}{2\pi Ki} + \frac{1}{\pi ha D_{io}}}\right)$$

where

8.76 = Conversion factor from Btu/h to kBtu/y

T_s = Supply Temperature. This is assumed to be a constant 135 F.

T_a = Ambient Temperature. This is assumed to be 60.3 in all California climate zones.

D_{io} = Outside diameter of insulation. ft (actual not nominal).

D_{po} = Outside diameter of pipe, ft (actual not nominal).

Ki = Insulation conductivity, constant 0.023 Btu/h-ft-F

ha = Air film coefficient, constant 1.65 Btu/h-ft² -F

Table R6-2 – Annual Pipe Loss Rates (kBtu/y-ft)

	Insulation Thickness		
Nominal Pipe Size	1/2 inch	¾ inch	1 inch
1/2 inch	71.6	60.9	54.2
3/4 inch	91.1	75.8	66.6
1 inch	109.9	90.1	78.1
1 - 1/2 inch	146.7	117.5	100.3
2 inch	182.9	144.3	121.7

Test Description

The tests for combined hydronic systems are based on modifications to prototype A. Three different systems are added as discrete modifications. The test systems are described in Table R6-3

Table R6-3 – Combined Hydronic System Specifications

		Test Number		
		OC2A	OC3A	OC4A
Water Heater Type		SG	SE	HP
Recovery Efficiency	Unitless	0.76	n.a.	n.a.
Rated Input	Btu/h	60,000	n.a.	n.a.
Rated Input	KW	n.a.	5.00	n.a.
Wpump	W	n.a.	60.0	n.a.
EF	Unitless	n.a.	n.a.	2.00
Pipe Length in Unconditioned Space	Ft	100.0	n.a.	n.a.
Annual Pipe Loss Rate	kBtu/y-ft	71.6	n.a.	n.a.

For this series of tests, only the TDV energy for space conditioning is considered. The combined hydronic systems described above are added to the Prototype A building to replace the gas furnace. The ACM vendor shall change the fenestration U-factor on all orientations of the prototype to find the passing solution and the failing solution. The CEC reference method shall pass the passing solution and fail the failing solution.

In addition, the ACM vendor shall demonstrate that the software correctly defines the standard design for combined hydronic. This is achieved by creating and running the standard design equivalent building. For the standard design equivalent building, the TDV energy for the proposed design and the standard design must be equal. The standard design equivalent TDV energy must also equal the TDV energy for the standard design case of this test.

6.2.4 Controlled Ventilation Crawl Spaces (CVC)

Measure Description

A controlled ventilation crawlspace has insulation installed in the side walls of the crawlspace, instead of in the floor that separates conditioned space from the crawlspace. In addition, special dampers are used to provide the required ventilation for the crawlspace which open in the summer and close in the winter.

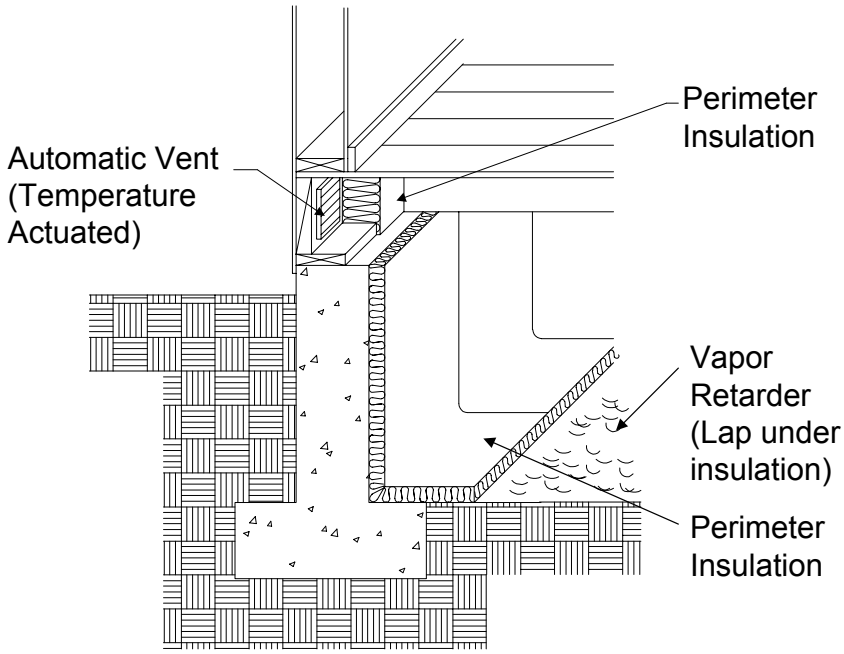

Figure R6-1 – Section at Crawlspace Perimeter

Algorithms and Modeling Assumptions

CVC requires that the ACM have the capability of modeling two thermal zones. The house itself if modeled as a conditioned zone and the crawlspace is modeled as an unconditioned zone.

Test Description

To test this optional capability the ACM vendor shall model prototype B in climate zones 3, 9, 12, 14, and 16. The CVC to be modeled shall have the following features:

- The CVC unconditioned zone has an exterior perimeter length and floor area (i.e., the ground area) equal to the prototype building B. Crawlspace volume is 3,467 ft^3.
- CVC infiltration is modeled using the air changes per hour method and uses 0.22 air changes per hour.
- The floor separating the crawl space from conditioned space is an inter-zone boundary. 400 ft^2 of this floor has a U-value of 0.342, representing an uninsulated, uncarpeted floor, and the remainder has a U-value of 0.199, representing an uninsulated, carpeted floor.
- Insulation that meets the floor insulation requirements used for compliance is placed in the perimeter walls of the crawl space.
- The crawl space vents are modeled with automatic seasonally operated louvers to minimize ambient conditions within the crawl space. When the building is in a heating mode, the vents are closed (inlet and outlet are zero). When the building is in a cooling mode, the vents are open and the total vent area is 1/150 of the crawlspace floor area or 10.67 ft^2. Half of this is inlet and half outlet.

- The ventilation height difference is zero. Only wind effects apply. Wind speed is reduced to 25% of that on the weather tape to account for ground level conditions.
- Heat capacity in the crawlspace is 1.4 Btu/F-ft^2.

This system is expected to produce a positive compliance margin. The heating equipment AFUE is then reduced to find the passing solution and the failing solution. The CEC reference method must pass the passing solution and fail the failing solution. Several eligibility criteria apply for CVC.

In addition, the vendor shall demonstrate that the ACM correctly defines the standard design building and calculates the custom budget. The vendor shall create and run the standard design equivalent building for climate zone 12. The proposed design and standard design TDV energy for the be equal. The TDV energy from the standard design equivalent must also equal the standard design TDV energy for this test.

Eligibility Criteria

Drainage. Proper enforcement of site engineering and drainage, and emphasis on the importance of proper landscaping techniques in maintaining adequate site drainage, is critical.

Ground Water And Soils. Local ground water tables at maximum winter recharge elevation should be below the lowest excavated site foundation elevations. Sites that are well drained and that do not have surface water problems are generally good candidates for this stem-wall insulation strategy. However, the eligibility of this alternative insulating technique is entirely at the building officials' discretion. Where disagreements exist, it is incumbent upon the applicant to provide sufficient proof that site drainage strategies (e.g., perimeter drainage techniques) will prevent potential problems.

Ventilation. All crawl space vents must have automatic vent dampers to receive this credit. Automatic vent dampers must be shown on the building plans and installed. The dampers should be temperature actuated to be fully closed at approximately 40°F and fully open at approximately 70°F. Cross ventilation consisting of the required vent area reasonably distributed between opposing foundation walls is required.

Foam Plastic Insulating Materials. Foam plastic insulating materials must be shown on the plans and installed when complying with the following requirements:

- Fire Safety—UBC Section 1712(b)2. Products shall be protected as specified. Certain products have been approved for exposed use in under floor areas by testing and/or listing.
- Direct Earth Contact—Foam plastic insulation used for crawl-space insulation having direct earth contact shall be a closed cell water resistant material and meet the slabedge insulation requirements for water absorption and water vapor transmission rate specified in the mandatory measures.

Mineral Wool Insulating Materials

- Fire Safety—UBC Section 1713(c). "All insulation including facings, such as vapor barriers or breather papers installed within ... crawl spaces ... shall have a flame-spread rating not to exceed 25 and a smoke density not to exceed 450 when tested in accordance with UBC. Standard No. 42-1." In cases where the facing is also a vapor retarder, the facing shall be installed to the side that is warm in winter.
- Direct Earth Contact—Mineral wool batts shall not be installed in direct earth contact unless protected by a vapor retarder/ground cover.

Vapor Barrier (Ground Cover). A ground cover of 6 mil (0.006 inch thick) polyethylene, or approved equal, shall be laid entirely over the ground area within crawl spaces.

- The vapor barrier shall be overlapped six inches minimum at joints and shall extend over the top of pier footings.
- The vapor barrier should be rated as 1.0 perm or less.
- The edges of the vapor barrier should be turned up a minimum of four inches at the stem wall.
- Penetrations in the vapor barrier should be no larger than necessary to fit piers, beam supports, plumbing and other penetrations.

- The vapor barrier must be shown on the plans and installed.

Studies show that moisture conditions found in crawl spaces that have minimal ventilation do not appear to be a significant problem for most building sites provided that the crawl-space floors are covered by an appropriate vapor barrier and other precautions are taken. The Energy Commission urges building officials to carefully evaluate each application of this insulating technique in conjunction with reduced ventilation because of the potential for adverse effects of surface water on crawl-space insulation that could negate the energy savings predicted by the procedure.

6.2.5 Zonal Control

Measure Description

Zonal control is one of the optional capabilities based on the ability of an ACM to model more than one conditioned thermal zone at the same time. With zonal control, the sleeping and living areas are modeled separately, each with its own separate thermostat schedule and internal gain assumptions. The specifications for zonal control are detailed in Chapter 4. Key features are discussed below.

Algorithms and Modeling Assumptions

The thermostat schedules are in Chapter 4 Table R4-1 . An alternate set of internal gain schedules is used: one for the living areas of the house and one for the sleeping areas. Both standard schedules and schedules for zonal control are shown in Chapter 4.

Test Description

For this test, prototype A is divided into living and sleeping zones as shown in Figure R6-2. The boundary between the zones consists of a wall with U-value of 0.29 and net area of 360 ft^2. The wall contains an uncloseable opening of 40 ft^2, modeled with a U-value of 20.0 Btu/h-ºF-ft².

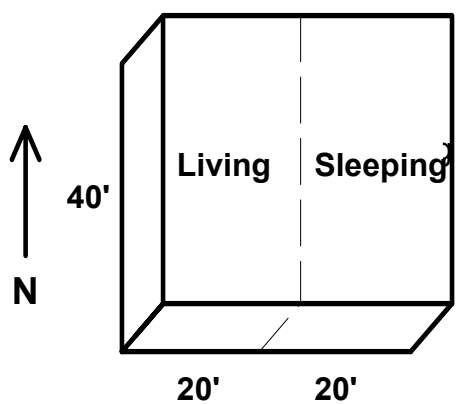

Figure R6-2 – Zoning the Prototype Building

Zonal control is added to prototype A as the discrete modification. The heating equipment AFUE is then reduced to find the passing solution and the failing solution as defined in Chapter 5. This test is performed in climate zones 3, 9, 12, 14, and 16. The CEC reference method must pass the passing solution and fail the failing solution.

The vendor shall also demonstrate that the ACM correctly defines the standard design building and calculates the custom budget correctly. The vendor shall create and run a standard design equivalent building in climate zone 12. In the standard design equivalent building, the proposed design and standard design TDV energy must equal each other. The standard design equivalent TDV energy must also equal the standard design energy for this test.

6.2.6 Sunspaces

Measure Description

A sunspace is a passive solar system consisting of an unconditioned space facing south or near south. The sunspace has a great deal of fenestration that collects solar energy and stores the energy in thermal mass elements such as a slab floor. The ACM must be capable of modeling two thermal zones in order for the sunspace feature to be approved.

Algorithms and Modeling Assumptions

Sunspaces shall be modeled as a separate, unconditioned thermal zone. An interzone vent separating the house from the sunspace is controlled to open only when temperature (T) conditions are $T_{house} < T_{desired}$ and $T_{sunspace} > T_{house}$ (in heating mode).

Assumptions for infiltration, heat capacity, solar gain targeting, and zone thermostat temperature settings vary from the conditioned zone. Internal gains in the sunspace are assumed to be zero. Sunspace zone infiltration is modeled using the air changes per hour method and the same infiltration of 0.50 air changes per hour. There are no restrictions on targeting solar gains that enter unconditioned spaces such as sunspaces.

Test Description

For this test, an unconditioned sunspace is added to the south side of Prototype A as illustrated in Figure R6-3 and Figure R6-4. The wall and window separating the sunspace and the house remain the same as in the base case, but the surfaces and vent openings of this wall are changed from exterior types to interzone types. The performance characteristics of sunspace envelope components are the same as for the basecase prototype. Total vent area is assumed to be 40 ft^2 with an eight foot height difference

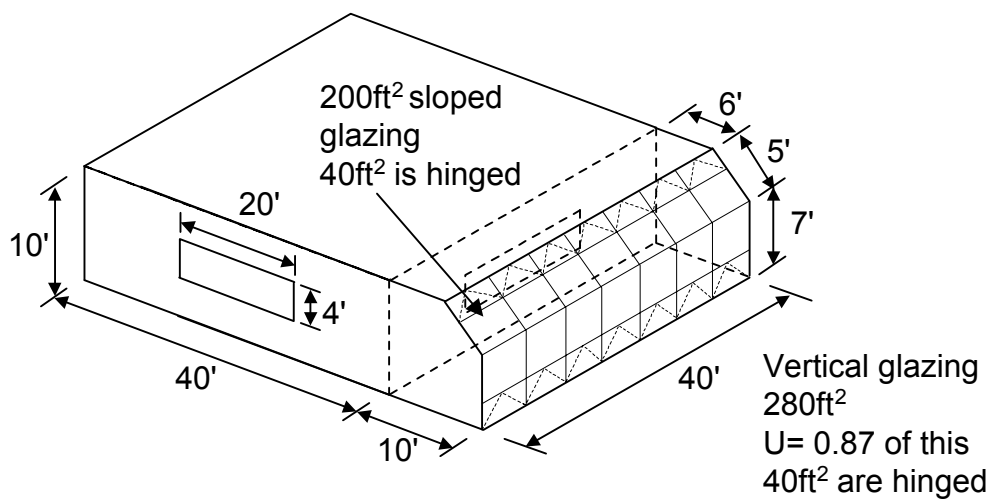

Figure R6-3 – Sunspace Prototype

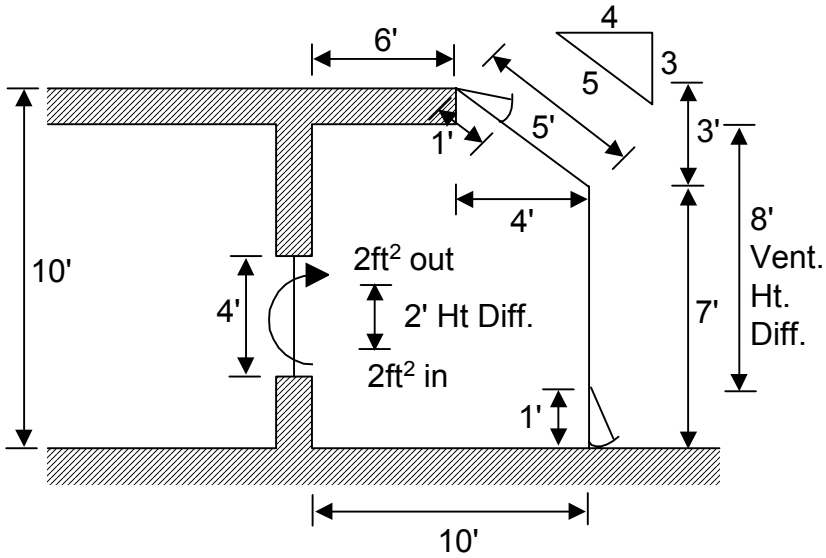

Figure R6-4 – Sunspace Section

The vendor must find the passing solution and failing solution in climates 3, 9, 12, 14, and 16 by varying the heating equipment AFUE. The CEC reference method shall pass the passing solution and fail the failing solution.

The vendor shall also demonstrate that the ACM correctly defines the standard design building and calculates the space conditioning custom budget. The vendor shall create and run a standard design equivalent building for climate zone 12. The standard design equivalent proposed design TDV energy must equal the standard design equivalent standard design TDV energy. These values shall also equal the standard design TDV energy for this test.

6.2.7 Exterior Mass Walls

Measure Description

Exterior mass walls are walls that are built with a heavy material that absorbs heat as the sun strikes it and releases the heat into the conditioned space after a period of time. Thermal mass has the effect of both dampening and delaying heat transfer.

Algorithms and Modeling Assumptions

The ACM must have the capability to model heat storage in exterior walls. The ACM must accept inputs on the thermal storage capacity of walls. For the CEC reference method, this input is heat capacity (HC) which is entered as Btu/ºF-ft². However, ACMs may take the input in other ways acceptable to the CEC.

Test Description

The test for exterior mass walls is made using prototype A in five climate zones: 3, 9, 12, 14, and 16. All of the exterior walls of the building are assumed to be of mass construction: The mass is assumed to be 12 inches thick with a volumetric heat capacity of 10 Btu/F-ft³ and a conductivity of 1.064. The outside surface of the mass wall is modeled with a U-value of 2.63 (R = 0.38) to approximate the effect of an air film. Insulation is assumed to be on the inside surface of the wall. The ACM vendor shall find the passing solution and the failing solution by varying the R-value of the interior insulation. The CEC reference method must pass the passing solution and fail the failing solution.

The ACM vendor shall also demonstrate that the ACM correctly defines the standard design building and calculates the custom budget. The ACM vendor shall create and run a standard design equivalent building for climate zone 12. For the standard design equivalent building, the TDV energy for both the standard design and proposed design cases must be equal. They must also equal the TDV energy for the standard design case in this test.

6.2.8 Gas ~~Fired~~ Cooling

Measure Description

Gas ~~Fired~~ cooling provides an opportunity to reduce peak electric demand. ~~Two types of systems are available for residential applications: engine driven and absorption. With gas engine driven cooling the electric motor that would normally power the compressor is replaced by a gas reciprocating engine.~~ With gas absorption, a chemical process is used to provide cooling.

As a minimum capability, ACMs must be able to accept a COP input, and report the use of gas ~~fired~~ cooling in the *Special Features and Modeling Assumptions* section of the reports. The ACM user shall ~~must~~ also attach manufacturer's equipment specifications showing the COP95, CAP95 and PPC of the equipment ~~supporting calculations or worksheets of Commission approved methods~~.

Algorithms and Modeling Assumptions

Test Description

To determine the accuracy of modeling cooling ~~fired heat pumps~~ the ACM vendor shall perform the test listed in Table R6-1. ~~One test is for engine driven gas cooling and the other for absorption. In both cases, t~~The passing and failing solutions are determined by varying the fenestration U-factor.

6.3 Solar Thermal Water Heating

6.3.1 Overview

This section describes the acceptable methods for calculating the solar savings multiplier (SSM). Two methods are provided here and ACMs can become certified for one or both.

- The first method has limited scope. It may only be used for water heating systems serving individual dwelling units. In addition the solar system has to be rated by the Solar Rating and Certification Corporation (SRCC) with the OG 300 method.
- The second method is more general in scope and may be used for any active solar water heating systems in single family or multi-family buildings.

Energy benefits of solar water heating systems shall be calculated using the procedures described in ACM RG-2005. When a credit is taken for nondepletable energy, the ACM standard input reports must flag this and include a statement in the *Special Features and Modeling Assumptions* section of the reports. The ACM user must also attach SRCC documentation for the system or collectors used and either ~~supporting calculations or~~ Commission approved worksheets if the OG 300 method is used or an F-Chart computer run printout if the second method is used~~methods~~.

6.3.2 Integration in ACMs

Solar water heating calculation procedures may be integrated in residential ACMs or they may be stand-alone calculation procedures. The descriptions, algorithms, and test procedures described in this section apply to either case. Contact the CEC for information on how to obtain approval of a stand-alone solar water heating calculation procedure.

6.3.3 Water Heating Systems for Individual Dwellings Rated with the OG 300 Procedure

Measure Description

Residential solar systems can include many types of systems. The simplest system is the integrated collector storage (ICS) system which is basically a dark colored tank mounted behind glazing. Thermosyphon systems have a storage tank mounted above the collectors so that the fluid (usually water) can circulate naturally as it is heated in the collectors. Forced circulation systems use a pump to circulate a fluid from the storage tank to the collector. For forced circulation systems, the collectors may be located remotely from the storage tank.

All of these residential scale solar systems are rated by the Solar Rating and Certification Corporation (SRCC). The SRCC OG 300 procedure tests a complete system put together by the manufacturer, including the collectors, the pumps, controls, storage tanks and backup system (SRCC refers to the backup system as the auxiliary system). The OG 300 procedure uses the TRNSYS computer program to calculate the rating for the system as a whole and produces a Solar Energy Factor (SEF). The SEF is a unitless term and is meant to be compared to the energy factor (EF) published for conventional water heaters. Since the rated system includes the backup water heater, the SEF depends on whether the system was rated with electric or gas backup. It also accounts for the efficiency of the backup system. The SRCC publishes data on all systems and collectors hat have been rated.

*Error! Reference source not found.**Algorithms and Modeling Assumptions***

Modeling assumptions and algorithms are documented in ACM RG-2005.

Eligibility Criteria

In order to use the OG-300 method, the system must satisfy the following eligibility criteria:

- The collectors must face within 35 degrees of south and be tilted at a slope of at least 3:12.
- The system must be installed in the exact configuration for which it was rated, e.g. the system must have the same collectors, pumps, controls, storage tank and backup water heater fuel type as the rated condition.
- The system must be installed according to manufacturer's instructions .
- The collectors shall be located in a position that is not shaded by adjacent buildings or trees between 9:00 AM and 3:00 PM (solar time) on December 21.

Test Description

To determine the accuracy of modeling solar systems using the OG 300 method the ACM vendor shall perform the test listed in table R6-4. The ACM vendor modifies the gas water heating base case and reports the solar savings fraction (SSF) for both the proposed design and the standard design. The CEC reference method shall predict a SSF energy within 5% of the candidate ACM.

Table R6-4 – OG-300 Solar Systems Tests

Type	Test	Prototypes	Climates	Optional Capability (Discrete Modification(s))
SS	1	A	3, 9, 12, 14, 16	**Solar System with Electric Backup.** Add a solar system with electric backup that has a SEF of 2.0.
SS	2	A	3, 9, 12, 14, 16	**Solar System with Gas Backup.** Add a solar system with gas backup that has a SEF of 1.0

6.3.4 Water heating Systems for Individual Dwellings or Multi-Family Buildings Based on Collector Tested Using the OG-100 Procedure

Measure Description

The solar thermal systems described in this section have general applicability for water heating applications. They may be used for multi-family or single family water heating systems. Any solar water heating system that uses forced circulation, and collectors rated under the SRCC OG-100 method can use this approach. Situations where this approach might be used are: a single family residences with large hot water demand, solar water heating systems for multi-family buildings, and where a single family system cannot meet the eligibility criteria for OG 300 rated systems.Minimum Reports

A report shall be created that includes the parameters listed in Table R6-5 and Table R6-6.

Prototype

For this series of tests thermal loads and water heating budget shall be based on water heating prototype E (see chapter 5).

Table R6-5 – Prototype Solar System

Parameter	Value
Collector Slope	4:12
Collector Azimuth	180 ° (due south)
Collector Area	Four collectors as described below.
Collector Performance (OG 100)	SRCC Certification Number 100-1998-0018 Yint = 0.530, Slope = -0.250 Btu/h-ft²-°F, A = 32.9 ft²
Storage Tank Size	500 gallons
Pumping	¼ hp pump between collectors and storage tank
Freeze Control	Drain-down
Add more as needed	<Rob>

Algorithms and Modeling Assumptions

The CEC reference method is based on the F-Chart procedure, which is available from multiple sources. Modeling inputs and limits for the F-Chart reference method are defined in ACM RG-2005.

Test Description

To determine the accuracy of modeling solar systems using the SRCC OG100 method, the vendor of the integrated ACM or stand-alone solar application shall perform the test listed in Table R6-6. The integrated ACM or stand-alone solar application shall predict a solar savings fraction (SSF) for the cases in Table R6-6 within plus or minus 3% of the SSF predicted by the CEC reference method.

Table R6-6 – OG 100 Solar System Tests

Type	*Test*	*Prototypes*	*Climates*	*Optional Capability (Discrete Modification(s))*
SS	3	ºF	All	**Basecase.** The basecase solar system with the schedule of loads shall be simulated in all climate zones.
SS	4	ºF	3, 9, 12, 14, 16	**Collector Orientation.** Vary the orientation of the collectors from due south (the basecase) to 45 degrees east of south.
SS	5	ºF	3, 9, 12, 14, 16	**Collector Slope.** Change the collector slope from the 4:12 pitch in the basecase to 12:12.
SS	6	ºF	3, 9, 12, 14, 16	**Collector Performance. Substitute the following collector.** SRCC Certification Number 100-1981-0085A Yint = 0.737, Slope = -0.805 Btu/h-ft²-ºF, A = 32.3 ft²
SS	7	ºF	3, 9, 12, 14, 16	**Collector Area.** Double the number of collectors
SS	8	ºF	3, 9, 12, 14, 16	**Storage Tank Size.** Reduce the storage tank size To 200 gallons.
SS	10	ºF	3, 9, 12, 14, 16	**Circulation Pump.** Increase the size of the circulation pump from ¼ hp to ½ hp.
SS	11	ºF	3, 9, 12, 14, 16	**Freeze Control.** Change the freeze control from drain-down to glycol.

~~6. Optional Capabilities Tests ..... 6-1~~
~~6.1 Controlled Ventilation Crawl Spaces (CVC) ..... 6-1~~
~~6.2 Zonal Control ..... 6-3~~
~~6.2.1 Prototype Zones ..... 6-3~~
~~6.2.2 Thermostats ..... 6-3~~
~~6.2.3 Internal Gains ..... 6-4~~
~~6.2.4 Tests ..... 6-5~~
~~6.3 Sunspaces ..... 6-6~~
~~6.4 Side Fin Shading ..... 6-7~~
~~6.5 Exterior Mass Walls ..... 6-8~~
~~6.6 Optional Water Heating Capabilities Tests ..... 6-10~~
~~6.6.1 Solar and Wood Stove Boiler Water Heating ..... 6-10~~
~~6.6.2 Combined Hydronic Space/Water Heating ..... 6-10~~
~~6.6.3 Dedicated Hydronic Systems ..... 6-15~~
~~6.7 Building Additions ..... 6-16~~
~~6.7.1 Addition Alone ..... 6-16~~
~~6.7.2 Addition Plus Existing ..... 6-16~~
~~6.8 Solar Water Heating and Space Heating ..... 6-17~~
~~6.9 Form 3 Report Generator ..... 6-17~~
~~6.10 Exceptional Methods Which May Be Approved In The Future ..... 6-17~~

~~Optional Capabilities Tests~~

~~This section of the Manual explains the tests that must be performed in order for residential ACMs to be approved for optional capabilities. Most of the tests are performed relative to one of the prototype buildings identified in the previous section. Each computer run used to test the minimum space conditioning capabilities is given a precise designation to make it easier to keep track of the runs and to facilitate analysis. Optional capabilities tests begin with the test number "51". The following scheme is used:~~

~~12 E 51~~

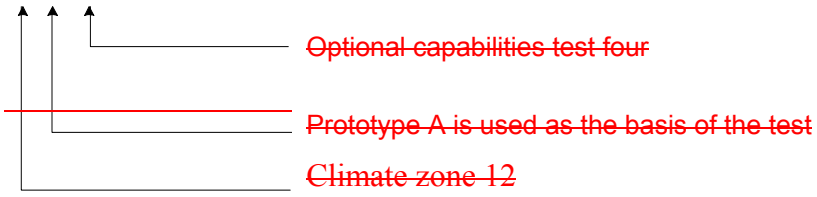

~~6.1Controlled Ventilation Crawl Spaces (CVC)~~

~~Controlled ventilation crawl spaces is an optional capability based on the ability of an ACM to model more than one thermal zone. The crawl space of the building is modeled as a separate, unconditioned thermal zone. Details of the test model are provided in Appendix C, test file 12B51. Some key features are summarized below.~~

~~The CVC zone has an exterior perimeter length and floor area (i.e., the ground area) equal to the prototype building B perimeter and floor area. Crawlspace volume is 3467 ft^3. CVC infiltration is modeled using the air changes per hour method and uses 0.22 air changes per hour.~~

~~The floor separating the crawl space from conditioned space becomes an interzone boundary. 400 ft2 of this floor has a U-value of 0.342, representing an uninsulated, uncarpeted floor, and the remainder has a U-value of 0.199, representing an uninsulated, carpeted floor.~~

~~Insulation is placed in the perimeter walls of the crawl space, and the crawl space vents are modeled with automatic seasonally operated louvers to minimize ambient conditions within the crawl space. When the building is in a heating mode, the vents are closed (inlet and outlet are zero). When the building is in a cooling mode, the vents are open and the total vent area is 1/150 of the crawlspace floor area or 10.67 ft2. Half of this is inlet and half outlet. The ventilation height difference is zero. Only wind effects apply. Wind speed is reduced to 25% of that on the weather tape to account for ground level conditions. Heat capacity in the crawlspace is 1.4 Btu/F-ft2.~~

~~When insulation is placed in the perimeter walls of the crawl space in lieu of the floor assembly, other requirements are triggered for builders. The definition of "controlled ventilation crawlspace", in the glossary of the *Residential Manual*, should be consulted for more details.~~

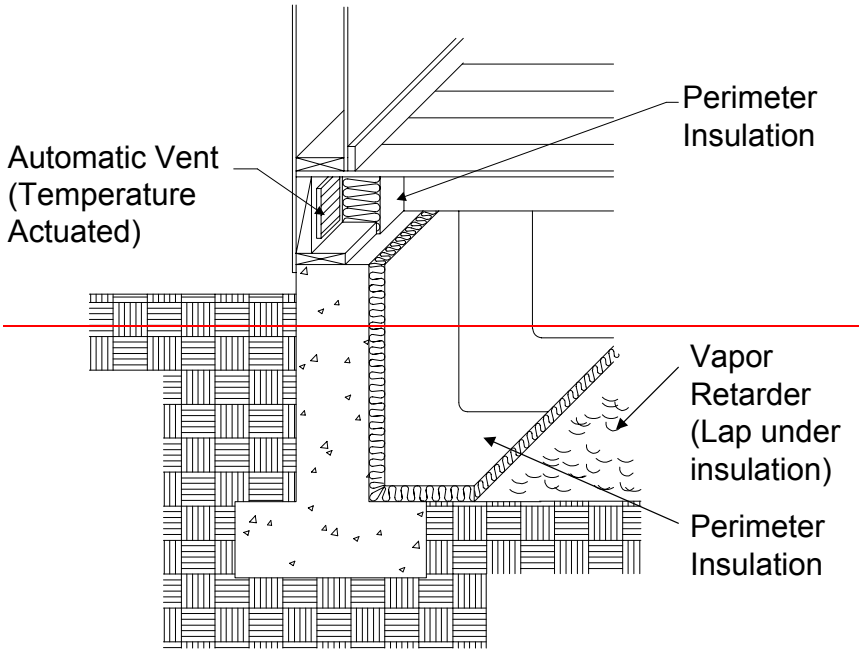

~~Figure 6-1 - Section at Crawlspace Perimeter~~

~~CVC is tested only for prototype building B in five climate zones: 3, 9, 12, 14 and 16. CVC is added and the heating efficiency is modified accordingly. Each computer run must result in greater energy use than the prototype B basecase building. The computer runs are summarized below. *Total of five runs.*~~

~~**Table 6-1 - Controlled Ventilation Crawlspace Test Inputs**~~

~~Run Label~~	~~CVC~~	~~Heating AFUE~~
~~03B51~~	~~yes~~	~~0.63~~
~~09B51~~	~~yes~~	~~0.43~~
~~12B51~~	~~yes~~	~~0.64~~
~~14B51~~	~~yes~~	~~0.69~~
~~16B51~~	~~yes~~	~~0.74~~

~~The optional capability test also requires that the vendor demonstrate that the ACM correctly defines the standard design building and calculates the custom budget. This test involves running the standard design equivalent building for climate zone 12 and showing that the custom budget figures from computer run "12B51" are equal. The standard design equivalent building is included in Appendix C and labeled "12B51C".~~

~~6.2Zonal Control~~

~~Zonal control is one of the optional capabilities based on the ability of an ACM to model more than one thermal zone at the same time. With zonal control, the sleeping and living areas are modeled separately, each with its own separate thermostat schedule and internal gain assumptions. The specifications for the building with zonal control are detailed in CALRES input test file 12A52 available from the Commission on diskette. Further discussion is provided in the Residential Manual, in Section 8.9, and in the glossary under "zonal control". Key features are discussed below.~~

~~6.2.1Prototype Zones~~

~~Figure 6-2 depicts the prototype building separated into living and sleeping zones. The boundary between the zones consists of a wall with U-value of 0.29 and net area of 360 square feet. The wall contains an uncloseable opening of 40 square feet, modeled with a U-value of 20.0.~~

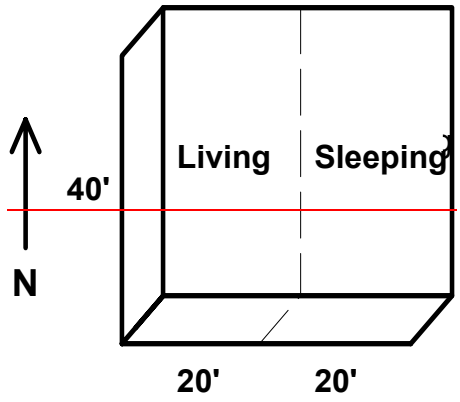

~~Figure 6-2 - Zoning the Prototype Building~~

~~6.2.2Thermostats~~

~~The thermostat schedule for the living area is the same as the standard assumptions except that the cooling setpoint is 83°F between 11:00 pm and 7:00 am.~~

~~The thermostat schedule for the sleeping area has two heating setback periods: between 11:00 pm and 7:00 am and between 8:00 am and 9:00 pm. The cooling thermostat has one setup period to 83°F, between 8:00 am and 9:00 pm. The thermostat schedules for zonal control are shown in Table 6-1 below.~~

~~Table 6-2 - Zonal Control Thermostat Set Points~~

~~Hour~~	~~Heating~~	~~Cooling~~	~~Hour~~	~~Heating~~	~~Cooling~~	~~Hour~~	~~Heating~~	~~Cooling~~
~~Living Areas~~								
~~1~~	~~60~~	~~83~~	~~9~~	~~68~~	~~78~~	~~17~~	~~68~~	~~78~~
~~2~~	~~60~~	~~83~~	~~10~~	~~68~~	~~78~~	~~18~~	~~68~~	~~78~~
~~3~~	~~60~~	~~83~~	~~11~~	~~68~~	~~78~~	~~19~~	~~68~~	~~78~~
~~4~~	~~60~~	~~83~~	~~12~~	~~68~~	~~78~~	~~20~~	~~68~~	~~78~~
~~5~~	~~60~~	~~83~~	~~13~~	~~68~~	~~78~~	~~21~~	~~68~~	~~78~~
~~6~~	~~60~~	~~83~~	~~14~~	~~68~~	~~78~~	~~22~~	~~68~~	~~78~~
~~7~~	~~60~~	~~83~~	~~15~~	~~68~~	~~78~~	~~23~~	~~68~~	~~78~~
~~8~~	~~68~~	~~78~~	~~16~~	~~68~~	~~78~~	~~24~~	~~60~~	~~83~~
~~Sleeping Areas~~								
~~1~~	~~60~~	~~78~~	~~9~~	~~60~~	~~83~~	~~17~~	~~60~~	~~83~~
~~2~~	~~60~~	~~78~~	~~10~~	~~60~~	~~83~~	~~18~~	~~60~~	~~83~~
~~3~~	~~60~~	~~78~~	~~11~~	~~60~~	~~83~~	~~19~~	~~60~~	~~83~~
~~4~~	~~60~~	~~78~~	~~12~~	~~60~~	~~83~~	~~20~~	~~60~~	~~83~~
~~5~~	~~60~~	~~78~~	~~13~~	~~60~~	~~83~~	~~21~~	~~60~~	~~83~~
~~6~~	~~60~~	~~78~~	~~14~~	~~60~~	~~83~~	~~22~~	~~68~~	~~78~~
~~7~~	~~60~~	~~78~~	~~15~~	~~60~~	~~83~~	~~23~~	~~68~~	~~78~~
~~8~~	~~68~~	~~83~~	~~16~~	~~60~~	~~83~~	~~24~~	~~60~~	~~78~~

~~6.2.3Internal Gains~~

~~Total internal gains are split between the living areas and the sleeping areas as indicated in the following equations.~~

~~Equation 6-1~~

$$\text{Int-Gain}_{living} = (20{,}000) + (15 \times CFA_{living})$$

~~Equation 6-2~~

$$\text{Int-Gain}_{sleeping} = 15 \times CFA_{sleeping}$$

~~An alternate set of internal gain schedules are used: one for the living areas of the house and one for the sleeping areas. These alternate schedules are shown in Table 6-3.~~

~~Table 6-3 - Internal Gain Schedules for Zonal Control~~

~~Hour~~	~~Percent~~	~~Hour~~	~~Percent~~	~~Hour~~	~~Percent~~
~~Living Areas~~					
~~1~~	~~1.61~~	~~9~~	~~6.33~~	~~17~~	~~6.19~~
~~2~~	~~1.48~~	~~10~~	~~6.86~~	~~18~~	~~7.18~~
~~3~~	~~1.14~~	~~11~~	~~6.38~~	~~19~~	~~7.24~~
~~4~~	~~1.13~~	~~12~~	~~5.00~~	~~20~~	~~5.96~~
~~5~~	~~1.21~~	~~13~~	~~4.84~~	~~21~~	~~5.49~~
~~6~~	~~1.46~~	~~14~~	~~3.15~~	~~22~~	~~6.20~~
~~7~~	~~2.77~~	~~15~~	~~2.94~~	~~23~~	~~4.38~~
~~8~~	~~5.30~~	~~16~~	~~3.41~~	~~24~~	~~2.35~~
~~Sleeping Areas~~					
~~1~~	~~4.38~~	~~9~~	~~3.76~~	~~17~~	~~4.47~~
~~2~~	~~4.02~~	~~10~~	~~3.85~~	~~18~~	~~4.45~~
~~3~~	~~4.50~~	~~11~~	~~4.70~~	~~19~~	~~4.29~~
~~4~~	~~4.50~~	~~12~~	~~3.61~~	~~20~~	~~3.30~~
~~5~~	~~4.32~~	~~13~~	~~3.65~~	~~21~~	~~3.75~~
~~6~~	~~5.46~~	~~14~~	~~2.63~~	~~22~~	~~3.75~~
~~7~~	~~6.39~~	~~15~~	~~2.46~~	~~23~~	~~4.45~~
~~8~~	~~7.40~~	~~16~~	~~2.32~~	~~24~~	~~3.59~~

~~6.2.4Tests~~

~~The zonal control feature is tested only for prototype A in five climate zones: 3, 9, 12, 14 and 16. Zonal control is added and the heating efficiency is modified accordingly. Each computer run must result in greater energy use than prototype A. The computer runs are summarized in Table 6-4 below. *Total of five runs.*~~

~~Table 6-4 - Zonal Control Test Inputs~~

~~Run Label~~	~~Zonal Control~~	~~Heating AFUE~~
~~03A52~~	~~yes~~	~~0.74~~
~~09A52~~	~~yes~~	~~0.55~~
~~12A52~~	~~yes~~	~~0.68~~
~~14A52~~	~~yes~~	~~0.68~~
~~16A52~~	~~yes~~	~~0.73~~

~~The optional capability test also requires that the vendor demonstrate that the ACM correctly defines the standard design building and calculates the custom budget. This test involves running the standard design equivalent building for climate zone 12 and showing that the custom budget figures from computer run "12A52" are equal. The standard design equivalent building is included in Appendix C and labeled "12A52C".~~

~~*6.3Sunspaces*~~

~~Sunspace modeling is one of the optional capabilities based on the ability of an ACM to model more than one thermal zone at the same time. The sunspace of the building is modeled as a separate, unconditioned thermal~~

~~zone. The specifications for the test building are detailed in the CALRES input test file 12A53 available from the Commission on diskette, and key features are highlighted below.~~

~~An unconditioned sunspace is added to the south side of Prototype A as illustrated in Figure 6-3 and Figure 6-4. The wall and window separating the sunspace and the house remains the same as in the base case, but the surfaces and vent openings of this wall are changed from exterior types to interzone types. The interzone vent is controlled to open only when temperature (T) conditions are $T_{house} < T_{desired}$ and $T_{sunspace} > T_{house}$ (in heating mode).~~

~~The performance characteristics of sunspace envelope components are the same as for the basecase prototype, except slab F2-value is 0.90; fenestration shading coefficient is 0.90, no internal shading device is assumed. Total vent area is assumed to be 40 ft2 with an eight foot height difference~~

~~In the sunspace zone, assumptions for infiltration, heat capacity, solar gain targeting, and zone thermostat temperature settings vary from the conditioned zone. Sunspace zone infiltration is modeled using the air changes per hour method and the same infiltration factors as used in the 1988 ACM manual, 0.50 air changes per hour. There are no restrictions on targeting solar gains that enter unconditioned spaces such as sunspaces.~~

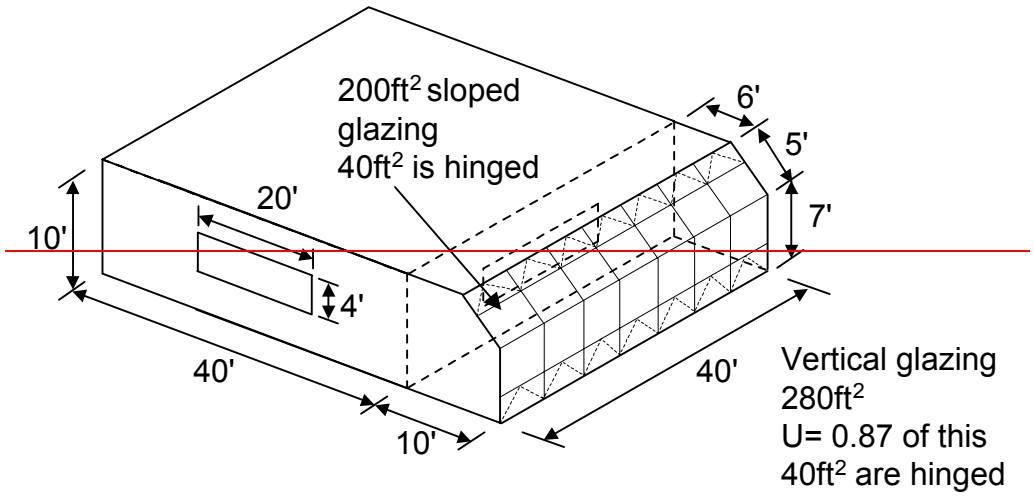

~~Figure 6-3 – Sunspace Prototype~~

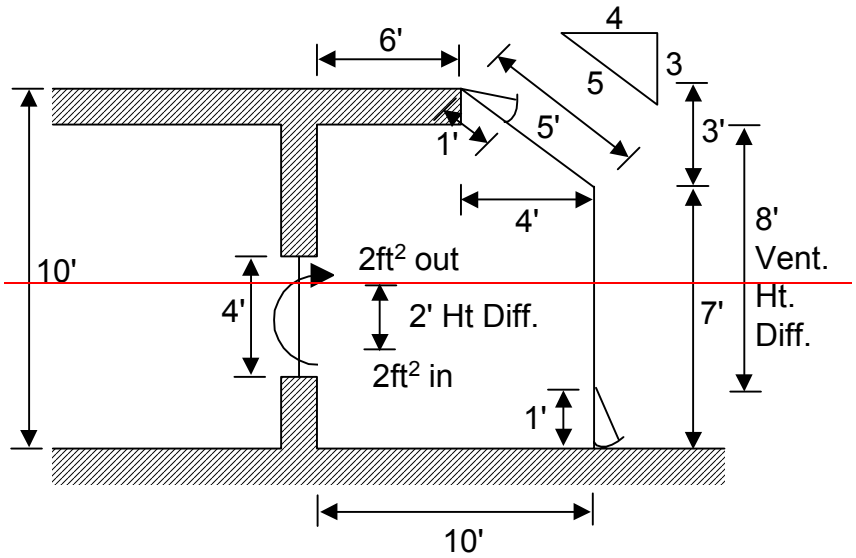

~~Figure 6-4 - Sunspace Section~~

~~Sunspaces are tested only for prototype A in five climate zones: 3, 9, 12, 14 and 16. A sunspace is added and the heating efficiency is modified accordingly. Each computer run must result in greater energy use than prototype A. The computer runs are summarized below. *Total of five runs.*~~

~~Table 6-5 – Sunspace Test Inputs~~

~~Run Label~~	~~Sunspace~~	~~Heating AFUE~~
~~03A53~~	~~Yes~~	~~0.55~~
~~09A53~~	~~Yes~~	~~0.29~~
~~12A53~~	~~Yes~~	~~0.54~~
~~14A53~~	~~Yes~~	~~0.54~~
~~16A53~~	~~Yes~~	~~0.64~~

~~The optional capability test also requires that the vendor demonstrate that the ACM correctly defines the standard design building and calculates the custom budget. This test involves running the standard design equivalent building for climate zone 12 and showing that the custom budget figures from computer run "12A53" are equal.~~

~~*6.4Side Fin Shading*~~

~~Testing for side fins is performed relative to a modification of prototype A; the base building is rotated 30 degrees to the west. The test is performed in five climate zones: 3, 9, 12, 14 and 16. The specifications for the side fins are provided on the Commission's CALRES input file diskette as , test file 12A54. Key features are covered below.~~

~~The side fins extend 40 feet from the surface of a window that is assumed to be 10 feet wide. The fins are 5 feet from the edge of the window. The top of the side fins are 20 feet above the top of the window. Side~~

~~fins are separately added to the east and west sides of the building and the heating efficiency is modified accordingly. Each computer run must result in greater energy use than prototype A. *Total of five runs.*~~

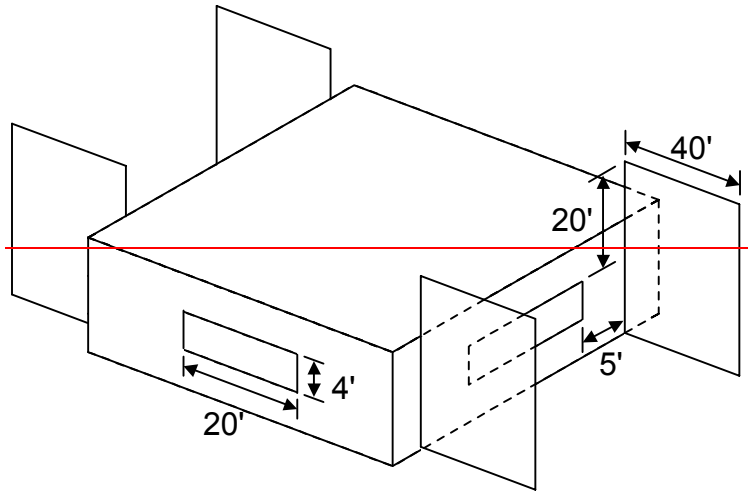

~~**Figure 6-5 - Side Fins for Optional Capabilities Test**~~

~~**Table 6-6 - Side Fin Test Inputs**~~

~~Run Label~~	~~Side Fins~~	~~Heating AFUE~~
~~03A54~~	~~Yes~~	~~0.65~~
~~09A54~~	~~Yes~~	~~0.40~~
~~12A54~~	~~Yes~~	~~0.62~~
~~14A54~~	~~Yes~~	~~0.65~~
~~16A54~~	~~Yes~~	~~0.70~~

~~The optional capability test also requires that the vendor demonstrate that the ACM correctly defines the standard design building and calculates the custom budget. This test involves running the standard design equivalent building for climate zone 12 and showing that the custom budget figures from computer run "12A54" are equal. The standard design equivalent building is included on the CALRES diskette as the input file labeled "12A54C".~~

~~*6.5Exterior Mass Walls*~~

~~The test for exterior mass walls is made relative to prototype A in five climate zones: 3, 9, 12, 14 and 16. All of the exterior walls of the building are assumed to be of mass construction: The mass is assumed to be 12 inches thick with a volumetric heat capacity of 10 Btu/F-cf and a conductivity of 1.064. The outside surface of the mass wall is modeled with a U-value of 2.63 (R = 0.38) to approximate the effect of an air film. Insulation is assumed to be on the inside surface of the wall. This insulation is varied for each climate zone. Each computer run must result in greater energy use than prototype E. *Total of five runs.*~~

~~**Table 6-7 – Exterior Mass Wall Inputs**~~

~~Run Label~~	~~Exterior Mass Walls~~	~~Interior R-value~~
~~03A55~~	~~yes~~	~~4.20~~
~~09A55~~	~~yes~~	~~1.20~~
~~12A55~~	~~yes~~	~~3.575~~
~~14A55~~	~~yes~~	~~4.825~~
~~16A55~~	~~yes~~	~~6.95~~

~~The optional capability test also requires that the vendor demonstrate that the ACM correctly defines the standard design building and calculates the custom budget. This test involves running the standard design equivalent building for climate zone 12 and showing that the custom budget figures from computer run "12A55" are equal. The standard design equivalent building is included as the input file labeled "12A55C" on the CALRES input file diskette.~~

~~6.6Optional Water Heating Capabilities Tests~~

~~6.6.1Solar and Wood Stove Boiler Water Heating~~

~~Optional water heating capabilities include solar water heating and wood stove boiler-assisted water heating. Energy credit may be taken for the use of these technologies through the use of multipliers that adjust the water heating loads. For solar this adjustment is the Solar Savings Fraction (SSFj) derived from an f-Chart analysis and for wood stove boilers this adjustment is called the Wood Stove Adjustment Factor (WSAFj). These adjustments are used as shown in Section 4.21~~

~~6.6.2Combined Hydronic Space/Water Heating~~

~~Combined hydronic space/water heating is a system whereby a water heater is used to provide both space heating and water heating. Hydronic systems or water heaters dedicated solely to space heating are covered in Section 6.6.3.~~

~~For combined hydronic systems, an effective AFUE, or for electric water heaters or heat pumps, an effective HSPF, is calculated and used in the space heating energy calculations. When a fan coil is used to distribute heat, the fan energy and the heat contribution of the fan motor must be considered. This shall automatically be added when the distribution type is "ducts". The effective AFUE or HSPF is calculated according to the following equations for each water heater type.~~

~~6.6.2.1Storage Gas Water Heater~~

~~When storage gas water heaters are used in combined hydronic applications and there is no air distribution fan, then the effective AFUE is given by the following equation.~~

~~Equation 6-3~~

$$\cancel{AFUE_{eff} = RE - \frac{PL}{RI}}$$

~~Where~~

~~$AFUE_{eff}$ = The effective AFUE of the gas water heater in satisfying the space heating load.~~

~~RE = The recovery efficiency of the gas water heater. A default value of 0.76 may be assumed if the recovery efficiency is unknown.~~

~~PL = Pipe losses (kBtu/h). This can be assumed to be zero when less than 10 feet of the piping between the water heater storage tank and the fan coil or other heating elements is located in unconditioned space.~~

~~Equation 6-4~~

$$\cancel{PL = \sum_{i=1}^{n} \frac{FT_i \times PLR_i}{8760}}$$

~~RI = The rated input of the gas water heater (kBtu/h).~~

~~When there is an air distribution fan, then the energy used by the fan and the heat contributed by the fan is considered in the same manner as it is for a furnace (see Section 4.18)~~

~~***6.6.2.2Storage Electric Water Heater***~~

~~The HSPF of storage water heaters used for space heating in a combined hydronic system is given by the following equations. If the system has a fan coil, the $HSPF_{eff}$ is used. $HSPF_{w/o_fan}$ is used if there is no fan coil.~~

~~**Equation 6-5**~~

$$HSPF_{eff} = \frac{1+.005(3.413)}{\left[\frac{1}{HSPF_{w/o_fan}}\right]+.005}$$

~~**Equation 6-6**~~

$$HSPF_{w/o_Fan} = 3.413\left[\frac{1-\frac{PL}{3.413kWi}}{1+\frac{W_{PUMP}}{1000kWiI}}\right]$$

~~Where:~~

~~$HSPF_{eff}$ = The effective HSPF of the electric water heater in satisfying the space heating load.~~

~~W_{pump} = The watts of the pump which circulates water between an electric storage water heater and the fan coil~~

~~PL = Pipe losses (kBtu/h). This can be assumed to be zero when less than 10 feet of the piping between the water heater storage tank and the fan coil or other heating elements is located in unconditioned space.~~

~~kWI = The kilowatts of input to the water heater.~~

~~6.6.2.3Heat Pump Water Heater~~

~~The HSPF of heat pump water heaters used for space heating in a combined hydronic system is given by the following equations. If the system has a fan coil, the $HSPF_{eff}$ is used. $HSPF_{w/o_fan}$ is used if there is no fan coil.~~

~~Equation 6-7~~

$$HSPF_{eff} = \frac{1+.005(3.413)}{\left[\frac{1}{HSPF_{w/o_fan}}\right]+.005}$$

~~Equation 6-8~~

$$HSPF_{w/o_Fan} = 3.413\left(\frac{RE_{hp}}{CZ_{adj}} - \frac{PL}{3.413kWi}\right)$$

~~Where:~~

~~$HSPF_{eff}$ = The effective HSPF of the heat pump water heater in satisfying the space heating load.~~

~~RE_{hp} = The recovery efficiency of the heat pump water heater. The following equation may be used as a default if the recovery efficiency is not known.~~

~~Equation 6-9~~

$$RE_{hp} = \frac{1}{\frac{1}{EF_{DOE}} - 0.1175}$$

~~CZ_{adj} = The climate zone adjustment (see water heating calculation method) (see Table 4-9).~~

~~PL = Pipe losses (kBtu/h). This can be assumed to be zero when less than 10 feet of the piping between the water heater storage tank and the fan coil or other heating elements is located in unconditioned space.~~

~~kWI = The kilowatts of input.~~

~~EF_{DOE} = The energy factor of the heat pump water heater when tested according to the DOE test procedure.~~

~~6.6.2.4Pipe Losses~~

~~Pipe losses must be considered when pipes between the water heater storage tank and the fan coil or other heating element are located in unconditioned space. To simplify compliance, pipe losses can be ignored when no more than ten feet of pipe (in plan view) is located in unconditioned space. Hourly loss rates are given by the following equation.~~

~~Equation 6-10~~

~~PL = Hourly pipe loss (kBtu/h).~~

~~PLR_i = The annual pipe loss rate per foot of length for the ith pipe (kBtu/y-ft).~~

~~FT_i = The length in feet of the ith pipe located within unconditioned space. Can be assumed to be zero if less than ten feet in plan view.~~

~~n = The number of unique pipe size or insulation conditions.~~

~~The annual pipe loss rate per foot of length (PLRi) is calculated from the following equation~~

$$PLR_i = 8.76 \left(\frac{T_s - T_a}{\frac{\ln\left(\frac{D_{io}}{D_{po}}\right)}{2\pi Ki} + \frac{1}{\pi\, ha\, D_{io}}} \right)$$

~~Where~~

~~8.76 = Conversion factor from Btu/hour to kBtu/year~~

~~T_s = Supply Temperature. This is assumed to be a constant 135 F.~~

~~T_a = Ambient Temperature. This is assumed to be 60.3 in all California climate zones.~~

~~D_{io} = Outside diameter of insulation. ft (actual not nominal).~~

~~D_{po} = Outside diameter of pipe, ft (actual not nominal).~~

~~Ki = Insulation conductivity, constant 0.023 Btu/h-ft-F~~

~~ha = Air film coefficient, constant 1.65 Btu/h-ft^2-F~~

~~Pipe loss rates (PLR) values for typical conditions are shown in the table below~~

~~**Table 6-8- Annual Pipe Loss Rates (kBtu/y-ft)**~~

		~~Insulation Thickness~~		
~~Nominal Pipe Size~~	~~None~~	~~1/2 inch~~	~~3/4 inch~~	~~1 inch~~
~~1/2 inch~~		~~71.6~~	~~60.9~~	~~54.2~~
~~3/4 inch~~		~~91.1~~	~~75.8~~	~~66.6~~
~~1 inch~~		~~109.9~~	~~90.1~~	~~78.1~~
~~1 - 1/2 inch~~		~~146.7~~	~~117.5~~	~~100.3~~
~~2 inch~~		~~182.9~~	~~144.3~~	~~121.7~~

~~*6.6.2.5Tests*~~

~~Prototype A is used for this test, but combined hydronic systems are substituted for the gas furnace in the basecase. Three types of combined hydronic systems are tested -- labeled K, L and M.~~

~~K - A 75 gallon storage gas water heater is used for both space conditioning and water heating. Hot water base boards are used for heat distribution and insulated pipes are located in unconditioned space.~~

~~L - An electric water heater is used for both space conditioning and water heating and air is distributed through a fan coil system that delivers air to ducts located in an attic.~~

~~M - An electric heat pump is used for both space conditioning and water heating. Distribution is provided through hot water baseboards. All pipes are located within conditioned space.~~

~~The specifications for these three systems are shown in Table 6-9 below. The AFUEeff and HSPF w/o fan must match the values shown in the table.~~

Table 6-9 Combined Hydronic Test Results

		K	L	M
Water Heater Type		SG	SE	HP
Recovery Efficiency	unitless	0.7800	n.a.	n.a.
Rated Input	kBtu/sf	60.0000	n.a.	n.a.
Rated Input	kW	n.a.	5.0000	n.a.
Wpump	W	n.a.	60.0000	n.a.
EF	unitless	n.a.	n.a.	2.0000
Pipe Length	ft	100.0000	n.a.	n.a.

Run Label	AFUEeff	HSPF w/o fan	HSPF w/o fan
03A56	0.768	3.37	9.01
09A56	0.768	3.37	9.70
12A56	0.768	3.37	8.34
14A56	0.768	3.37	8.58
16A56	0.768	3.37	5.95

The optional capability test also requires that the vendor demonstrate that the ACM correctly defines the standard design building and calculates the custom budget. This test involves running the standard design equivalent building for climate zone 12 and showing that the custom budget figures from computer run "12A56" are equal. The standard design equivalent building is included in Appendix D and labeled "12A56C".

6.6.3Dedicated Hydronic Systems

Dedicated hydronic systems have boilers or other heating devices which produce hot water that is distributed through the building for heating. Such systems are permitted when the AFUE is known and can be entered. If the systems have pipes located in unconditioned space, then the AFUE must be adjusted for the pipe losses.

When water heaters are used in hydronic systems for space heating alone (a separate water heater for domestic service), the water heater functions as a boiler and is required by NAECA to have a minimum AFUE of 0.80. The AFUE of a water heater if tested as a boiler would be approximately equal to the average of the EF and the RE, and will generally not meet the minimum NAECA requirement. Water heaters proposed for use

~~in hydronic systems for space heating only must be tested as a boiler using the DOE AFUE and appropriate safety standard test procedures.~~

~~6.7Building Additions~~

~~The low-rise residential Building Energy Efficiency Standards permit two ways of analyzing building additions using the performance approach. The addition may be analyzed alone, in which case the internal loads are prorated on a floor area basis. Alternatively, the addition may be analyzed together with the existing house. This second method permits improvements to be made to the existing house, which may allow the building addition to have more glass or less insulation.~~

~~6.7.1Addition Alone~~

~~When the addition is analyzed alone, the internal loads are prorated on a floor area basis in both the standard design and the proposed design runs. The total internal gain is based on the fractional dwelling unit value, which is used as the "Number Dwelling Units" in Equation 4.3 (see Section 4.5). An addition alone may not be modeled as zonal control.~~

~~Equation 6-11~~

~~IntGainAdd = IntGainTotal x FractionalDwellingUnit~~

~~FractionalDwellingUnit = CFAadd ÷ (CFAadd + CFAexisting)~~

~~6.7.2Addition Plus Existing~~

~~When the building addition is analyzed together with the existing building, the procedure described in Chapter 6 of the *Residential Manual*, is followed.~~

~~It is necessary to manage information about the existing building and the addition in four categories as described below. These may be grouped in each table or separate C-2R forms may be generated for each category of information.~~

1. ~~Features of the existing building that will not be upgraded or changed.~~
2. ~~The current condition of existing building features that will be modified or upgraded.~~
3. ~~The improved condition of existing building features that are upgraded. The total surface areas in this category will usually be less than those in the second category because an existing wall is usually eliminated where the addition is attached to the existing building.~~
4. ~~Features of the proposed building addition.~~

~~6.8Solar Water Heating and Space Heating~~

~~Modeling of solar water heating and space heating systems is not an optional capability for residential ACMs, but ACMs must provide an input for the energy provided by solar or other nondepletable sources. These inputs are described in Chapter 4.~~

~~The Commission has approved the use of various versions of the f-Chart program for analyzing active solar systems. These programs may be used to estimate the energy credit to enter in the ACM. Guidelines for the use of f-Chart are included in Chapter 7 of the *Residential Manual*.~~

~~This Manual does not address approval of solar analysis programs. The application package for approval of solar water heating and space conditioning programs is included as Appendix G.~~

~~When a credit is taken for nondepletable energy, the ACM standard input reports must flag this and include a statement in the *Special Features and Modeling Assumptions* section of the reports. The ACM user must also attach supporting calculations or worksheets of Commission approved methods.~~

~~6.9Form 3 Report Generator~~

~~This test requires that ACMs correctly calculate the U-value of several construction assemblies. These construction assemblies are shown in Appendix E. The Form 3 generator must produce the values indicated in Table 6-10 for U-value. Construction assembly U-values must be calculated in a manner consistent with the manner and examples shown in the *Residential Manual*, in the glossary under "R-value" and "U-value", and in Appendix E.~~

~~**Table 6-10 - Form 3 Generator Results**~~

~~Construction Assembly Code~~	~~U-value~~
~~W.19.2x6.16~~	~~.065~~
~~R.38.2x4.24~~	~~.025~~
~~R.22.2x4.24~~	~~.041~~
~~RP.22.2x6.48~~	~~.044~~
~~FC.30.2x10.16~~	~~.028~~
~~FX.30.2x10.16~~	~~.034~~

~~6.10Exceptional Methods Which May Be Approved In The Future~~

~~The Commission may approve additional Exceptional Methods in the future, for instance, additional water heating credits. All approved ACMs must provide an input for space heating, space cooling and water heating systems to allow the user to enter a value for these possible credits. The ACM standard reports identify all non-zero values and place a statement in the *Special Features and Modeling Assumptions* section of the standard reports. The ACM user must include supporting calculations, worksheets or equipment specifications with the building permit application.~~

7. Home Energy Rating Systems (HERS) Required Field Verification And Diagnostic Testing

7.1. California Home Energy Rating Systems

Compliance credit for particular energy efficiency measures, which the Commission specifies, requires field verification and diagnostic testing of as-constructed dwelling units (as defined in Section 7.10) by a certified HERS (Home Energy Rating System) rater. The Commission approves HERS providers, subject to the Commission's HERS regulations, which ~~is required to regulate home energy rating system (HERS) providers in California. These regulations~~ appear in the California Code of Regulations, Title 20, Division 2, Chapter 4, Article 8, Sections 1670-1675. Approved HERS providers are authorized to certify HERS raters and maintain quality control over field verification and diagnostic testing ratings~~ratings~~. ~~Ratings are based on visual inspection and diagnostic testing of the physical characteristics and energy efficiency features of dwelling units, as constructed. When the term "dwelling unit" is used in reference to Home Energy Rating Systems (HERS) Required Verification and Diagnostic Testing applied to multifamily buildings, it shall mean each dwelling unit within each multifamily building project. When the term "building owner" is used in this Chapter, it shall mean owner of the dwelling unit.~~

When compliance documentation indicates field verification and diagnostic testing of specific energy efficiency measures as a condition for complying with Title 24, Part 6, an approved HERS provider and certified HERS rater shall be used to conduct the field verification and diagnostic testing. HERS providers and raters shall be considered special inspectors by building departments, and shall demonstrate competence, to the satisfaction of the building official, for the visual inspections and diagnostic testing. The HERS provider and rater shall be independent entities from the builder or subcontractor installer of the energy efficiency improvements being tested and verified, and shall have no financial interest in the installation of the improvements. Third Party Quality Control Programs approved by the Commission may serve the function of HERS raters for field verification purposes as specified in section 7.7.

The remainder of this chapter describes the:

- Measures that require field verification or testing (including references to test procedures or protocols that shall be followed by installers and HERS raters);
- Required documentation and communication steps;
- ~~Required early notification of the HERS provider;~~
- Requirements for certification by the installer that the installation complies;
- Required HERS rater verification procedures, and sampling procedures to be used if the builder chooses to do sampling;
- Requirements for Third Party Quality Control Programs that are authorized to serve the function of HERS raters;
- Requirements for sampling when field verification and diagnostic testing is required for additions and alterations; and
- Responsibilities of each of the parties involved in the field verification and diagnostic testing process.

7.2. Measures Required Field Verification and Diagnostic Testing ~~HERS Required Verification and Diagnostic Testing~~

~~HERS diagnostic testing and field verification is required for:~~

duct air sealing,

ACCA Manual D design and installation,

Refrigerant charge and airflow measurement, and

Building envelope sealing beyond improvements covered by default assumptions,

HERS field verification is required for:

thermostatic expansion valves,

duct surface area reductions, and

duct location improvements beyond those covered by default assumptions.

Table R7-1 describes the measures that require installer certification and HERS rater field verification and diagnostic testing, and identifies the protocol or test procedure in the appendices that shall be used for completing installer and HERS rater diagnostic testing and HERS rater field verification.

Table R7-1 – Summary of Measures Requiring Field Verification and Diagnostic Testing

Measure Title	Description	Protocol or Test Procedure
	Duct Measures	
Duct Sealing	Package D requires that space conditioning ducts be sealed. If sealed and tested ducts are claimed in the proposed design ACM calculation, diagnostic testing is required to verify that leakage is less than the specified criteria.	ACM RC-2005
Supply Duct Location, Surface Area and R-factor	If compliance credit is claimed for improved supply duct location, surface area and R-value, field verification is required to verify that duct system was installed according to the design, including location, size and length of ducts, duct insulation R-value and installation of buried ducts.[1]	ACM RC-2005
	Air Conditioner Measures	
Improved Refrigerant Charge	Package D requires in some climate zones that split system air conditioners and heat pumps be diagnostically tested in the field to verify that they have the correct refrigerant charge (see Section 4.7.3). The Proposed Design is modeled with less efficiency if diagnostic testing and field verification is not performed.	ACM RD-2005
Installation of Thermostatic I Expansion Valve (TXV)	A TXV may be installed as an alternative to refrigerant charge testing. The existence of a TXV has the same calculated benefit as refrigerant charge testing and requires field verification.	ACM RI-2005
Adequate Air Flow	Air conditioner efficiency requires adequate airflow across the evaporator coil. Compliance credit may be taken when airflow is higher than the criteria specified	ACM RE-2005
Air Handler Fan Watt Draw	If compliance credit is taken for reductions in fan power, the installed fan power shall be diagnostically tested and verified in the field.	ACM RE-2005
High Energy Efficiency Ratio (EER)	Compliance credit may be taken for increases in EER by installation of specific air conditioner or heat pump models, but only if the installation of that high EER model is field verified.	ACM RI-2005
Maximum Cooling Capacity	An additional compliance credit may be taken when the requirements for the combination of adequate air flow, duct sealing and Improved refrigerant charge are met and air conditioners are sized according to the ACM calculations. Field verification is required.	ACM RF-2005
	Building Envelope Measures	
Building Envelope Sealing	The default building envelope specific leakage area (SLA) is specified in Section 4.5.1. Compliance credit may be taken for improved building envelope sealing, but only if lower SLA values are field verified through diagnostic testing.	ASTM E779
High Quality Insulation Installation	ACMs recognize Standard and improved envelope construction. Compliance credit for improved envelope construction requires field verification.	ACM RH-2005

1. Note: Compliance credit for increased duct insulation R-value (not buried ducts) may be taken without field verification if the R-value is the same throughout the building, and for supply ducts located in crawlspaces and garages where all supply registers are either in the floor or within 2 feet of the floor. These two credits may be taken subject only to building department inspection.

2. Note: The requirement for verification of a high EER does not apply to equipment rated only with an EER.

All features that require verification and/or testing shall be listed in the *Field Verification And Diagnostic Testing* section of on the *Certificate of Compliance* (CF-1R). The listing shall include "eligibility and installation criteria" for such features. Field verified and diagnostically tested features shall be described in the *Compliance Supplement*. Installers shall certify that the requirements for compliance have been met on the *Installation Certificate* (CF-6R). Field Verification and diagnostic testing shall be performed by a HERS rater and documented on the *Certificate of Field Verification and Diagnostic Testing* (CF-6R).

~~These features shall be listed as *HERS Verification Required* features on the *Certificate of Compliance* (CF-1R) and the *Computer Method Summary* (C-2R). Such verification constitutes "eligibility and installation criteria" for these features. Field verified and diagnostically tested features must be described in the *Compliance Supplement*.~~

7.3. Summary of Documentation and Communication~~7.5Responsibilities and~~

The documentation and communication process for measures that require field verification and diagnostic testing is summarized below. The subsequent sections of this chapter contain additional information.

- The documentation author shall complete the compliance documents, including the CF-1R. A CF-1R shall be prepared for each dwelling unit. For multi-family buildings a single CF-1R is typically prepared for a whole building, but separate compliance documentation shall be required for dwelling units that have measures requiring field verification and diagnostic testing.
- The documentation author shall provide a signed Certificate of Compliance (CF-1R) to the builder, which indicates that any HERS diagnostic testing and field verification measure is required for compliance~~, the documentation author shall notify the HERS provider by phone, fax or email of the name of the builder, the street address or subdivision and lot number of the dwelling, and the measure(s) that require diagnostic testing and field verification. The documentation author shall certify on the CF-1R that this notification has been completed. The building department shall determine that this has taken place before accepting the CF-1R~~. The builder shall make arrangements for the services of a certified HERS rater prior to installation of the measures, so that once the installation is complete the HERS rater has ample time to complete the field verification and diagnostic testing without delaying final approval of occupancy by the building department.
- The builder or subcontractor installs the measure(s) that require field verification and diagnostic testing. The builder or installer completes diagnostic testing and the procedures specified in Section 7.5. When the installation is complete, the builder or subcontractor completes the CF-6R (Installation Certificate), keeping it at the building site for review by the building department. A copy of the CF-6R is also provided to the HERS rater.
- The HERS rater shall complete the field verification and diagnostic testing as specified in Section 7.6, and provides signed CF-4Rs, Certificate of Field Verification and Diagnostic Testing, to the HERS provider, builder and building department. The building department shall not approve a dwelling unit for occupancy until the building department has received a CF-4R that has been signed by the certified HERS rater.

~~7.5.1 Builder~~

~~Builder employees or subcontractors responsible for completing either diagnostic testing, visual inspection or verification as specified in Section 7.3 shall certify the diagnostic testing results and that the work meets the requirements for compliance credit on the CF-6R.~~

~~The builder shall provide the HERS provider with the identifying location of the group of dwelling units to be included in the sample for field verification and diagnostic testing and the expected date that sampling may begin. The builder shall provide the HERS provider a copy of the CF-6R signed by the builder employees or sub-contractors certifying that diagnostic testing and installation meet the requirements for compliance credit.~~

~~The builder shall provide a *Certificate of Field Verification and Diagnostic Testing* signed and dated by the HERS rater to the building official in conjunction with requests for final inspection for each dwelling unit.~~

~~When re-sampling reveals a failure, builders shall offer, at no charge to building owners in occupied dwelling units in the group, to complete field verification, testing and corrective action if necessary. Building owners may decline to have field verification and testing and corrective action completed. Builders shall report the identifying location of any dwelling unit in which the building owner declines field verification and testing and corrective action to the HERS provider. Builders shall take corrective action as required in all unoccupied dwelling units in the group and in occupied dwelling units in the group where building owners have accepted field verification, testing and corrective action.~~

~~7.5.2 HERS Provider and Rater~~

~~The HERS provider shall maintain a list of the dwelling units in the group from which sampling is drawn, the dwelling units selected for sampling, the dwelling units sampled and the results of the sampling, the dwelling units selected for re-sampling, the dwelling units that have been tested and verified as a result of re-sampling,~~

~~the corrective action taken, and copies of all *Certificates of Field Verification and Diagnostic Testing* for a period of five years.~~

~~The HERS rater providing the diagnostic testing and verification shall sign and date a *Certificate of Field Verification and Diagnostic Testing* certifying that he/she has verified that the requirements for compliance credit have been met. *Certificates of Field Verification and Diagnostic Testing* shall be provided for the tested dwelling unit and each of up to six other dwelling units from the group for which compliance is verified based on the results of the sample. The HERS rater shall provide this certificate to the builder and the HERS provider.~~

~~The HERS Rater shall provide a separate *Certificate of Field Verification and Diagnostic Testing* for each dwelling unit the rater determines has met the diagnostic requirements for compliance. The HERS rater shall identify on the *Certificate of Field Verification and Diagnostic Testing* if the dwelling unit has been tested or if it was an untested dwelling unit approved as part of sample testing. The HERS rater shall not sign a *Certificate of Field Verification and Diagnostic Testing* for a dwelling unit that does not have a CF-6R signed by the installer as required in Sections 7.2 and 7.5.1.~~

~~If field verification and testing on a sampled dwelling unit identifies a failure to meet the requirements for compliance credit, the HERS rater shall report to the HERS provider and the builder that re-sampling will be required.~~

~~If re-sampling identifies another failure, the HERS rater shall report to the HERS provider and the builder that corrective action and diagnostic testing and field verification will be required for all the untested dwelling units in the group. This report shall specify the identifying location of all dwelling units that must be corrected and fully tested.~~

~~The HERS provider shall also report to the builder once diagnostic testing and field verification has shown that the failures have been corrected in all of the dwelling units except those for which the building owner has declined field verification, testing and corrective action.~~

~~When individual dwelling unit testing and verification confirms that the requirements for compliance have been met, the HERS rater shall provide a *Certificate of Field Verification and Diagnostic Testing* for each previously untested/unverified dwelling unit in the group and for each additional dwelling unit of the same model completed during the time required to correct, verify and test the previously untested/unverified dwelling units in the group.~~

~~The HERS provider shall file a report with the building department explaining all action taken (including field verification, testing, corrective actions, offers to building owners for testing and corrective action, and building owner declines of such offers) to bring into compliance dwelling units for which a signed and dated *Certificate of Field Verification and Diagnostic Testing* has been provided to the builder~~

~~7.5.3Building Department~~

~~The building department at its discretion may require independent testing and field verification to in conjunction with the building department's required inspections, and/or observe the diagnostic testing and field verification performed by builder employees or subcontractors and the certified HERS rater in conjunction with the building department's required inspections to corroborate the results documented in installer certifications, and in the *Certificate of Field Verification and Diagnostic Testing*.~~

~~For dwelling units that have used a compliance alternative that requires field verification and diagnostic testing, the building department shall not approve a dwelling unit for occupancy until the building department has received from the builder a *Certificate of Field Verification and Diagnostic Testing* that has been signed and dated by the HERS rater.~~

~~If necessary to avoid delay of approval of dwelling units completed when outside temperatures are below 55°F, building departments may approve compliance credit for refrigerant charge and airflow measurement when installers have used the alternate charging and airflow measurement procedure described in Appendix K, Section 3. This approval will be on the condition that installers provide a signed agreement (CF-6R) to the builder with a copy to the building department to return to correct refrigerant charge and airflow if the HERS rater determines at a later time when the outside temperature is above 55°F that correction is necessary.~~

~~7.4 HERS Provider Notification~~

~~When the documentation author provides a signed Certificate of Compliance (CF-1R) to the builder, which indicates that any HERS diagnostic testing and field verification measure is required for compliance, the documentation author shall notify the HERS provider by phone, FAX or email of the name of the builder, the street address or subdivision and lot number of the dwelling, and the measure(s) that require diagnostic testing and field verification. The documentation author shall certify on the CF-1R that this notification has been completed. The building department shall determine that this notification has taken place before accepting the CF-1R. The builder shall make arrangements for the services of a certified HERS rater prior to installation of the measures, so that once the installation is complete the HERS rater has ample time to complete the field verification and diagnostic testing without delaying final approval of occupancy by the building department.~~

~~7.5~~7.4 Installer Requirements for Installation Certification (CF-6R) ~~7.3~~

Installation certificates (CF-6R) are required for each and every dwelling unit. When the installation of measures that require field verification and diagnostic testing is complete, the builder or the builder's subcontractor shall complete diagnostic testing and the procedures specified in this section. When the installation is complete, the builder or the builder's subcontractor shall complete the CF-6R (Installation Certificate), and keep it at the building site for review by the building department. The builder also shall provide a copy of the Installation Certificate to the HERS rater for any measures requiring field verification and diagnostic testing.

~~7.5.1~~7.4.1 Measures Requiring Diagnostic Testing and Field Verification

When compliance includes duct sealing, ~~ACCA Manual D design and installation,~~ improved air conditioner refrigerant charge and airflow across the evaporator coil, reduced air conditioner fan power ~~refrigerant charge and airflow measurement~~ or building envelope sealing, builder employees or subcontractors shall:

- complete diagnostic testing, and
- certify on the CF-6R the diagnostic test results and that the work meets the requirements for compliance credit.

For refrigerant charge and airflow measurement when the outside temperature is below 55°F, the installer shall follow the alternate charge and airflow measurement procedure described in Section RK3, ACM RD-2005~~Appendix K, Section 3.~~. Builder employees or subcontractors using these procedures shall certify on the CF-6R that they used these procedures, the diagnostic results, that the work meets the requirements for compliance credit, and that they will return to correct refrigerant charge and airflow if the HERS rater determines at a later time when the outside temperature is above 55°F that correction is necessary.

For duct sealing diagnostic testing completed at the rough-in stage of ~~construction using aerosol sealant closures,~~, builder employees or subcontractors shall:

- at rough-in, complete the fan pressurization test and certify on the CF-6R the diagnostic results,
- after installation of the interior finishing wall, ~~verify sealing of the ducts using either the house pressure test or the pressure pan test or by~~ complete the installer visual inspection at final construction stage (See ACM RC-2005) ~~of all duct connections (including duct to air handler connections)~~, and
- certify on the CF-6R the diagnostic results and that the work meets the requirements for compliance credit.

~~7.5.2~~7.4.2 Measures Requiring Field Verification

When compliance includes ~~a thermostatic expansion valve,~~ supply duct location, surface area and R-value improvements ~~duct surface area reductions and duct location improvements beyond those covered by default assumptions,~~, installation of an air conditioner thermostatic expansion valve, high air conditioner EER, and high quality building envelope construction builder employees or subcontractors shall:

- record the feature on the CF-6R,
- record on the CF-6R field measurements required to field verify the measure, and~~record on the CF-6R the duct surface area in each duct location, and~~
- certify on the CF-6R ~~that the duct surface area and locations match those on the plans, and~~ that the work meets the requirements for compliance credit.

~~Installation certifications are required for each and every dwelling unit.~~

~~7.6~~7.5 *Verification and Sampling* Procedures~~7.4 HERS Verification~~

At the builder's option HERS field verification and diagnostic testing shall be completed either for each dwelling unit or for a sample of dwelling units in which the measure requiring field verification and diagnostic testing is installed. Note that if multiple measures requiring field verification and diagnostic testing are installed in dwelling units, sample testing does not have to be completed for all of the measures in the same dwelling unit. Dwelling units in the sample shall be in the same subdivision or multifamily housing development. Field verification and diagnostic testing for compliance credit for duct sealing shall use the diagnostic duct leakage from fan pressurization of ducts in- Section RC3.1, ACM RC-2005. ~~Section 4.3.8.2.1 of Appendix F.~~

Field verification and diagnostic testing for compliance credit for refrigerant charge and airflow measurement shall use the standard charge and airflow measurement procedure specified in ACM RD-2005~~Appendix K~~. Field verification and diagnostic testing shall not use the alternate charge and airflow measurement procedure. Field verification and diagnostic testing shall be scheduled and completed when the outside temperature is above 55°F.

The builder shall provide the HERS provider a copy of the CF-6R containing the installation certifications required in Section 7.5~~7.3~~. Prior to completing field verification and diagnostic testing, the HERS rater shall first verify that the installation certifications have been completed.

If the builder chooses the sampling option, the procedures described in this section shall be followed. Sampling procedures described in this section shall be included in the *Residential Manual*~~*Compliance Supplement*~~.

~~7.6.1~~7.5.1~~7.4.1~~ Initial Field Verification and Testing

The HERS rater shall diagnostically test and field verify the first dwelling unit of each model. To be considered the same model, dwelling units shall be in the same subdivision or multifamily housing development and have the same energy designs and features, including the same floor area and volume, for each dwelling unit, as shown on the CF-1R. For multi-family buildings, variations in exterior surface areas caused by location of dwelling units within the building shall not cause dwelling units to be considered a different model. This initial testing allows the builder to identify and correct any potential construction flaws or practices in the build out of each model. If field verification and diagnostic testing determine that the requirements for compliance are met, the HERS rater shall provide a signed and dated *Certificate of Field Verification and Diagnostic Testing* (CF-4R) to the builder ~~and~~ the HERS provider, and the building department.

~~7.6.2~~7.5.2~~7.4.2~~Sample Field Verification and Testing

After the initial testing is completed, the builder shall identify a group of up to seven dwelling units from which a sample will be selected for testing, and notify the HERS provider. ~~The group shall include only dwelling units expected to be ready for diagnostic testing within a maximum 180-day period.~~ If multiple measures requiring field verification and diagnostic testing are installed, each dwelling unit in the group shall have the same measures requiring field verification and diagnostic testing as the other dwelling units in the group. If some dwelling units have installed a different set of measures requiring field verification and diagnostic testing, these dwelling units shall be in a separate group.

The builder shall identify the group of dwelling units by location of County, City and either the street address or the subdivision and lot number, or the multifamily housing project name and shall identify the names and

license numbers of subcontractors responsible for ~~the duct installation, duct sealing, thermostatic expansion valve installation, refrigerant charge and airflow measurement or envelope sealing that~~ installations requiring~~es~~ diagnostic testing or field verification. The builder may ~~add additional~~ remove dwelling units ~~to~~ from the group by notifying the HERS provider~~ as long as they are completed within the maximum 180-day period~~. Removed dwelling units which are constructed shall either be field verified and diagnostically tested individually or shall be included in a subsequent group for sampling.

The HERS rater shall select a minimum of one dwelling unit out of ~~every seven sequentially completed dwelling units from~~ the group~~, rounded up to the next whole number,~~ for diagnostic testing and field verification~~ as described in Section 7.4~~. When several dwelling units are ready for testing at the same time, the HERS rater shall randomly select the dwelling units to be tested. The HERS rater shall diagnostically test and field verify the dwelling units selected by the HERS rater.

If field verification and diagnostic testing determines that the requirements for compliance are met, the HERS rater shall provide a signed and dated *Certificate of Field Verification and Diagnostic Testing* to the builder, ~~and~~ the HERS provider, and the building department. The *Certificate of Field Verification and Diagnostic Testing* shall report the successful diagnostic testing results and conclusions regarding compliance for the tested dwelling unit.

The HERS rater shall also provide a signed and dated *Certificate of Field Verification and Diagnostic Testing* to the builder and the HERS provider for up to six additional dwelling units ~~from~~ in the group. The *Certificate* shall not be provided for dwelling units in which the feature requiring field verification and diagnostic testing has not been installed, sealed or completed.

~~The maximum 180-day period shall begin on the date of the first *Certificate of Field Verification and Diagnostic Testing* for the group and shall end either with the date of the last verified test from the group or 180 days, whichever is less. Once all homes in the group have been certified, the 180 day clock is reset. Dwelling units within the group for which a *Certificate of Field Verification and Diagnostic Testing* has not been completed within 180 days from the date of the first *Certificate of Field Verification and Diagnostic Testing* for the group, as determined by the HERS provider, shall either be individually tested or be included in a group of dwelling units in a subsequent sample period.~~

Whenever the builder changes subcontractors who are responsible for the feature that is being diagnostically field verified and tested, the builder shall notify the HERS rater of any subcontractors who have changed, and terminate sampling for the identified group. All dwelling units using *HERS Required Verification* features for compliance that were installed by previous subcontractors or were subject to verification and testing under the supervision of a previous HERS provider, for which the builder does not have a completed *Certificate of Field Verification and Diagnostic Testing*, shall either be individually tested or included in a separate group for sampling. Dwelling units with installations completed by new subcontractors shall either be individually tested or shall be included in a new sampling group following a new *Initial Field Verification and Testing*.

The HERS rater shall not notify the builder when sample testing will occur prior to the completion of the work that is to be tested. After the HERS rater notifies the builder when testing will occur, the builder shall not do additional work on the features being tested.

~~7.6.3~~7.5.3~~7.4.3~~ Re-sampling, Full Testing and Corrective Action,

When a failure is encountered during sample testing, the HERS rater shall conduct re-sampling to assess whether that failure is unique or the rest of the dwelling units are likely to have similar failings. The HERS ~~provider~~ rater shall select for re-sampling one ~~out of every seven of all~~ of the up to six untested dwelling units in the group~~, rounded up to the next whole number~~.

If testing in ~~all~~ dwelling units in the re-sample confirms that the requirements for compliance credit are met, then the dwelling unit with the failure shall not be considered an indication of failure in the other dwelling units in the group. The HERS rater shall provide a signed and dated *Certificate of Field Verification and Diagnostic Testing* to the builder, the HERS provider, and the building department for up to six additional dwelling units in the group, including the dwelling unit in the re-sample. The builder shall take corrective action for the dwelling unit with the failure, and then the HERS rater shall retest to verify compliance and issue a signed and dated

Certificate of Field Verification and Diagnostic Testing to the builder. ~~Sampling shall then resume for the remainder of the group.~~

If field verification and testing ~~in any of the dwelling units~~ in the re-sample results in a second failure, the builder shall take corrective action in all unoccupied dwelling units in the group that have not been tested ~~but for which a *Certificate of Field Verification and Diagnostic Testing* has been completed~~. In cases where corrective action would require destruction of building components, the builder may choose to reanalyze compliance and choose different measures that will achieve compliance. In this case a new Certificate of Compliance shall be completed and submitted to the HERS provider, HERS rater and building department. When a builder chooses to take corrective action, ~~T~~the HERS rater shall conduct field verification and diagnostic testing in each of these dwelling units to verify that problems have been corrected and that the requirements for compliance have been met, and shall report to the HERS provider, the builder, and the building department.

Builders shall offer at no charge to building owners[1] (see Section 7.10)~~-~~ in occupied dwelling units in the group to complete field verification and testing and corrective action if necessary. ~~Building owners may decline this offer.~~ Builders shall report to the HERS provider the identifying location of any dwelling unit in which the building owner declines field verification and testing and corrective ~~action to the HERS provider~~. The HERS provider shall verify that the builder has made this offer. If a building owner in an occupied dwelling unit declines this offer, field verification, testing and corrective action will not be required for that dwelling unit and the dwelling unit will no longer be considered a part of the group. If a building owner accepts this offer, the builder shall take corrective action. The HERS rater shall then conduct field verification and diagnostic testing to verify that problems have been corrected and that the requirements for compliance have been met, and shall report to the HERS provider, builder, and the building department.

The HERS provider shall file a report with the building department explaining all action taken (including field verification, testing, corrective action, offers to building owners for testing and corrective action and building owner declines of such offers) to bring into compliance dwelling units for which full testing has been required ~~a signed and dated *Certificate of Field Verification and Diagnostic Testing* has been provided to the builder~~. If corrective action requires work not specifically exempted by ~~Section 112 of~~ the ~~UMC~~ CMC or ~~Section 106 of~~ the ~~UBC~~CBC, the builder shall obtain a permit from the building department prior to commencement of any of the work.

~~Until corrections, field verification and testing of all dwelling units in the group have been completed or building owners in occupied dwelling units have declined corrective action, sampling of additional dwelling units in the group shall cease.~~ If additional dwelling units in the group are completed during the time required to correct, field verify and test the previously completed dwelling units in the group, the rater shall individually field verify and diagnostically test those additional dwelling units to confirm that the requirements for compliance credit are met. ~~Once corrections, field verification and testing is completed for all dwelling units that have a *Certificate of Field Verification and Diagnostic Testing*, excepting those where building owners have declined corrective action, the builder shall either resume sampling for the remainder of the dwelling units in the group or terminate the group.~~

Corrections shall not be made to a sampled or re-sampled dwelling unit to avoid a failure. If corrections are made to a sampled or re-sampled dwelling unit to avoid failure, corrections, field verification and testing shall be performed on 100% of the dwelling units in the group.

~~7.7~~7.6 Third Party Quality Control Programs

The Commission may approve Third Party Quality Control Programs that serve the function of HERS raters for field verification purposes. Third Party Quality Control Programs shall provide training to installers regarding compliance requirements for measures for which diagnostic testing and field verification is required. Third Party Quality Control Programs shall collect data from participating installers for each installation completed for compliance credit, complete data checking analysis to evaluate the validity and accuracy of the data to independently determine whether compliance has been achieved, provide direction to the installer to retest and correct problems when data checking determines that compliance has not been achieved, require

[1] When the term "building owner" is used in this Chapter, it shall mean owner of the dwelling unit.

resubmission of data when retesting and correction is directed, and maintain a database of all data submitted by installers in a format that is acceptable to the Commission and available to the Commission upon request. The data that is collected by the Third Party Quality Control Program shall be more detailed than the data required for showing compliance with the Standards, shall provide an independent check on the validity and accuracy of the installer's claim that compliance has been achieved, and shall not be alterable by the installer to indicate that compliance has been achieved when in fact compliance has not been achieved.

The Third Party Quality Control Program shall also obtain the services of a HERS rater to conduct independent field verifications, completing all of the responsibilities of a HERS rater as specified in this Chapter with the exception that sampling shall be completed for a group of up to thirty dwelling units with a minimum sample of one out of every thirty sequentially completed dwelling units from the group. The HERS rater shall be an independent entity from the Third Party Quality Control Program. Re-sampling, Full Testing and Corrective Action shall be completed as specified in section 7.6.3 with the exception that re-sampling shall be completed for a minimum of one out of every thirty dwelling units from the group.

The Third Party Quality Control Program shall meet all of the requirements of a HERS rater specified in the Commission's HERS Program regulations (California Code of Regulations, Title 20, Division 2, Chapter 4, Article 8, Sections 1670 -1675), including the requirement to be an independent entity from the builder and the HERS rater that provides independent field verifications, subcontractor installer as specified by section 1673(i). A Third Party Quality Control Program may have business relationships with installers participating in the Program to advocate or promote the Program and an installer's participation in the Program, and to advocate or promote products that the Third Party Quality Control Program sells to installers as part of the Program.

Prior to approval by the Commission, the Third Party Quality Control Program shall provide a detailed explanation to the Commission of 1) the data that is to be collected from the installers, 2) the data checking process that will be used to evaluate the validity and accuracy of the data, 3) the justification for why this data checking process will provide strong assurance that the installation actually complies, and 4) the format for the database that will be maintained and provided to the Commission upon request. The Third Party Quality Control Program may apply for a confidential designation of this information as specified in the Commission's Administrative Regulations (California Code of Regulations, Title 20, Division 2, Chapter 7, Article 2, Section 2505). The Third Party Quality Control Program shall also provide a detailed explanation of the training that will be provided to installers, and the procedures that it will follow to complete independent field verifications.

The Third Party Quality Control Program shall be considered for approval as part of the rating system of a HERS Provider, which is certified as specified in the Commission's HERS Program regulations, Section 1674. A Third Party Quality Control Program can be added to the rating system through the recertification of a certified HERS Provider as specified by Section 1674(d).

~~7.8~~7.7 Sampling for Additions or Alterations

When compliance for an addition or alteration requires diagnostic testing and field verification, the building owner may choose for the testing and field verification to be completed for the dwelling unit alone or as part of a sample of dwelling units for which the same installing company has completed work that requires testing and field verification for compliance. The building owner or agent of the building owner shall complete the applicable portions of a Certificate of Compliance (CF-1R)~~and shall complete the HERS Provider Notification as specified in section 7.4~~. The HERS provider shall define the group for sampling purposes as all dwelling units where the building permit applicant has chosen to have testing and field verification completed as part of a sample for the same installing company. The group shall be no larger than seven. The installing company may request a smaller group for sampling. Whenever the HERS rater for the group is changed, a new group will be established. Initial Field Verification and Testing shall be completed for the first dwelling unit in each group. Re-sampling, Full Testing and Corrective Action shall be completed if necessary as specified by section 7.6.3.

Field verification may be completed by an approved Third Party Quality Control Program as specified in section 7.7. The group for sampling purposes shall be no larger than thirty when a Third Party Quality Control Program is used. The Third Party Quality Control Program may define the group instead of the Provider. When a Third Party Quality Control Program is used, the CF-6R shall document that data checking has indicated that the

dwelling unit complies. The building official may approve compliance based on the CF-6R on the condition that if sampling indicates that re-sampling, full testing and corrective action is necessary, such work shall be completed.

~~7.9~~7.8 Summary of Responsibilities

This section summarizes responsibilities described previously in this chapter and organizes them by the responsible party.

~~7.9.1 Certificate of Compliance Documentation Author~~

~~When the Certificate of Compliance (CF-1R) indicates that any HERS field verification and diagnostic testing measure is required for compliance, the documentation author shall notify the HERS provider by phone, FAX or email and send a copy of the CF-1R to the HERS provider. The documentation author shall certify on the CF-1R that this notification has been completed.~~

~~7.9.1~~7.8.1 Builder

The builder shall make arrangements for the services of a certified HERS rater prior to installation of the measures, so that once the installation is complete the HERS rater has ample time to complete the field verification and diagnostic testing without delaying final approval of occupancy by the building department.

Builder employees or subcontractors responsible for completing either diagnostic testing, visual inspection or verification as specified in Section 7.5 shall certify the diagnostic testing results and that the work meets the requirements for compliance credit on the CF-6R.

The builder shall provide the HERS provider with the identifying location of the group of dwelling units to be included in the sample for field verification and diagnostic testing. The builder shall provide the HERS provider a copy of the CF-6R signed by the builder employees or sub-contractors certifying that diagnostic testing and installation meet the requirements for compliance credit.

The builder shall provide a *Certificate of Field Verification and Diagnostic Testing* (CF-4R) signed and dated by the HERS rater to the building official in conjunction with requests for final inspection for each dwelling unit.

When re-sampling reveals a failure, builders shall offer, at no charge to building owners in occupied dwelling units in the group, to complete field verification, testing and corrective action if necessary. Building owners may decline to have field verification and testing and corrective action completed. Builders shall report the identifying location of any dwelling unit in which the building owner declines field verification and testing and corrective action to the HERS provider. Builders shall take corrective action as required in all unoccupied dwelling units in the group and in occupied dwelling units in the group where building owners have accepted field verification, testing and corrective action.

~~7.9.2~~7.8.2 HERS Provider and Rater

The HERS provider shall maintain a list of the dwelling units in the group from which sampling is drawn, the dwelling units selected for sampling, the dwelling units sampled and the results of the sampling, the dwelling units selected for re-sampling, the dwelling units that have been tested and verified as a result of re-sampling, the corrective action taken, and copies of all *Certificates of Field Verification and Diagnostic Testing* for a period of five years.

The HERS rater providing the diagnostic testing and verification shall sign and date a *Certificate of Field Verification and Diagnostic Testing* certifying that he/she has verified that the requirements for compliance credit have been met. *Certificates of Field Verification and Diagnostic Testing* shall be provided for the tested dwelling unit and each of up to six other dwelling units from the group for which compliance is verified based on the results of the sample. The HERS rater shall provide this certificate to the builder, the HERS provider, and the building department.

The HERS rater shall provide a separate *Certificate of Field Verification and Diagnostic Testing* for each dwelling unit the rater determines has met the diagnostic requirements for compliance. The HERS rater shall identify on the *Certificate of Field Verification and Diagnostic Testing* if the dwelling unit has been tested or if it was an untested dwelling unit approved as part of sample testing. The HERS rater shall not sign a *Certificate of Field Verification and Diagnostic Testing* for a dwelling unit that does not have a CF-6R signed by the installer as required in Section 7.5.

If field verification and testing on a sampled dwelling unit identifies a failure to meet the requirements for compliance credit, the HERS rater shall report to the HERS provider, the builder, and the building department that re-sampling will be required.

If re-sampling identifies another failure, the HERS rater shall report to the HERS provider, the builder, and the building department that corrective action and diagnostic testing and field verification will be required for all the untested dwelling units in the group. This report shall specify the identifying location of all dwelling units that shall be fully tested and corrected.

The HERS provider shall also report to the builder once diagnostic testing and field verification has shown that the failures have been corrected in all of the dwelling units except those for which the building owner has declined field verification, testing and corrective action.

When individual dwelling unit testing and verification confirms that the requirements for compliance have been met, the HERS rater shall provide a *Certificate of Field Verification and Diagnostic Testing* for each dwelling unit in the group.

The HERS provider shall file a report with the building department explaining all action taken (including field verification, testing, corrective actions, offers to building owners for testing and corrective action, and building owner declines of such offers) to bring into compliance dwelling units for which full testing has been required.

~~7.9.3~~7.8.3 Third Party Quality Control Program

An approved Third Party Quality Control Program shall:

- Provide training to installers regarding compliance requirements for measures for which diagnostic testing and field verification is required,
- Collect data from participating installers for each installation completed for compliance credit,
- Complete data checking analysis to evaluate the validity and accuracy of the data to independently determine whether compliance has been achieved,
- Provide direction to the installer to retest and correct problems when data checking determines that compliance has not been achieved,
- Require resubmission of data when retesting and correction is directed, and
- Maintain a database of all data submitted in a format that is acceptable to the Commission and available to the Commission upon request.

The Third Party Quality Control Program shall obtain the services of an independent HERS rater to conduct independent field verifications, completing all of the responsibilities of a HERS rater as specified in this Chapter with the exception that sampling shall be completed for a group of up to thirty dwelling units and sampling and re-sampling shall be completed for a minimum of one out of every thirty sequentially completed dwelling units from the group.

~~7.9.4~~7.8.4 Building Department

When the Certificate of Compliance (CF-1R) indicates any HERS diagnostic testing and field verification measure is required for compliance, the building department shall verify that the Documentation Author has notified the HERS Provider before accepting the CF-1R.

The building department at its discretion may require independent testing and field verification to be scheduled so that it can be completed in conjunction with the building department's required inspections, and/or observe the diagnostic testing and field verification performed by builder employees or subcontractors and the certified HERS rater in conjunction with the building department's required inspections to corroborate the results documented in installer certifications, and in the *Certificate of Field Verification and Diagnostic Testing*.

For dwelling units that have used a compliance alternative that requires field verification and diagnostic testing, the building department shall not approve a dwelling unit for occupancy until the building department has received a *Certificate of Field Verification and Diagnostic Testing* that has been signed and dated by the HERS rater.

If necessary to avoid delay of approval of dwelling units completed when outside temperatures are below 55°F, building departments may approve compliance credit for refrigerant charge and airflow measurement when installers have used the alternate charging and airflow measurement procedure described in ACM RD-2005, Section RD3. This approval will be on the condition that installers provide a signed agreement to the builder with a copy to the building department to return to correct refrigerant charge and airflow if the HERS rater determines at a later time when the outside temperature is above 55°F that correction is necessary.

~~7.10~~7.9 Definitions of Terms Used In This Chapter

The following definitions apply to the procedures described in this document.

Building Owner means the owner of the dwelling unit.

Builder means the general contractor responsible for construction.

Building Department means the city, county or state agency responsible for approving the plans, issuing a building permit and approving occupancy of the dwelling unit.

Dwelling Unit means the building for single-family residences or each dwelling unit within a multifamily building project.

HERS Provider means an organization that the Commission has approved to administer a home energy rating system program, certify raters and maintain quality control over field verification and diagnostic testing required for compliance with the Energy Efficiency Standards.

HERS Rater means a person certified by a Commission approved HERS Provider to perform the field verification and diagnostic testing required for demonstrating compliance with the standards.

Independent Entity means having no financial interest in, and not advocating or recommending the use of any product or service as a means of gaining increased business with, firms or persons specified in Section 1673(i) of the California Home Energy Rating System Program regulations (California Code of Regulations, Title 20, Division 2, Chapter 4, Article 8). **Financial Interest** means an ownership interest, debt agreement, or employer/employee relationship. Financial interest does not include ownership of less than 5% of the outstanding equity securities of a publicly traded corporation.

NOTE: The definitions of "independent entity" and "financial interest," together with Section 1673(i), prohibit conflicts of interest between providers and raters, or between providers/raters and builders/subcontractors.

Documentation Author means the person responsible for completing the compliance documentation that demonstrates whether a building complies with the standards. Compliance documentation requirements are defined in the Residential Manual.

Model means a floor plan and house design that is repeated throughout a subdivision or within a multi-family building. To be considered the same model, dwelling units shall be in the same subdivision or multi-family housing development and have the same energy designs and features, including the same floor area and volume, for each dwelling unit, as shown on the CF-1R. For multi-family buildings, variations in exterior surface areas caused by location within the building shall not cause dwelling units to be considered a different model.

Certificate of Field Verification and Diagnostic Testing (CF-4R) means a document with information required by the Commission that is prepared by the HERS rater to certify that measures requiring field verification and diagnostic testing comply with the requirements.

Certificate of Compliance (CF-1R) means a document with information required by the Commission that is prepared by the Documentation Author that indicates whether the building includes measures that require field verification and diagnostic testing.

Installation Certificate (CF-6R) means a document with information required by the Commission that is prepared by the builder or installer verifying that the measure was installed to meet the requirements of the standards.

8. Compliance Supplement

Each ACM vendor is required to publish a Compliance Supplement to the normal program users manual. The Compliance Supplement serves two major purposes. First, it helps building permit applicants to use the ACM correctly and to prepare complete documentation of their analyses. Second, it helps building officials to check permit applications for compliance with the low-rise residential Building Energy Efficiency Standards. As a result, it helps to assure that both the performance standards and the ACM are used properly.

The Compliance Supplement ~~must~~shall describe the specific procedures for using the ACM for compliance with the Building Energy Efficiency Standards. The supplement ~~must~~shall provide instructions for preparing the building input, using the correct fixed and restricted inputs, and for using each of the optional capabilities for which the ACM is approved. Also included are procedures for generating the standard reports and documenting the analysis. A sample of a properly documented building analysis ~~must~~shall be included.

All Compliance Supplements ~~must~~shall be written in a clear and concise manner and with a common organization and format. Variations in format may be approved by the CEC, however, to allow for the differences between ACMs. This will assure consistency between the compliance supplements of different ACMs, simplifying the enforcement task of building officials. Also, vendors of approved ACMs are required to make copies of their compliance supplement available to all building departments in California.

The following sections describe the information that ~~must~~shall be included in all compliance supplements. It also presents the required organization for that information.

8.1 CEC Approval

This section includes a copy of the official CEC notice of approval of the ACM. The notice may include restrictions or limitations on the use of the ACM. It will also include the date of approval, and may include an expiration date for approval as well. The notice will indicate which optional capabilities the ACM is approved for and other restrictions on its use for compliance. The CEC will provide this notice upon completion of evaluation of the ACM application.

8.2 Program Capabilities

This section discusses the program capabilities, with supporting written material explaining, as necessary, how the ACM treats each one. Reference may be made to non-compliance sections of the ACM Users Manual for more complete descriptions, if they exist.

8.3 Standard Input/Output Report

This section explains how to use the program to prepare the standard input/output reports.

8.4 Fixed and Restricted Inputs

Approved ACMs ~~must~~shall automatically use the standard fixed and restricted inputs for the standard design run. It ~~must~~shall also default to the standard assumptions for the proposed design run. When the alternative fixed and restricted inputs are used for the proposed design run, the ACM ~~must~~shall report this in the *Special Features and Modeling Assumptions* sections of the standard reports.

This section of the Compliance Supplement explains the fixed and restricted inputs and how they are invoked in the ACM. This is especially important if the ACM offers the possibility of non-compliance runs which can deviate from the fixed and restricted inputs.

8.5 Preparing Basic Input

This section covers the basic use of the ACM for compliance. Optional capabilities are described in greater detail. Reference may be made to the users manual, but this section should include a complete summary of all inputs and/or commands necessary for compliance.

8.6 Optional Capabilities

This section explains the procedures for using each of the optional capabilities of the ACM. It is a parallel section to the basic inputs section above. The section for each optional capability should explain how to prepare inputs, how to document assumptions, and what the limitations are of each analysis capability.

8.7 Special Features and Modeling Assumptions

This section explains the use of the Special Features and Modeling Assumptions listing to highlight the importance of verifying the special features and the aspects of those features that were modeled to achieve compliance.

8.8 Field Verification ~~HERS Required~~

This section explains the use of the ~~HERS Required~~Field Verification and Diagnostic Testing listing to highlight the special features that require diagnostic testing by a certified home energy rater under the supervision of a CEC approved HERS provider to assure proper installation and verification. This section may rely on the information provided in Chapter 7, other sections of this manual, or may refer to other Commission documents.

8.9 Checklist for Compliance Submittal

This section should contain a concise checklist of all items that ~~must~~shall be included in a compliance submittal to a building official using the ACM.

8.10 Sample Compliance Documentation

This section should include a complete set of compliance documentation for a sample building. The building need not be overly complex, nor need it include every program capability. The example should, however, include all documentation and standard reports that would normally be submitted. This example will serve as a model to ACM users and building officials of what a proper compliance submittal should look like.

8.11 Compliance Statement

The following statement ~~must~~shall appear within the first several pages of the Supplement:

> [ACM Name] may be used to show compliance with California's Residential Building Energy Efficiency Standards.

8.12 Related Publications

The Compliance Supplement should refer users to the following related CEC publications and where to obtain them:

- ~~2001~~ 2005 *Building Energy Efficiency Standards* (P400-00-001)
- ~~2001~~ 2005 *Residential Manual* (P400-00-029)

Both publications are available from:

California Energy Commission
Publications Unit
1516 Ninth Street
Sacramento CA 95814
(916) 654-5200

9. Vendor Requirements Availability to CEC

All ACM vendors are required to submit at least one version of the ACM to the California Energy Commission. An updated copy or access to the approved version of the ACM ~~must~~shall be kept by the CEC to maintain approval for compliance usage of the ACM. The CEC agrees not to duplicate the ACM except for the purpose of analyzing it, for verifying building compliance with the ACM, or to verify that only approved versions of the ACM are used for compliance.

9.1 Building Department Support

ACM vendors ~~must~~shall provide a copy of the ACM Compliance Supplement to all local building enforcement agencies who request one in writing.

9.2 User Support

It is expected that ACM vendors will offer support to their users with regard to the use of the ACM for compliance purposes. Vendors may charge a fee for user support.

9.3 ACM Vendor Demonstration

The CEC may request ACM vendors to physically demonstrate their program's capabilities. One or more demonstrations may be requested before approval is granted.