25. SEALING WITH DUCT MASTIC

- All Connections
  - Mastic shall be installed as prescribed by manufacturer:
    - with proper surface preparation/cleaning.
    - within temperature and moisture limitations.
    - with proper setup time.
- Rigid Metal Ducts and Components
  - Mastic by itself may be used to seal gaps up to 1/8" (e.g., on adjustable elbow joints, seams in wyes, metal duct seams, etc.).
  - Mastic shall be reinforced with fiberglass mesh tape when used to seal gaps larger than 1/8".
  - When sealing longitudinal seams in new rigid metal ducts, mastic is required on S-and-drive, snap lock, and government lock seams.
- Flexible Metallic and Nonmetallic Ducts
  - Mastic used to seal core-to-fitting connections may be:
    - externally applied over the duct core and rigid fitting, or
    - internally placed between the core and the fitting.
  - Externally-Applied Mastic
    - Mastic shall be reinforced with fiberglass mesh tape when:
      - a gap greater than 1/8" exists between the duct core and the fitting (starting collar, coupling, elbow, wye, etc.).
      - mastic is used to seal the outer vapor barrier (jacket).

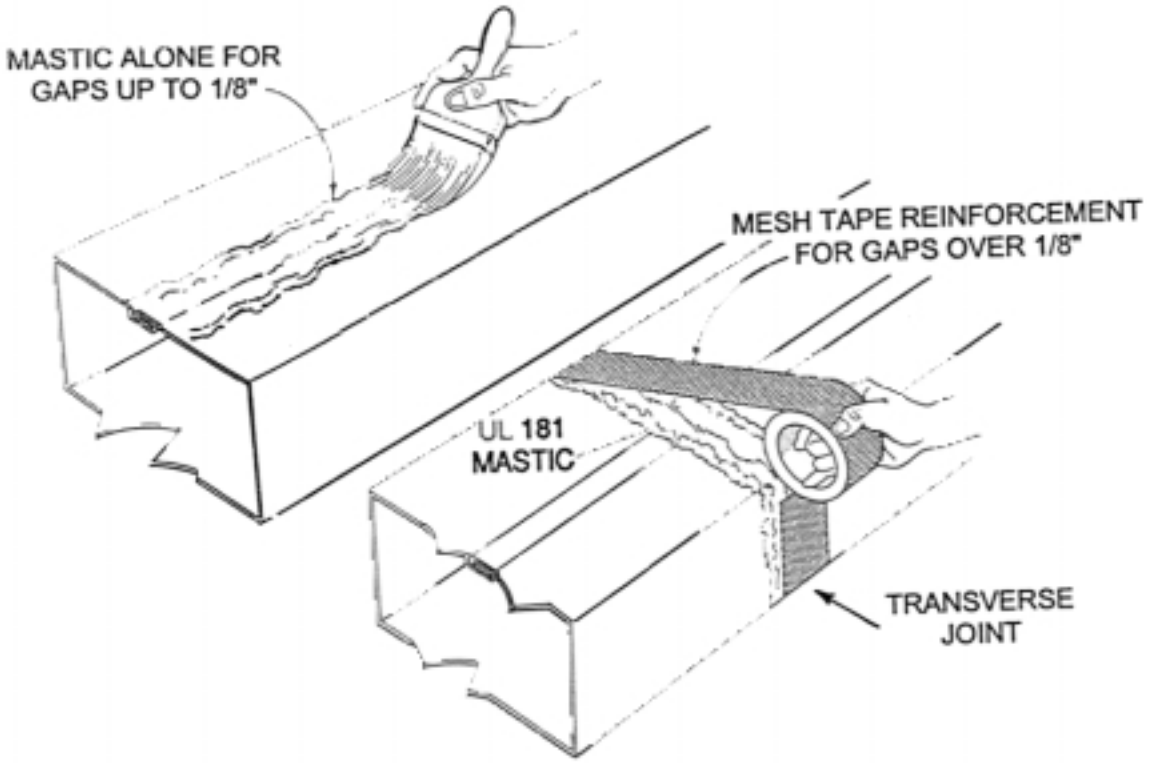

© PG&E • 5/7/99

25. SEALING WITH DUCT MASTIC (continued)

- Reinforcement of Mastic with Fiberglass Mesh Tape
  - Mesh fabric shall be imbedded between two layers of duct mastic to form a mastic closure system.
    - The first layer of mastic shall:
      - be centered over the joint or gap to be sealed.
      - extend at least 1" onto each of the joined surfaces.
      - extend beyond the width of the mesh.
    - The mesh fabric shall be:
      - embedded in the mastic.
      - applied at least one layer thick over the entire joint or gap.
      - wrapped around the entire circumference on transverse joints (e.g., where two sections of duct are joined together).
    - A second layer of mastic shall be installed over the mesh, filling the scrim pattern completely and covering the mesh.
  - Width of mesh tape shall be as prescribed in Item 3.

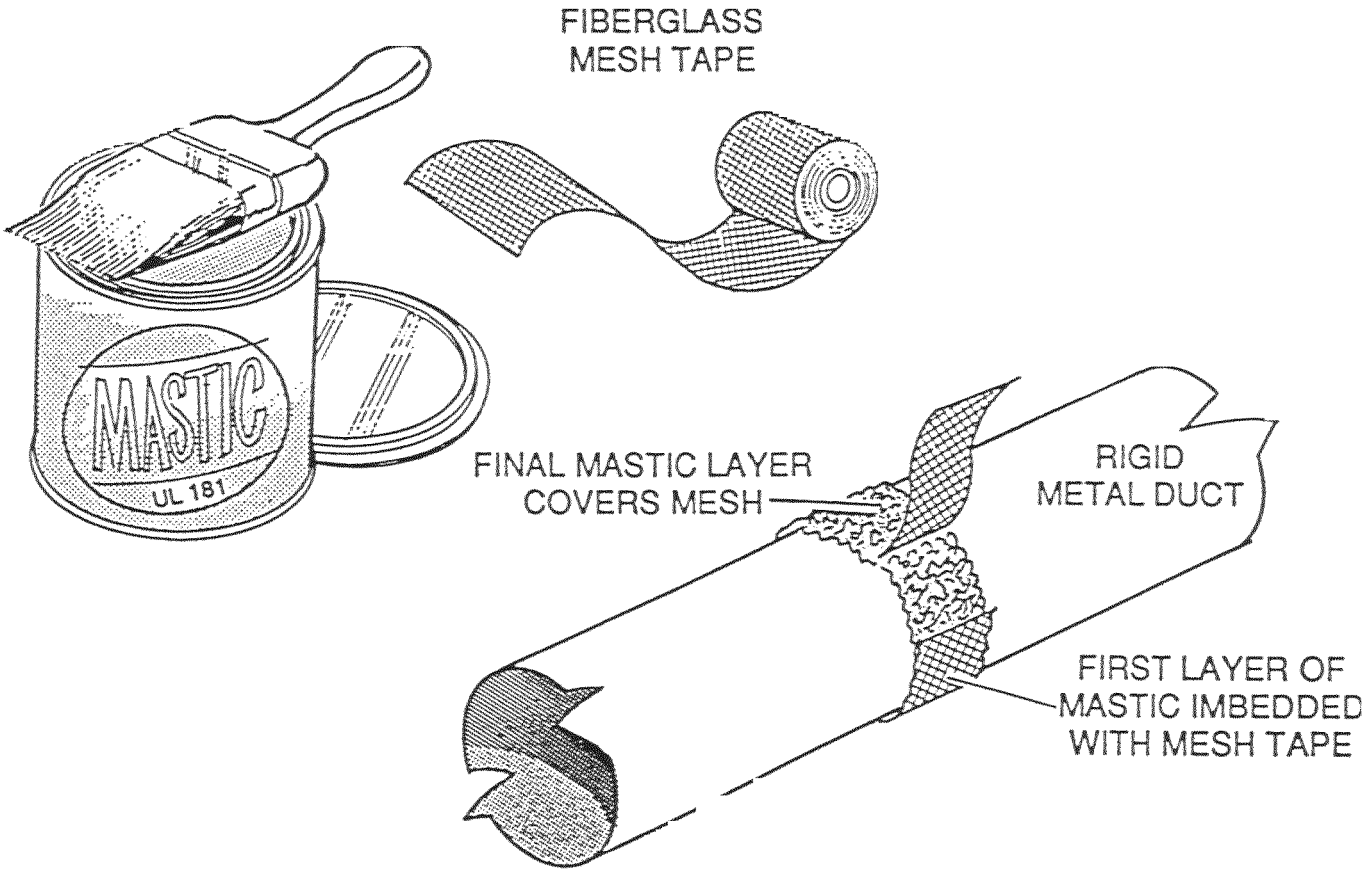

© PG&E • 5/7/99

26. SEALING WITH TAPE

- Pressure Sensitive Tapes
  - Tapes shall be installed as prescribed by manufacturer:
    - with proper surface preparation/cleaning.
    - with recommended amount of pressure applied.
    - within temperature and moisture limitations.
  - Successive wraps of tape shall be staggered and should overlap by 50 to 75% of the tape width.
  - At least three wraps of tape shall be applied when sealing:
    - Transverse joints in round or rectangular metal ducts (the joint formed when two pieces of duct are spliced together).
    - Flexible duct core-to-fitting attachments (with a drawband also installed to secure the core).
    - Vapor barrier (jacket) splices on flexible ducts.
  - Gaps wider than 1/4" sealed with tape:
    - Duct mastic shall be applied at least 1/8" thick over the installed tape to provide additional strength and durability.
    - Mastic shall extend beyond the width of the tape.

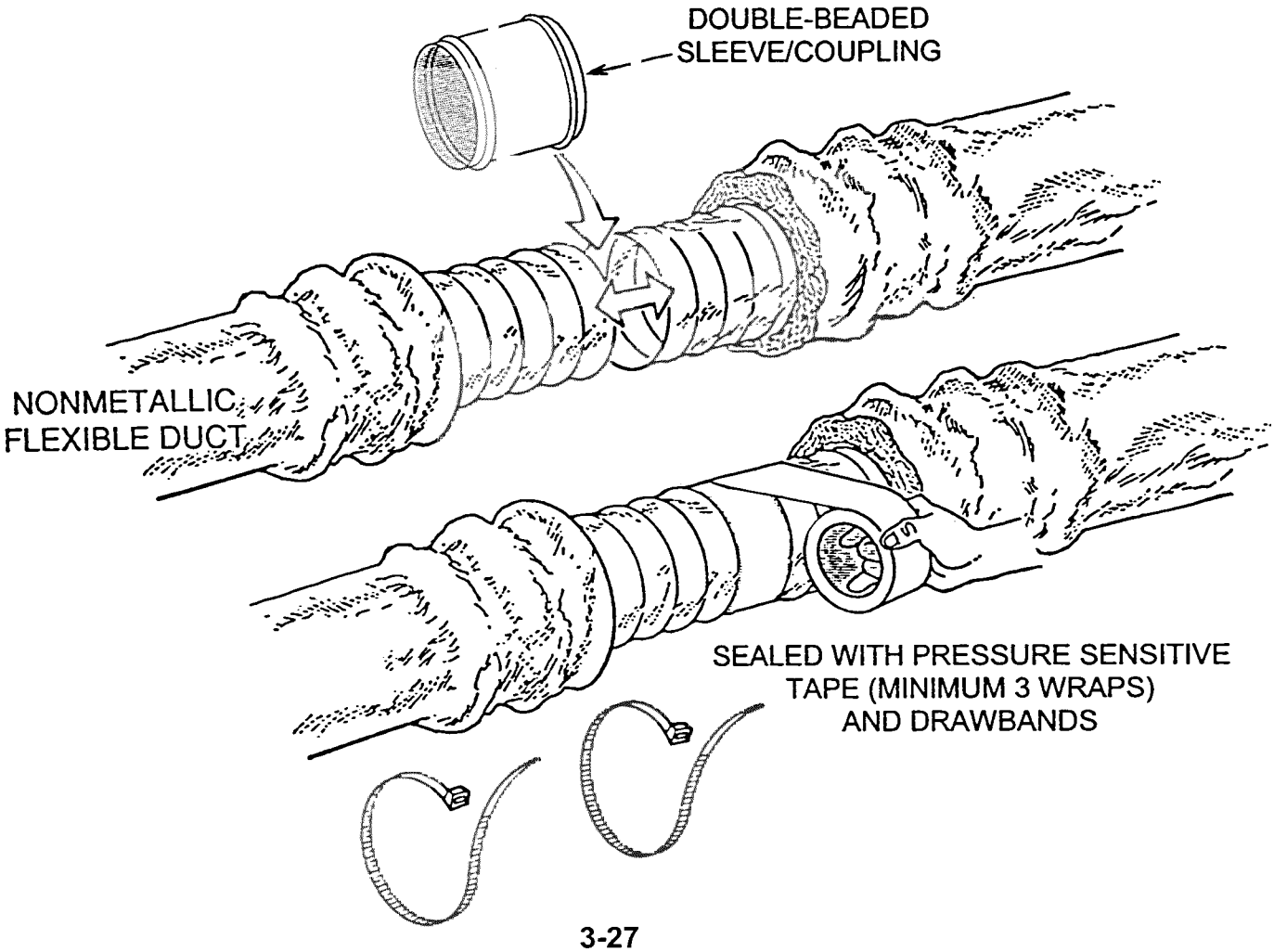

© PG&E • 5/7/99

26. SEALING WITH TAPE (continued)
   - Heat Activated Tape
     - Tapes shall be installed as prescribed by manufacturer.
   - Tapes for High Temperature Applications
     - Pressure sensitive tape with a service temperature rating of at least 265°F shall be used when sealing:
       - within 1" of a double-wall gas flue/vent pipe.
       - within 6" of a single-wall gas flue/vent pipe.

27. SEALING REFRIGERANT LINES
   - Cork tape shall be used for sealing gaps where refrigerant lines penetrate the plenum or cabinet of the FAU.

28. SEALING REMOVABLE SERVICE PANELS
   - UL 181A or 181B *metallic* pressure sensitive tape with *non-butyl* adhesive shall be used to seal service panels, filter access covers, etc.

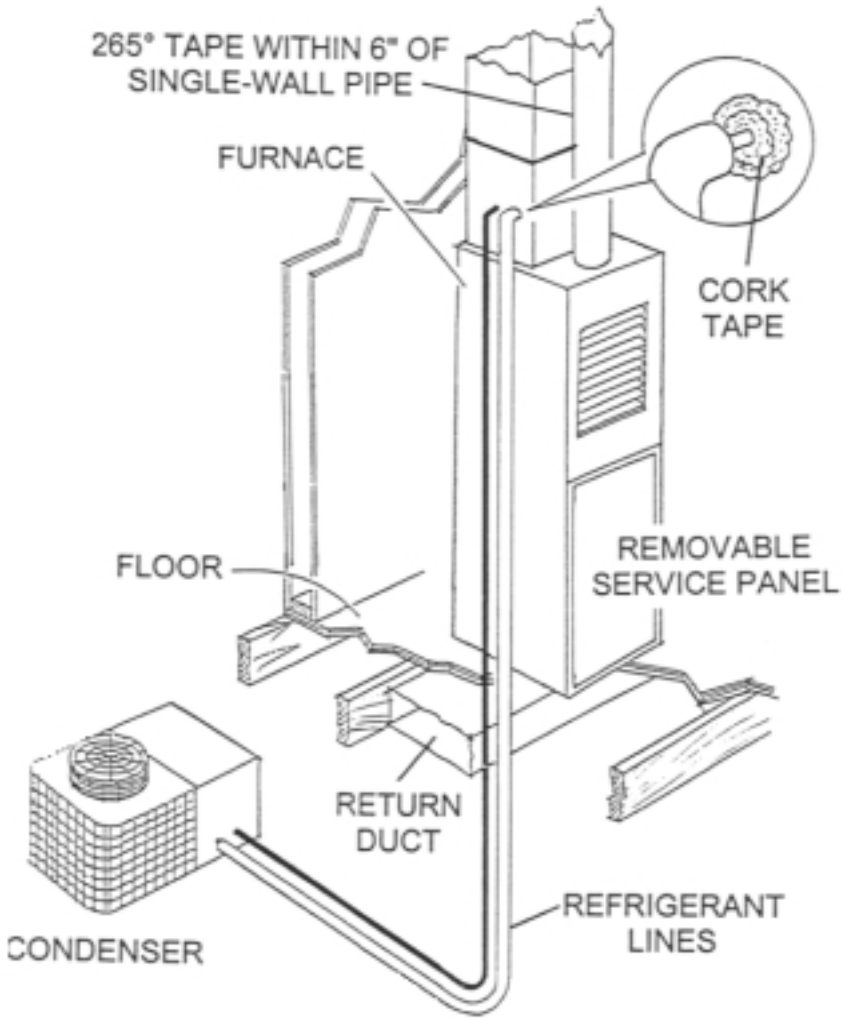

© PG&E • 5/7/99 (Rev. 9/15/00)

29. SEALING WITH AEROSOL-APPLIED SEALANTS

- All Ductwork and Components
  - Sealants shall be applied using an approved aerosol injection system (see Item 6).
  - Maximum Leak Size
    - Per aerosol system manufacturer's specifications, but no larger than 1/4".
  - Duct Types
    - Aerosol sealants may be used in the types of ducts and under the conditions specified by the aerosol system manufacturer.
- Application
  - Aerosol-applied sealing shall be performed in strict conformance with manufacturer's procedures, including:
    - Injection process and procedures that minimize wall deposition (e.g., automated injection control).
    - Safety procedures to protect equipment, house, installers and occupants from unnecessary exposure to the sealant.
    - Installer training requirements.
    - Paper and electronic documentation of sealing process.

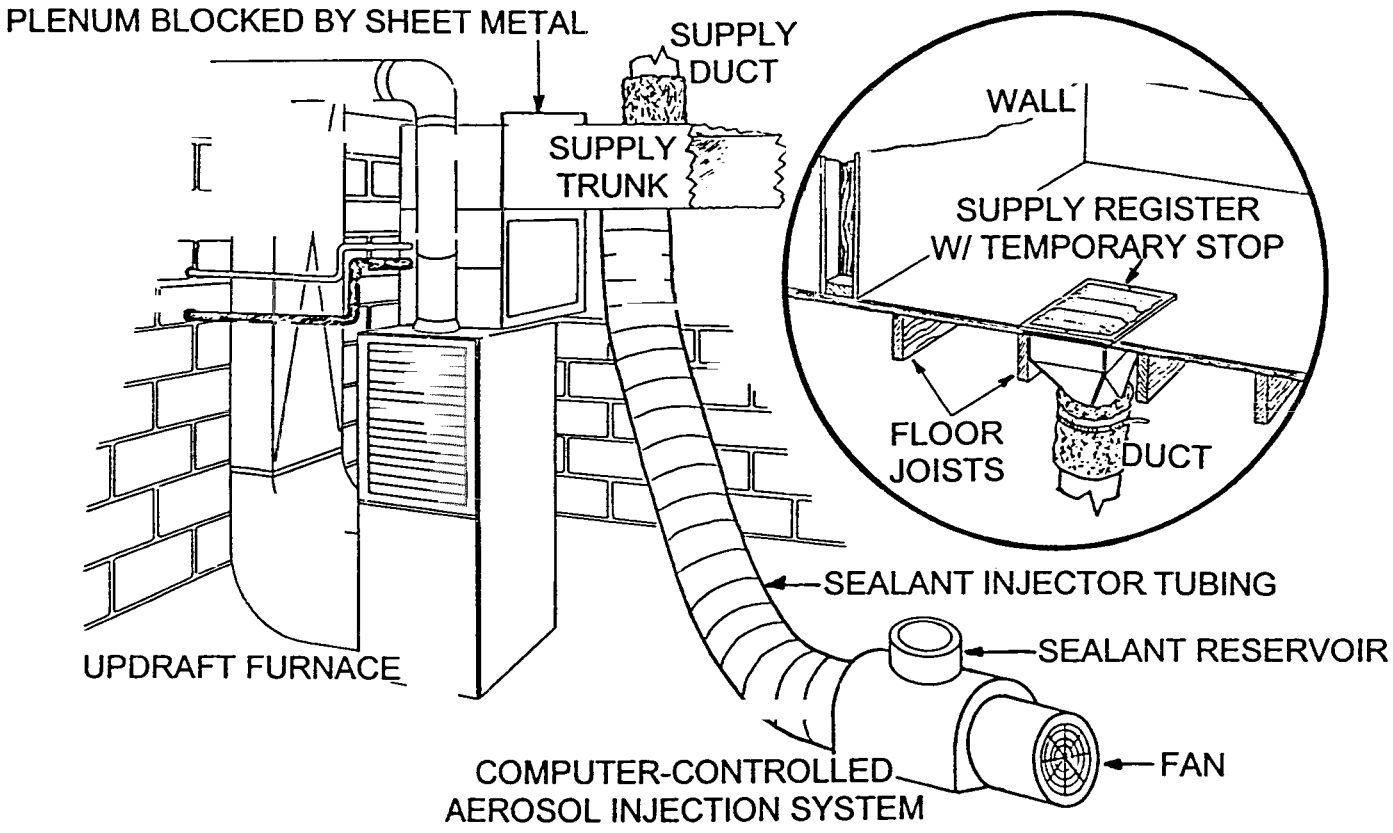

© PG&E • 5/7/99

30. REPAIRING AND SEALING FLEXIBLE NONMETALLIC DUCTS

- Attachment of Duct Core to Fitting
  - At least 2" of duct core shall be pulled *onto the fitting, with at least 1" extending* past the bead.
  - Fitting must provide additional 1" wide area beyond duct core for application of tape or externally-applied mastic.
  - A drawband (duct tie or metal clamp) shall be:
    - placed behind the bead to secure the core onto the fitting.
    - installed per Item 19.
  - When a preexisting fitting is <u>not</u> beaded:
    - Duct core shall be secured to the fitting with internally-placed mastic (Item 24) and a drawband (Item 19), <u>or</u>
    - The core's wire coil shall be secured to the fitting with evenly-spaced #8 sheet metal screws <u>plus</u> mastic or tape.
      - Each screw shall penetrate a 2" x 2" or larger strip of metallic "181B-FX" tape externally applied to the duct core.
      - 3 screws for fittings under 12", 5 screws for 12" or larger.
- Sealing Methods
  - All Closure Systems
    - Materials and application shall be in compliance with Item 24.
  - Mastic and Fiberglass Mesh Tape
    - Mastic and mesh shall be installed as prescribed in Item 25.
  - Pressure Sensitive Tapes
    - Tape shall be installed in compliance with Item 26.
  - Aerosol-Applied Sealants
    - Aerosol sealants shall be applied in compliance with Item 29.

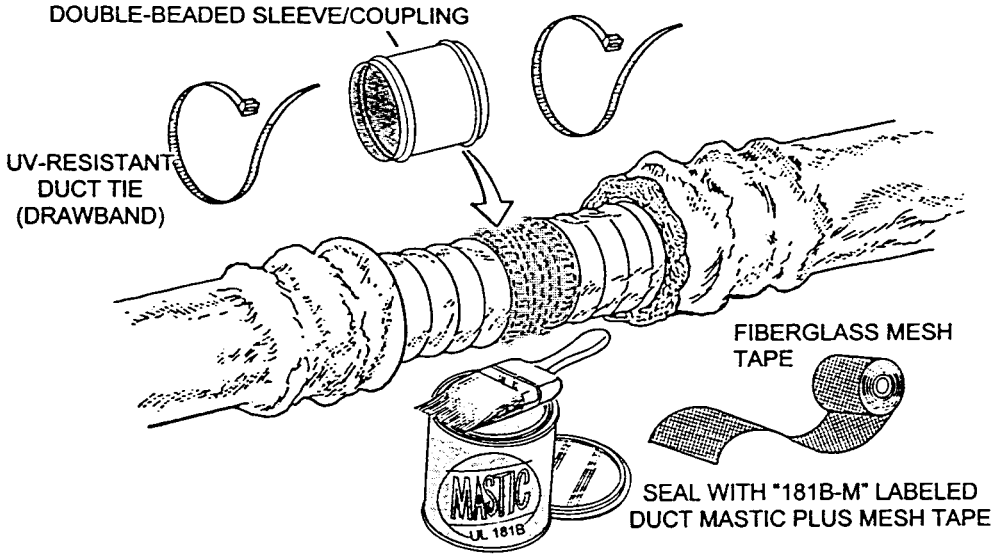

© PG&E • 5/7/99 (Rev. 9/15/00)

30 REPAIR AND SEALING FLEXIBLE NONMETALLIC DUCTS (continued)

- Insulation and Vapor Barrier
  - Insulation shall completely cover the duct core and fitting.
  - The vapor barrier (jacket) shall be pulled back over the insulation
    - Where two pieces of duct are joined (splices), the two jackets shall overlap at least 2".
    - Vapor barrier shall be secured/sealed with a drawband and/or three *staggered* wraps of pressure sensitive tape.
- Core Repairs
  - Holes/damage in the duct core shall be repaired by removal of the damaged section and insertion of a sleeve/coupling.
- Jacket Repairs
  - Rips and holes in the vapor barrier shall be repaired with pressure sensitive tape or with mastic and mesh tape.

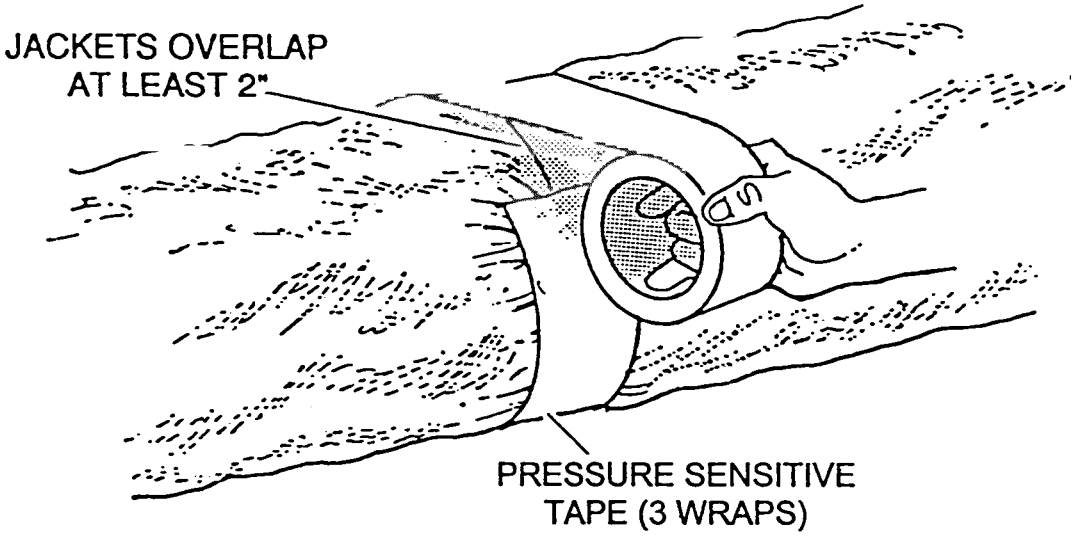

© PG&E • 5/7/99 (Rev. 9/15/00)

31. REPAIRING AND SEALING FLEXIBLE METALLIC DUCTS

- Attachment of Duct Core to Fitting
  - End of core shall be trimmed squarely.
  - Sleeve/coupling required at splices (field-installed when not integral part of the duct).
  - At least 1" of duct core shall be placed over fitting.
  - Fitting must provide additional 1" wide area beyond duct core for application of tape or *externally-applied* mastic.
  - Metallic core shall be secured to the fitting with:
    - a stainless steel worm drive clamp, or
    - #8 or larger sheet metal screws equally spaced and positioned at least 1/2" from end of core (3 screws for duct diameters under 12", and 5 screws for diameters 12" and larger).
- Sealing Methods
  - All Closure Systems
    - Materials and application shall be in compliance with Item 24.
  - Mastic and Fiberglass Mesh Tape
    - Mastic and mesh shall be installed as prescribed in Item 25.
  - Pressure Sensitive Tapes
    - Tape shall be installed in compliance with Item 26.
  - Aerosol-Applied Sealants
    - Aerosol sealants shall be applied in compliance with Item 29.

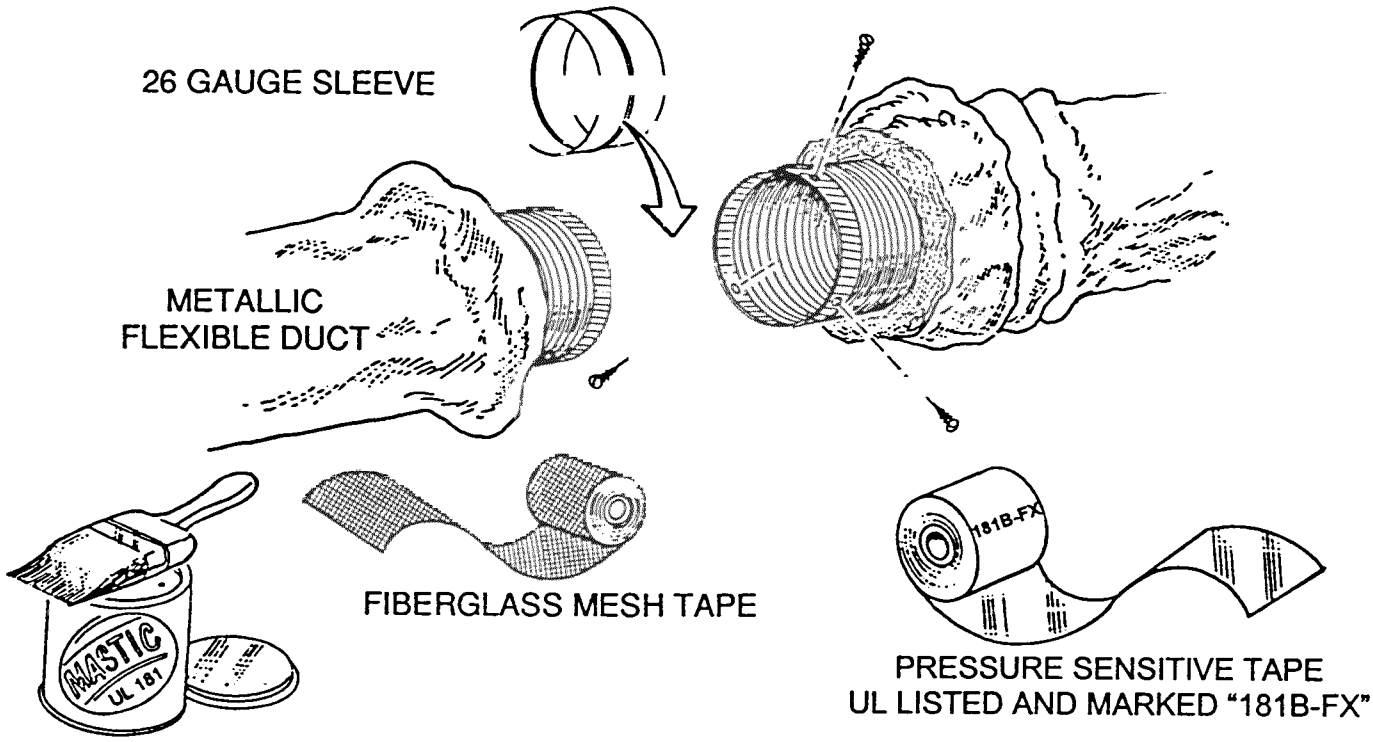

© PG&E • 5/7/99 (Rev. 9/15/00)

31. REPAIRING AND SEALING FLEXIBLE METALLIC DUCTS (continued)

- Insulation and Vapor Barrier
  - Insulation shall completely cover the duct core and fitting.
  - The vapor barrier (jacket) shall be pulled back over the insulation
    - Where two pieces of duct are joined (splices), the two jackets shall overlap at least 2".
    - Vapor barrier shall be secured/sealed with a drawband and/or three *staggered* wraps of pressure sensitive tape.
- Core Repairs
  - Holes/damage in the duct core shall be repaired by removal of the damaged section and insertion of a sleeve/coupling.
- Jacket Repairs
  - Rips and holes in the vapor barrier shall be repaired with pressure sensitive tape or mastic and mesh tape.

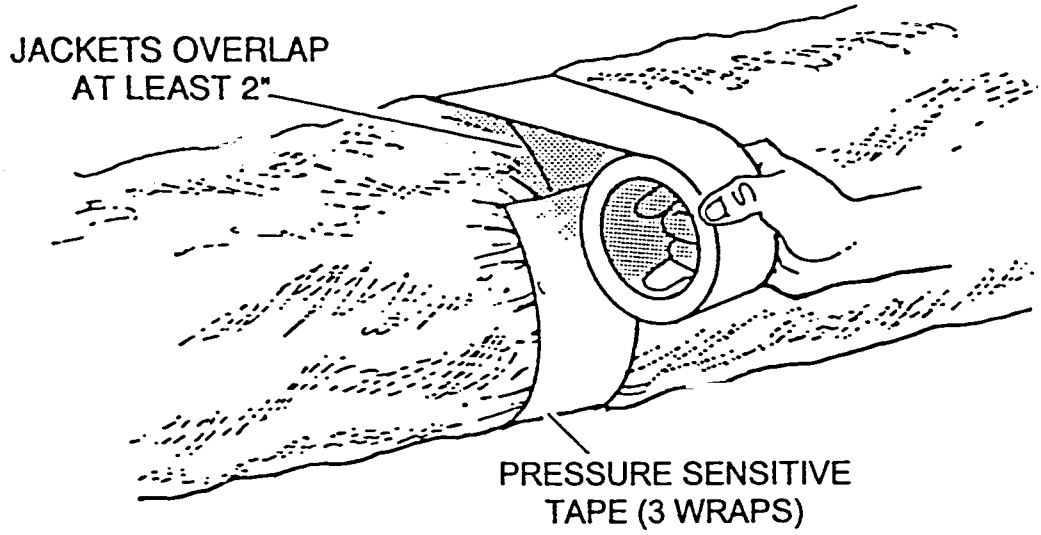

© PG&E • 5/7/99 (Rev. 9/15/00)

32. REPAIRING AND SEALING RIGID METAL DUCTS

- Joint Overlap (Contact Lap)
  - When two rigid components are joined (e.g., duct and starting collar, or two pieces of duct), they shall overlap at least 1-1/2".
- Mechanical Fasteners
  - Connections shall be secured with #8 or larger sheet metal screws equally spaced, or an equivalent fastening method.
  - Round Ducts
    - At least 3 screws for duct diameters up to 12", and 5 screws for larger diameters.
  - Rectangular Ducts
    - At least 1 screw per side.
  - Lapped Seams (e.g., field fabricated metal plenums, etc.)
    - Overlapped surfaces shall:
      - be in substantial contact with each other along the entire seam.
      - be securely fastened together (e.g., with #8 or larger sheet metal screws at intervals of 12" or less).

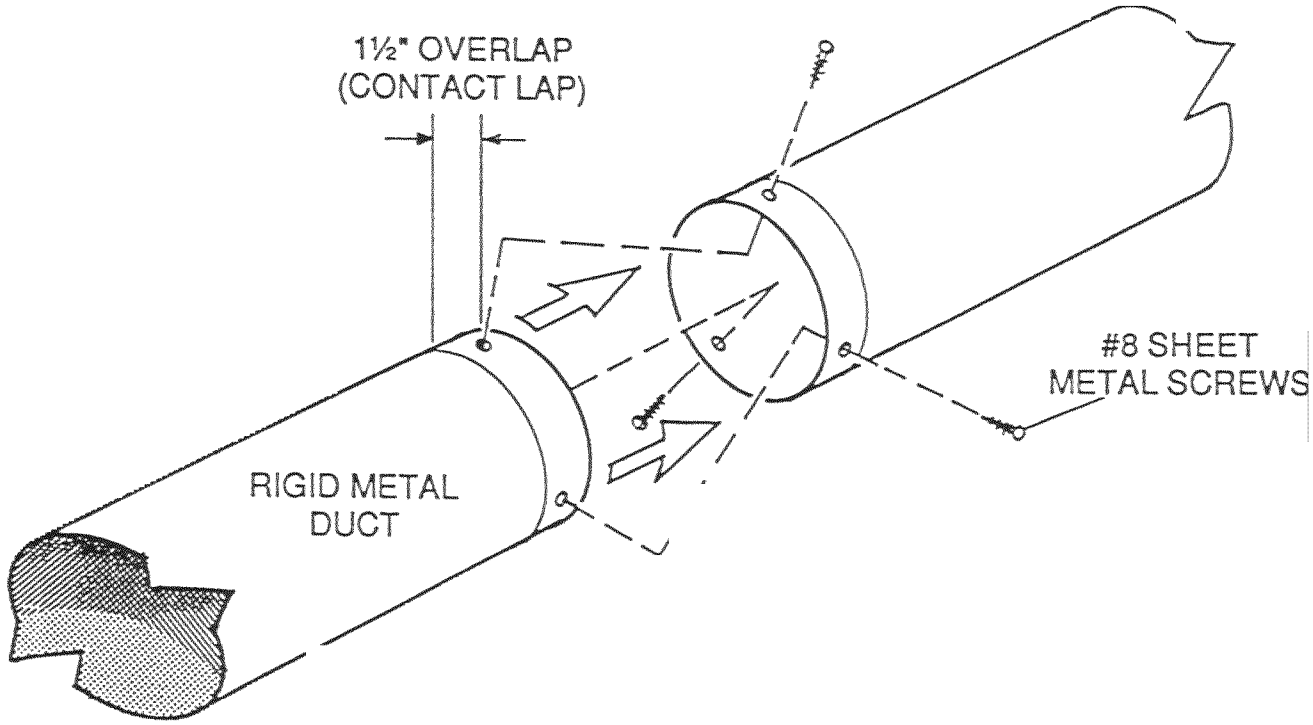

© PG&E • 5/7/99

32. REPAIRING AND SEALING RIGID METAL DUCTS (continued)

- Gaps 1/8" or smaller may be sealed with:
  - duct mastic alone, or
  - pressure sensitive tape, or
  - aerosol-applied sealant.
- Gaps larger than 1/8" shall be sealed with:
  - duct mastic embedded with fiberglass mesh, or
  - pressure sensitive tape (shall be applied in combination with mastic for gaps greater than 1/4"), or
  - aerosol-applied sealant (gaps up to 1/4" wide maximum).
- Sealing Methods
  - All Closure Systems
    - Materials and application shall be in compliance with Item 24.
  - Mastic and Fiberglass Mesh Tape
    - Mastic and mesh shall be installed as prescribed in Item 25.
  - Pressure Sensitive Tapes
    - Tape shall be installed in compliance with Item 26.
  - Aerosol-Applied Sealants
    - Aerosol sealants shall be applied in compliance with Item 29.

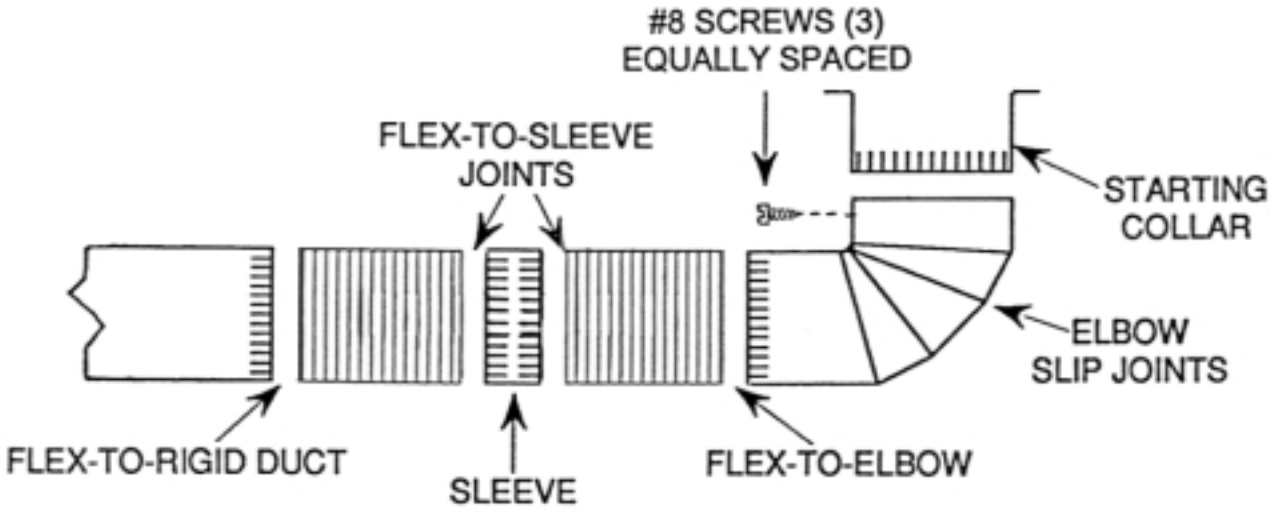

- MASTIC ALONE ON ELBOW SLIP JOINTS & OTHER GAPS UP TO 1/8"
- MASTIC & MESH, OR PRESSURE SENSITIVE TAPE, ON GAPS OVER 1/8"

© PG&E • 5/7/99

33. REPAIRING AND SEALING RIGID FIBERGLASS DUCTS

- All Joints
  - Closure (Repair and Sealing) Materials
    - Mastic
      - UL listed and labeled "181A-M", reinforced with 3" wide fiberglass mesh tape.
    - Pressure sensitive tape
      - UL listed and marked "181A-P".
  - Externally-Applied Closure Systems
    - Required on all joints and seams.
    - Materials shall be centered over the joint/seam and provide a minimum 1" overlap onto joined surfaces.
  - Aerosol-Applied Sealants
    - May be used to seal gaps up to 1/4" wide (e.g., small holes in the duct board or leaks in existing joint/seam closure system).
    - May <u>not</u> be used in place of externally-applied tape or mastic-plus-mesh as a joint/seam closure system.

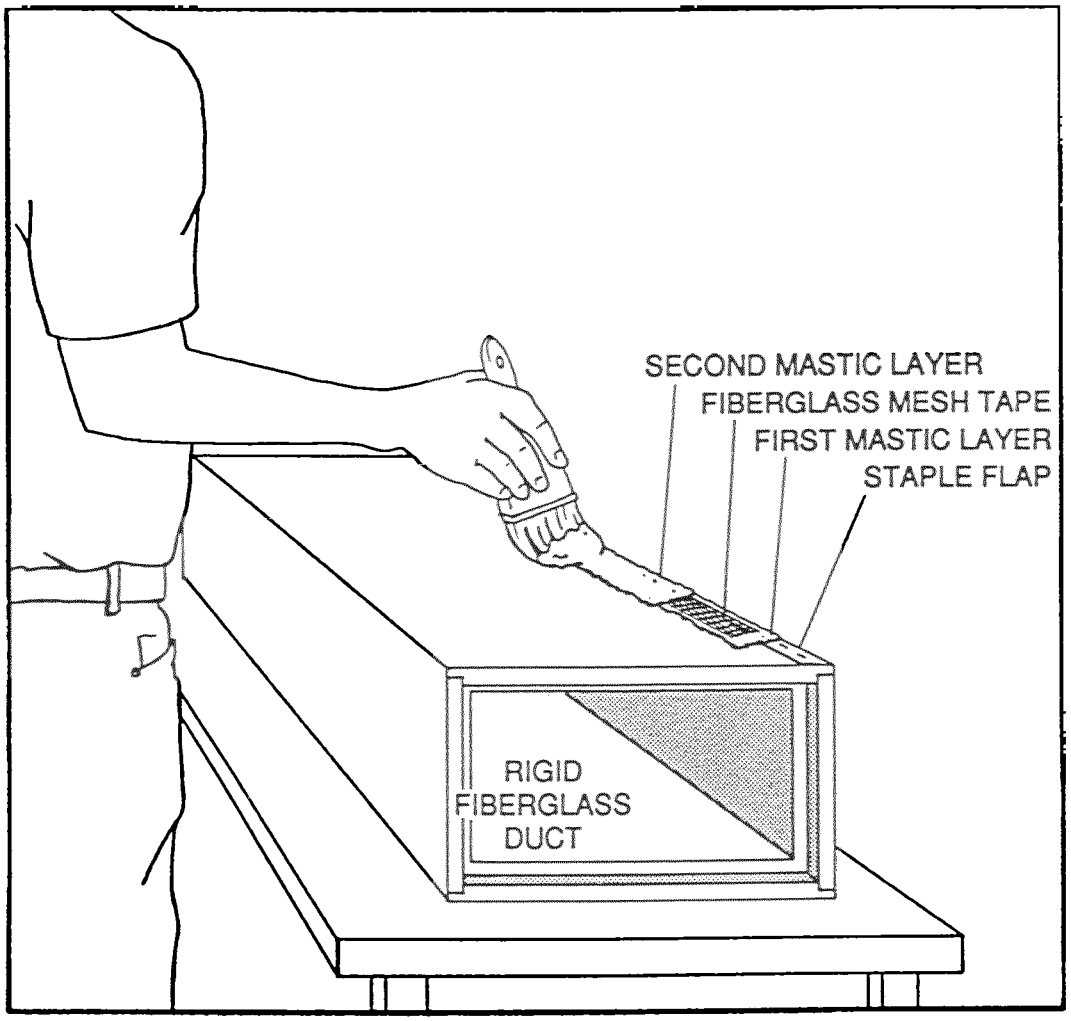

© PG&E • 5/7/99

33. REPAIRING AND SEALING RIGID FIBERGLASS DUCTS (continued)

- Shiplap Joints
  - Before sealing material is applied, joint shall be closed with outward-clinching staples installed through the stapling flap of the jacketing material.
  - Staples shall be minimum 1/2" long, and spaced 2" OC maximum
- Butt Joints
  - When stapling flap is <u>not</u> present:
    - Cross tabs of closure tape:
      - shall be equally spaced on each side of the joint, minimum one cross tab per side.
      - shall be minimum 8" long and spaced maximum 12" OC.
      - may be placed either under or over closure tape.
- Starting Collars
  - Starting collar shall be securely installed and sealed with mastic.
  - Duct shall be mechanically attached (e.g., with sheet metal angle brackets, #10 screws and 2-1/2" square steel washers), and sealed.

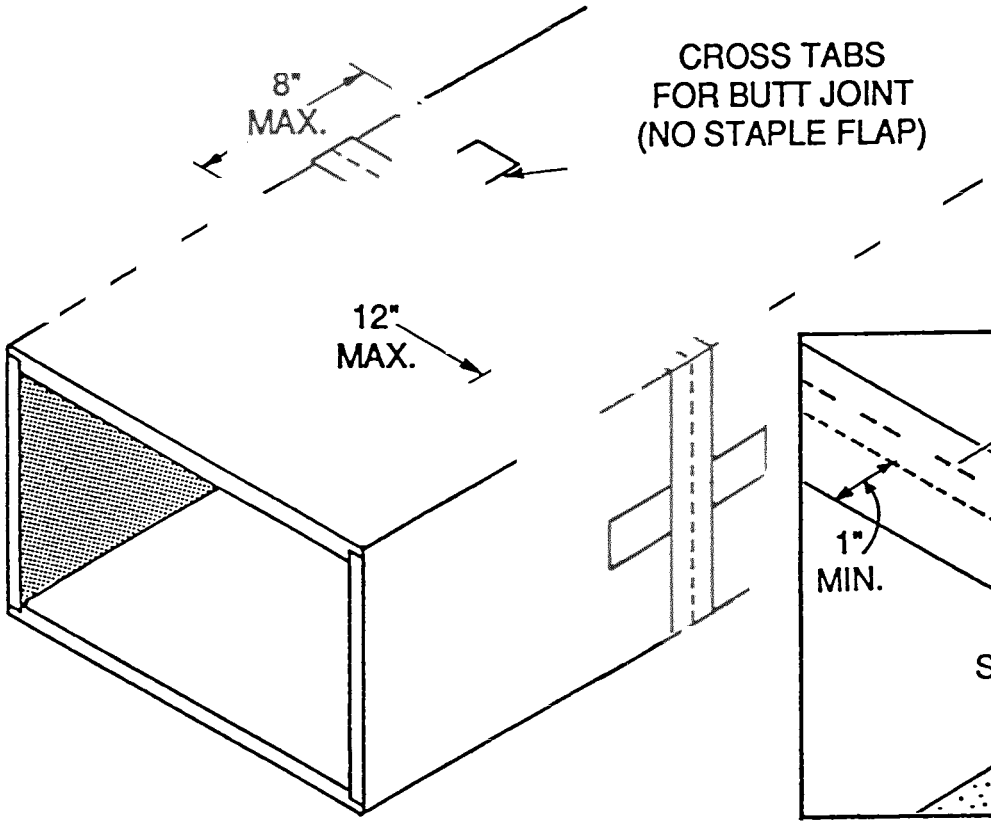

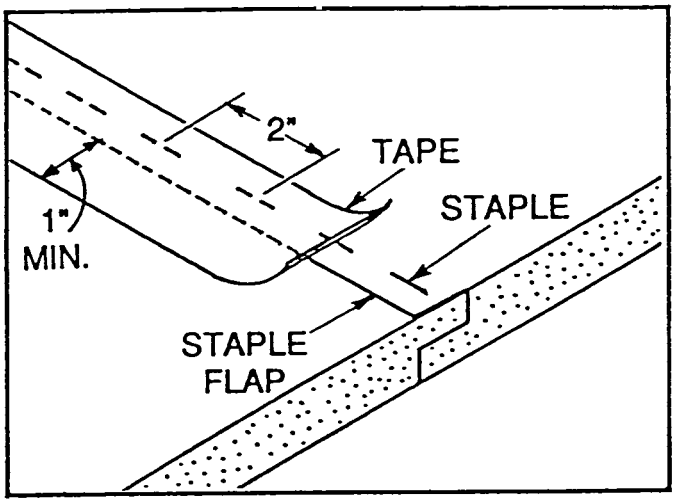

SHIP LAP JOINT WITH STAPLE FLAP

© PG&E • 5/7/99

33. SEALING RIGID FIBERGLASS DUCTS (continued)

- Pressure Sensitive Tape
  - Closure tape shall be rubbed firmly with a plastic squeegee until the facing reinforcement shows through (without causing staples to puncture the tape).
  - In temperatures below 50°F, tape and duct board shall be conditioned per UMC standards.
- Heat Activated Tape
  - Heat and pressure shall be applied per manufacturer's instructions until heat indicator dots have darkened on all tape surfaces.

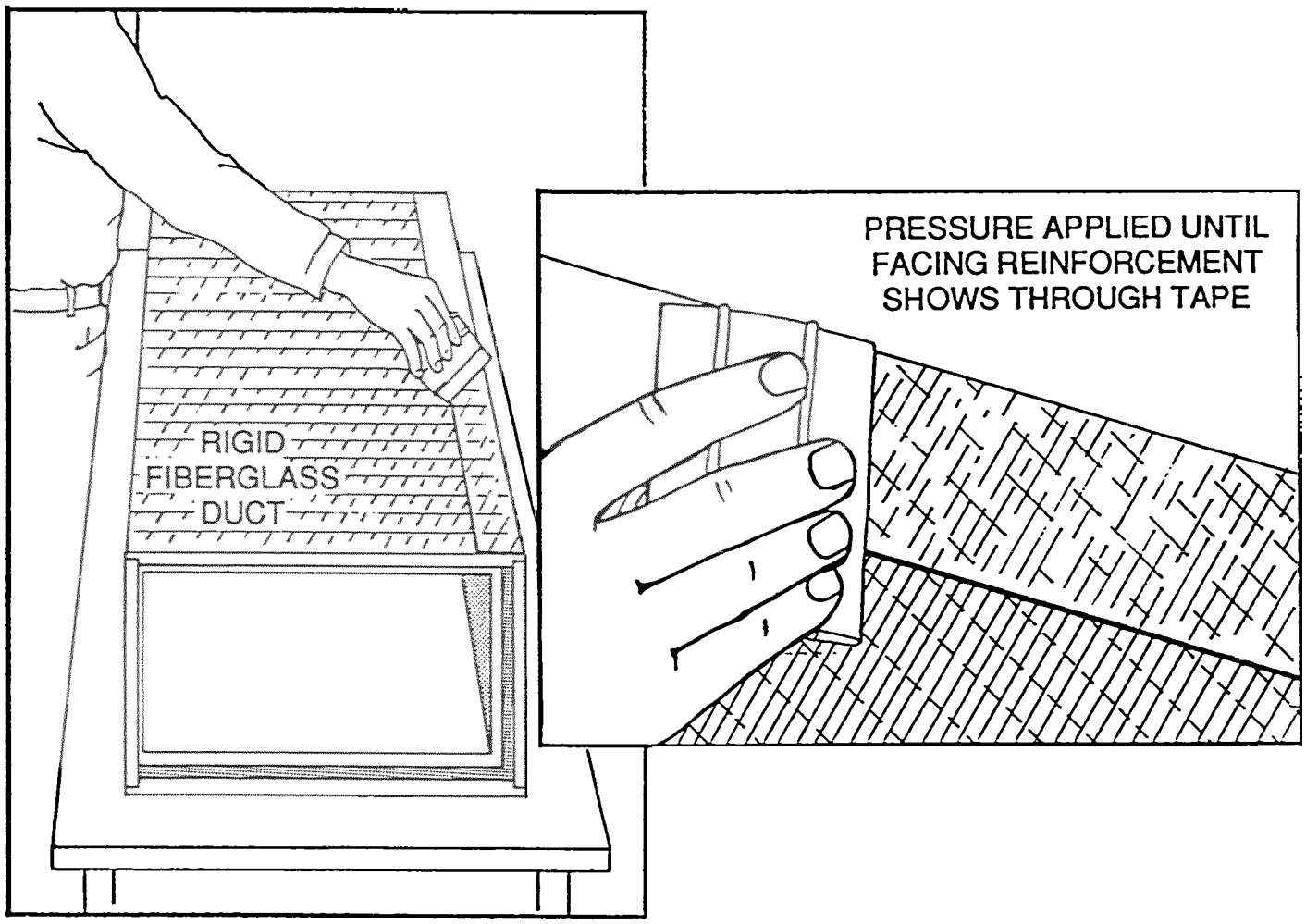

© PG&E • 5/7/99

33 SEALING RIGID FIBERGLASS DUCTS (continued)

- Mastic Reinforced with Fiberglass Mesh Tape
  - Mesh fabric shall be imbedded between two layers of duct mastic.
    - A thin layer of mastic at least 3-1/2" wide shall be centered over the joint seam.
    - Mesh fabric shall be:
      - pressed into the mastic.
      - applied at least one layer thick, overlapping itself when encircling a transverse joint.
    - A second layer of mastic shall be installed over the mesh, filling the scrim pattern completely.

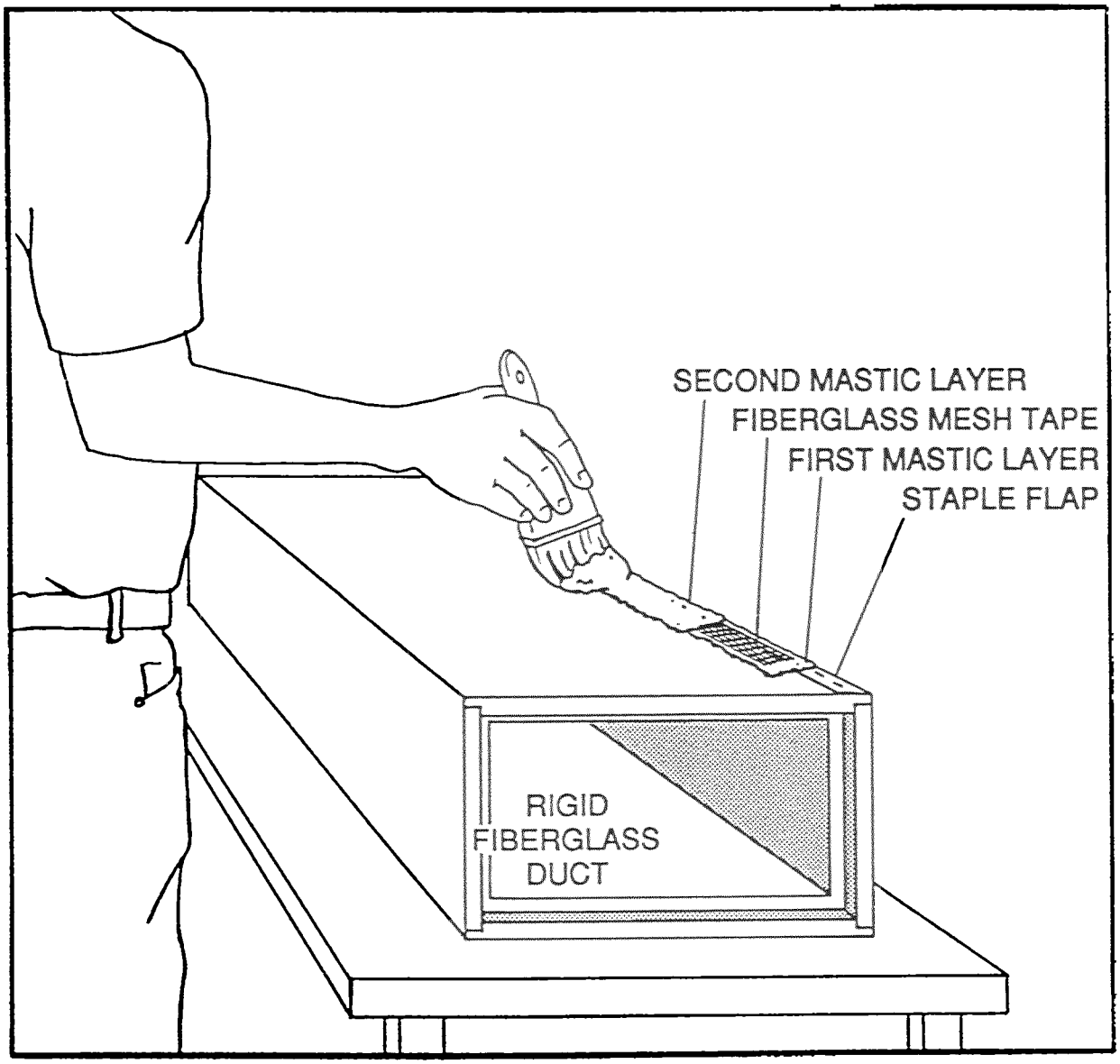

© PG&E • 5/7/99

34. SEALING BUILDING CAVITIES

- *Accessible* leaks shall be sealed in existing building cavities being used as ducts (*e.g.*, platform return, *panned joists, building cavity/chase, cabinet toe-kick supply terminal,* etc.).
- Repair materials/liner may include sheet metal, fiberglass duct board, and gypsum.
- Sealants may include:
  - Duct mastic alone (gaps up to 1/8").
  - Duct mastic plus fiberglass mesh tape (gaps larger than 1/8").
  - Approved caulk (e.g., elastomeric sealants).
  - *Metallic* pressure sensitive tape (metal and foil surfaces).
  - Aerosol-applied sealants (gaps up to 1/4" wide).
- Foam board and foam sealants shall <u>not</u> be used.
- Platform shall be insulated (e.g., stud cavities filled with flexible insulation) when liner is not fiberglass duct board.

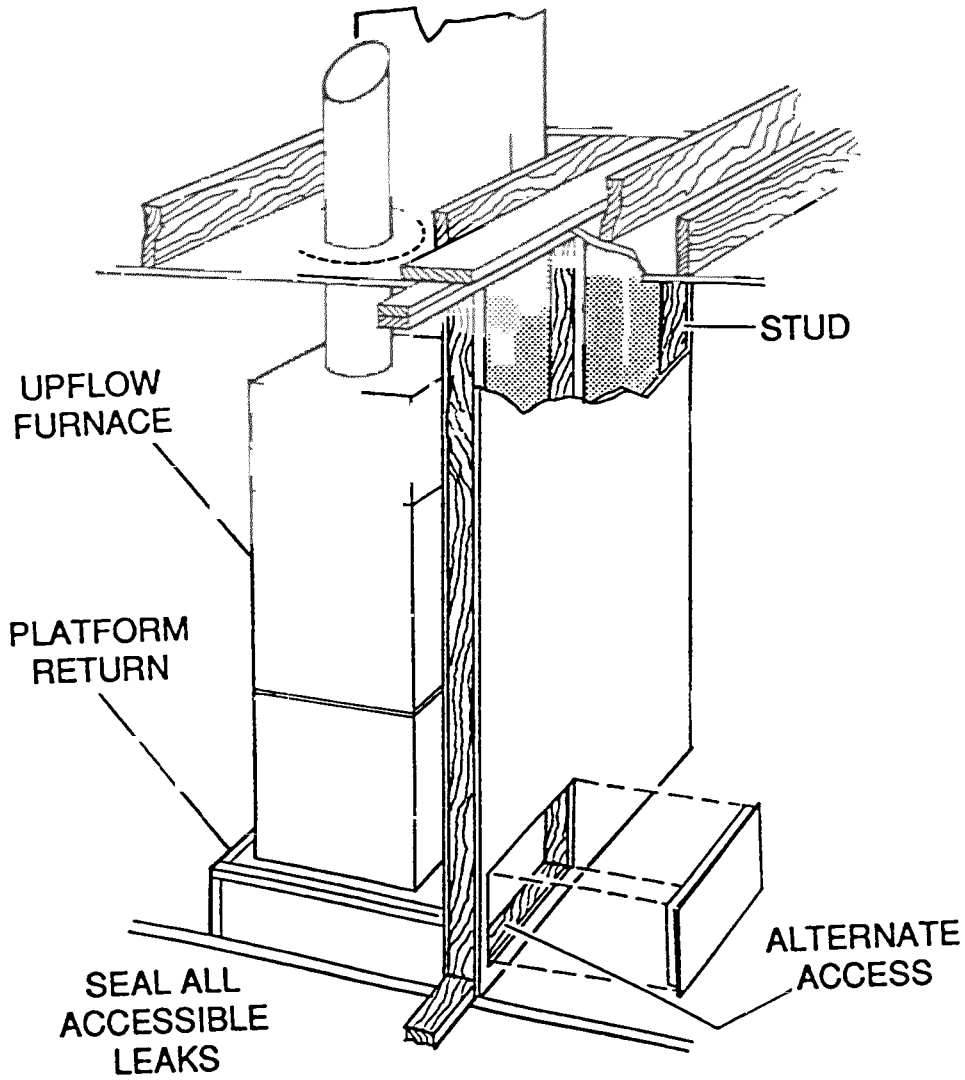

© PG&E • 5/7/99 (Rev. 9/15/00)

35. CRAWL SPACE PLENUMS

- New Duct Systems
  - The crawl space shall <u>not</u> be used as a plenum.
- Existing Crawlspace Plenum
  - The existing crawl space plenum shall be abandoned and replaced with a sealed air duct system.
  - Foundation vents shall be provided in conformance with local code when required.
  - Abandoned register holes shall be permanently closed off and sealed.

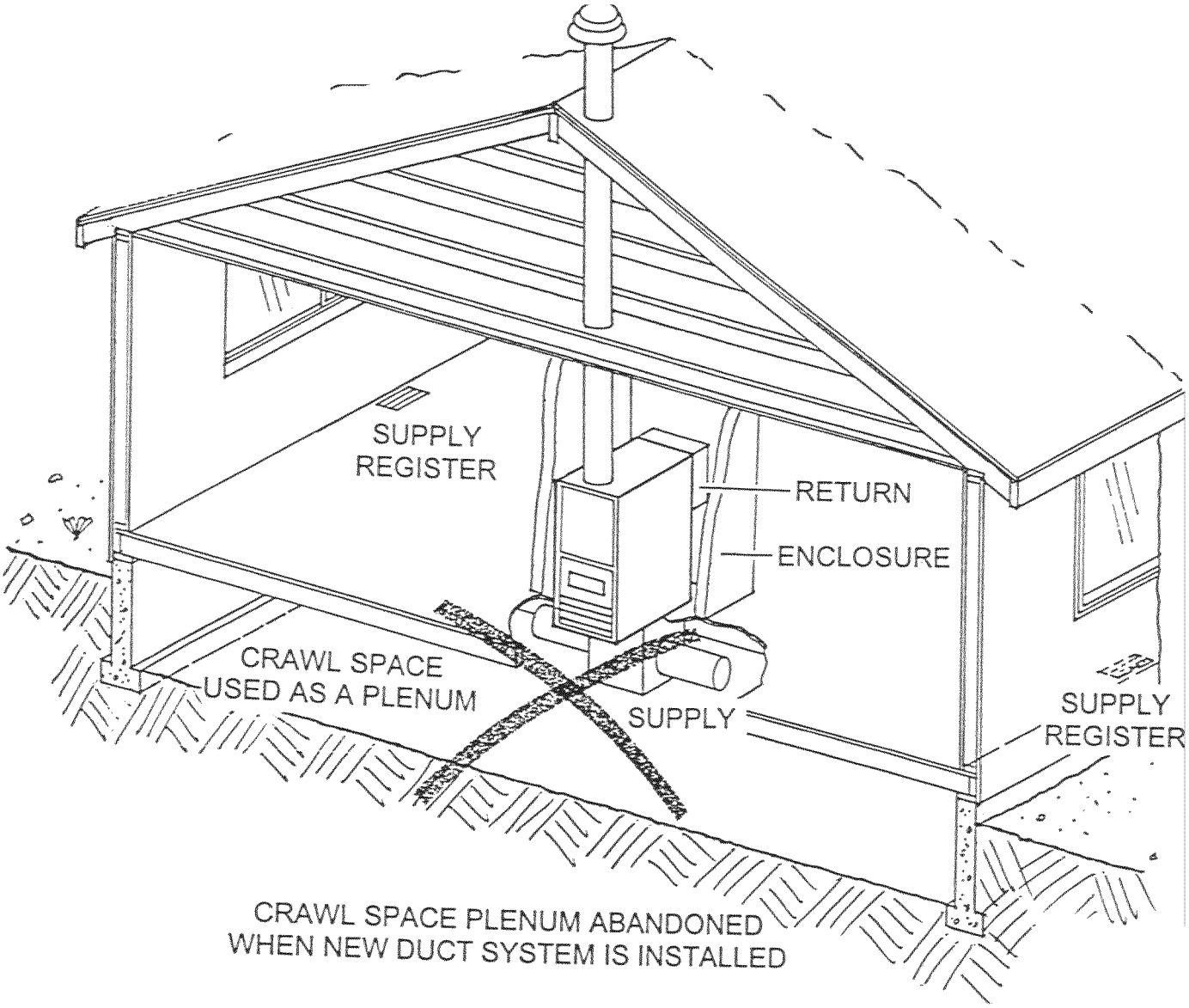

© PG&E • 5/7/99

36. SEALING REGISTER BOOTS

- Boot-to-Duct Connection
  - All Closure Systems
    - Materials and application shall be in compliance with Item 24.
  - Mastic and Fiberglass Mesh Tape
    - Mastic and mesh shall be installed as prescribed in Item 25.
  - Pressure Sensitive Tapes
    - Tape shall be installed in compliance with Item 26.
  - Aerosol-Applied Sealants
    - Aerosol sealants shall be applied in compliance with Item 29.
- Leaks in the Boot
  - Leaks shall be sealed with one of the following:
    - Duct mastic alone (gaps up to 1/8").
    - Mastic plus mesh tape (gaps greater than 1/8").
    - Pressure sensitive tape (in combination with duct mastic on gaps over 1/4").
    - Elastomeric caulk (gaps up to 3/8").
    - Aerosol-applied sealants (gaps up to 1/4").
  - Boot sealing material shall <u>not</u> interfere with removal or reinstallation of register.

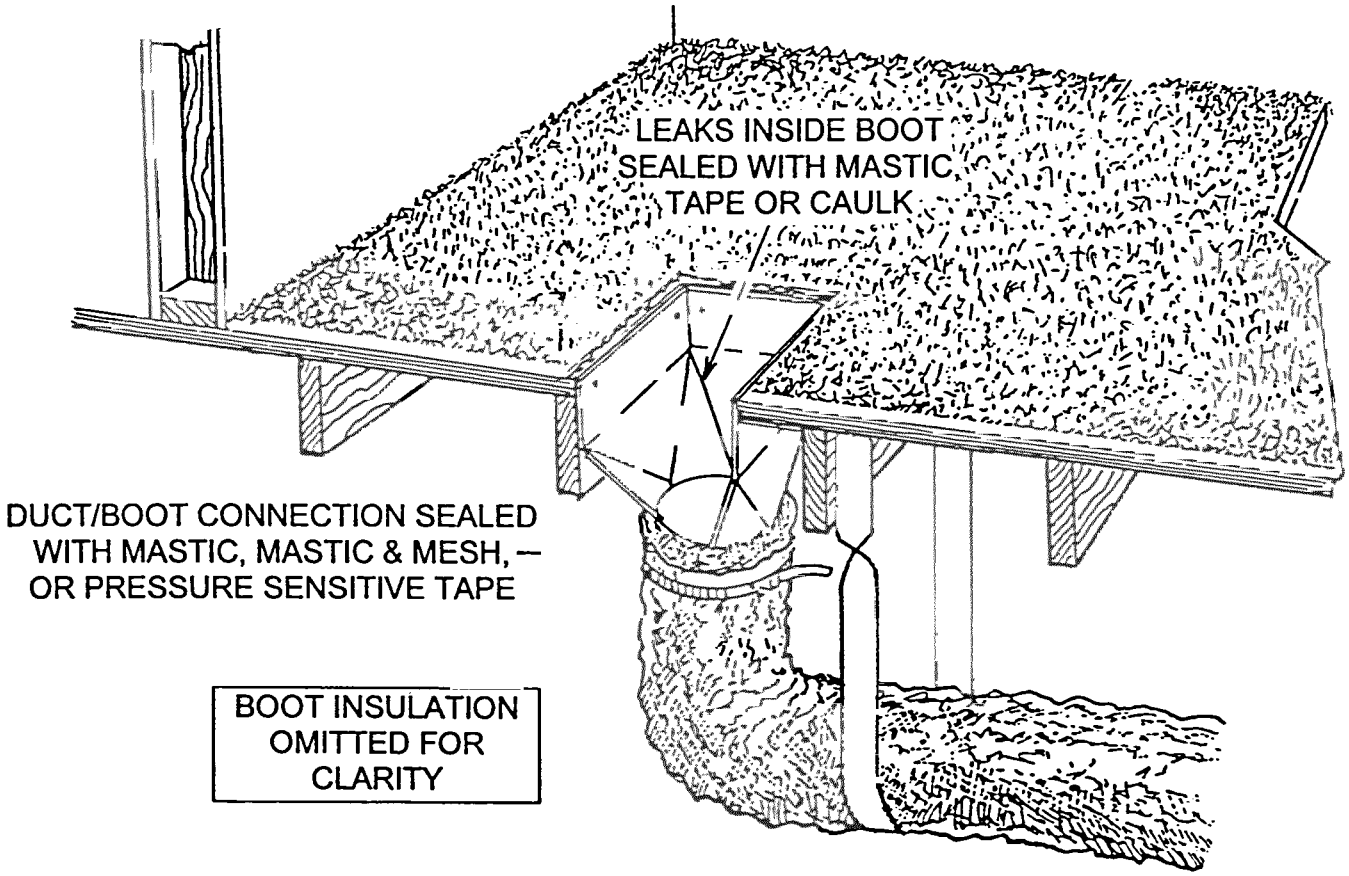

© PG&E • 5/7/99

36. SEALING REGISTER BOOTS (continued)

- **Boot-to-Floor/Wall/Ceiling Connection**
  - **Boot shall be mechanically secured to the structure and shall <u>not</u> rely on the duct for support or stability.**
  - **Gaps between boot and surrounding material shall be sealed with one of the following:**
    - **Elastomeric caulk (gaps up to 3/8").**
    - **Elastomeric caulk supported by backer rod (gaps 7/16" to 5/8")**
    - **Duct mastic (gaps up to 1/8").**
    - **Duct mastic reinforced with fiberglass (gaps over 1/8").**
  - **Exposed sealant that will interfere with register reinstallation or removal may be covered with pressure sensitive tape.**
  - **Pressure sensitive tape may be used to seal gaps up to 1/4" where caulk/mastic would interfere with reinstallation and removal of the register.**

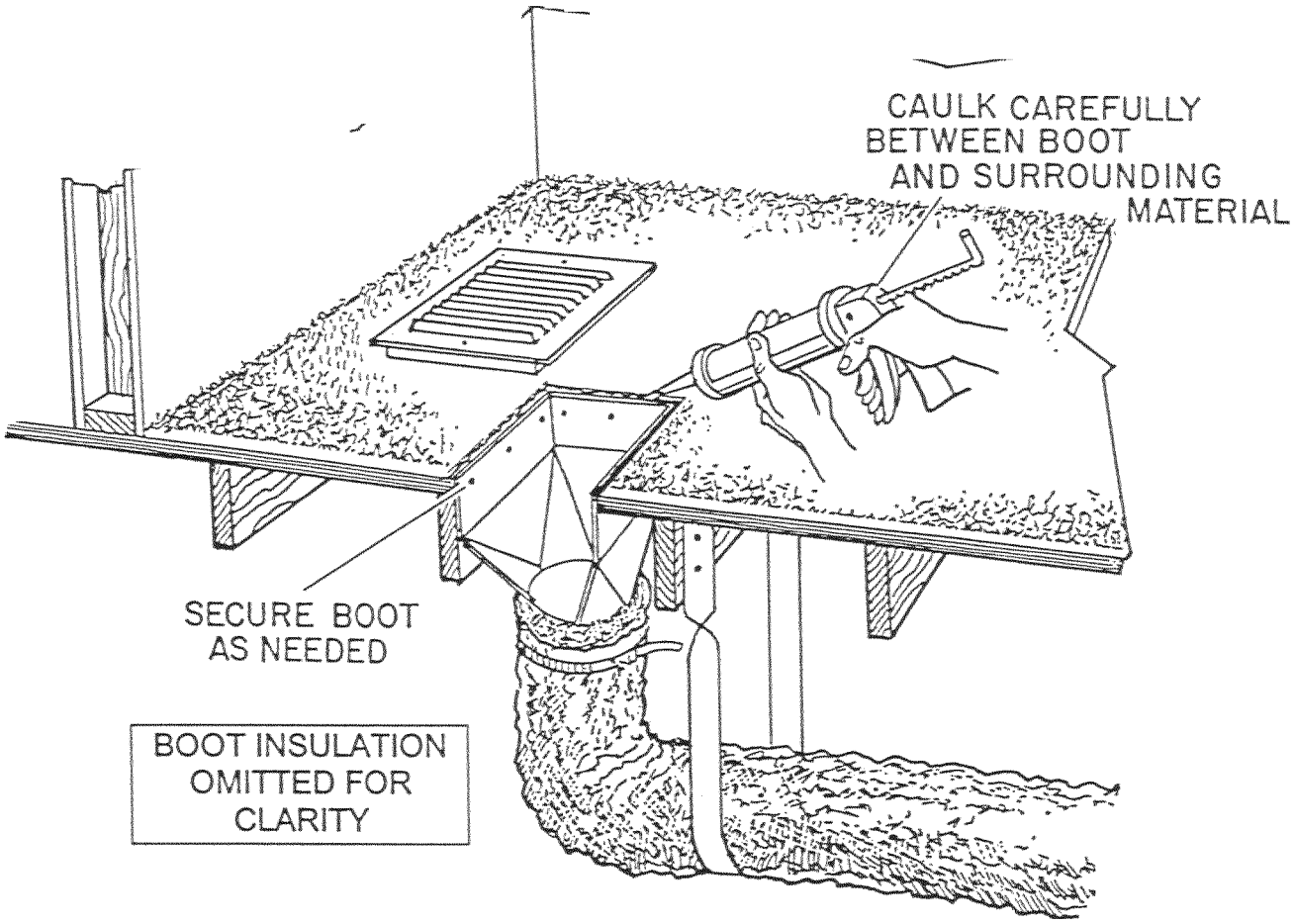

© PG&E • 5/7/99

37 DUCT INSULATION

- Material
  - Flexible or rigid fiberglass.
  - ~~Selected and installed per ASTM C971-82.~~
  - R-4.2 minimum, or as prescribed by local code and the Program Policy & Procedures.
- Coverage
  - All air ducts, air connectors, plenums, distribution boxes and system components shall be insulated.
    - Insulation is to be installed on portions of the duct system located outside of conditioned space.
    - Rigid metal ducts located entirely within conditioned space may be insulated to prevent condensation.
  - 100% coverage required without gaps or openings.
- Compression
  - Maximum 20% overall compression by attachments.
  - Maximum 50% compression in corners/bends.

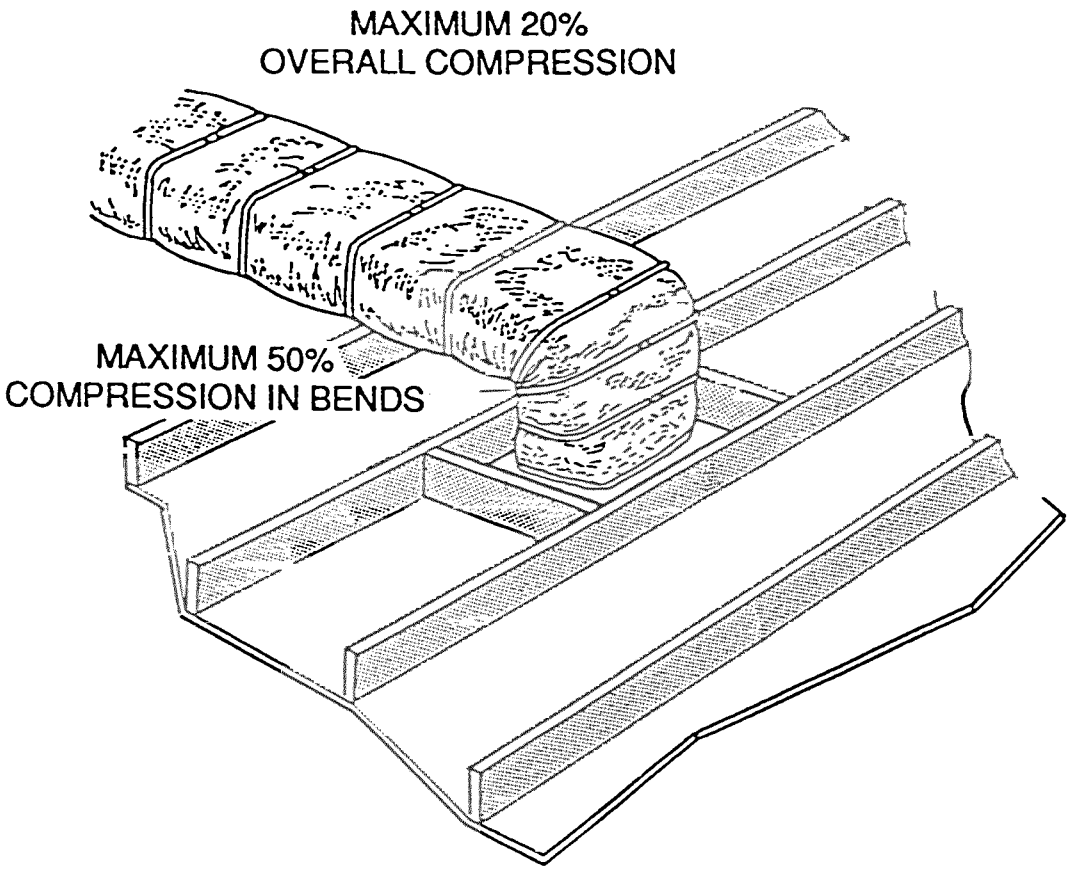

© PG&E • 5/7/99 (Rev. 9/15/00)

37. DUCT INSULATION (continued)

- Clearances
  - Combustion air vents shall <u>not</u> be obstructed by duct insulation.
  - Combustible Facings and Attachments
    - 6" clearance from single wall gas flue/vent pipes.
    - 1" clearance *<u>or</u> clearance specified by the listing, whichever is greater, for listed* Type B double-wall gas vent pipes.
    - 3" clearance from all other heat producing devices.
- Attachment of Rigid Fiberglass Insulation
  - Insulation shall be securely attached (e.g., with stickpins).
  - Seams shall be sealed with:
    - pressure sensitive tape marked "181A-P", or
    - heat activated tape marked "181A-H", or
    - duct mastic labeled "181A-M" reinforced with mesh tape.

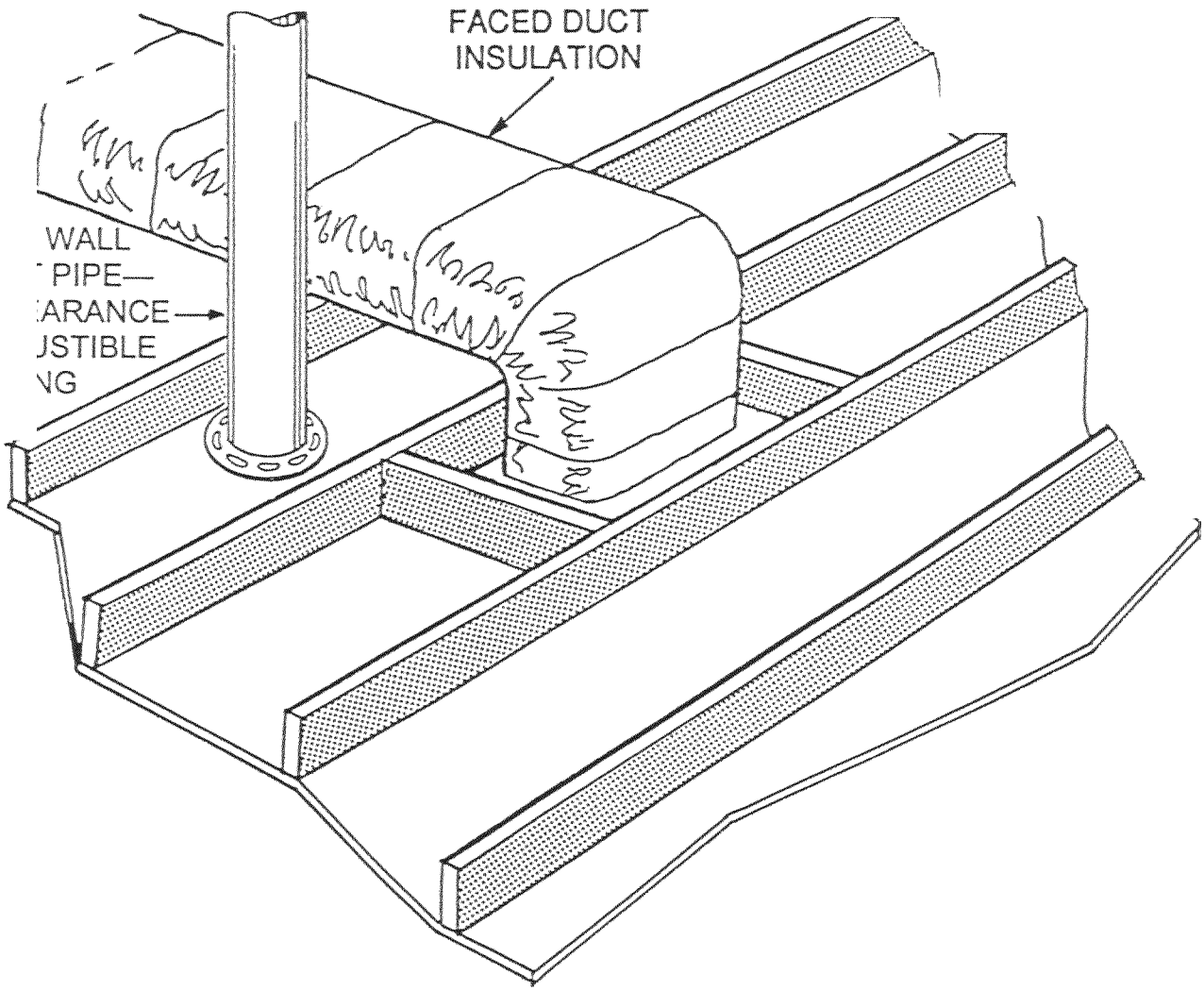

© PG&E • 5/7/99 (Rev. 9/15/00)

37. DUCT INSULATION (continued)

- Installation of Flexible Insulation
  - Insulation shall be permanently secured with one of the following:
    - Drawbands (duct ties).
    - Noncorrosive wire, 20 gage minimum.
    - Rust-resistant nails or staples.
    - Pressure sensitive tape (e.g., metallic or FSK) wrapped a minimum of 3 times around the circumference.
  - Spirally Wrapped
    - Wraps of unfaced insulation shall overlap each other at least 2".
    - Insulation shall be mechanically secured as needed to prevent gaps or openings.
  - Parallel Wrapped
    - Faced wraps shall be secured and sealed with pressure sensitive tape or as prescribed by manufacturer.
    - Unfaced wraps shall be mechanically secured with fasteners (drawbands, wire, nails, or staples) installed no more than 18" apart along the lengthwise seam (overlap) of the insulation.

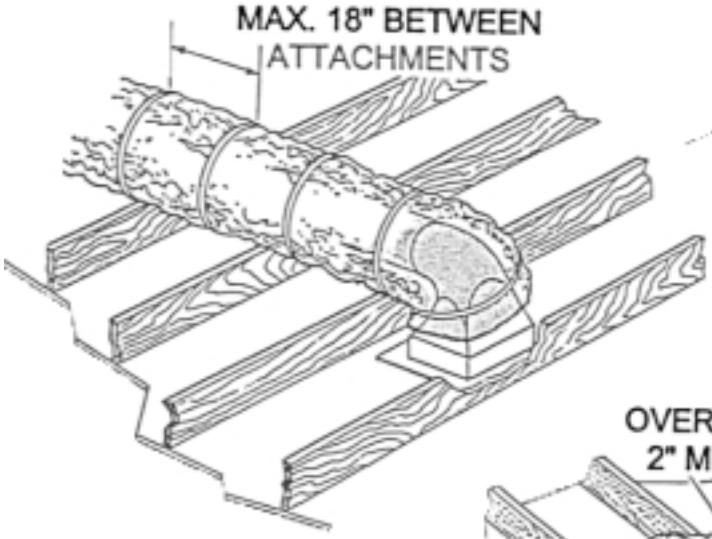

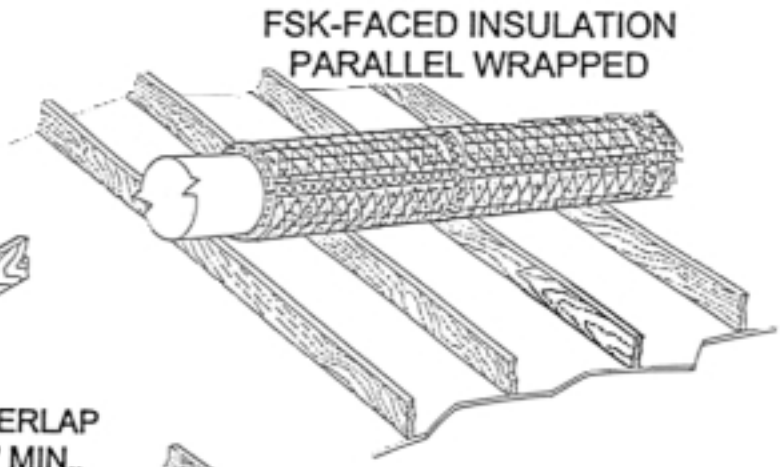

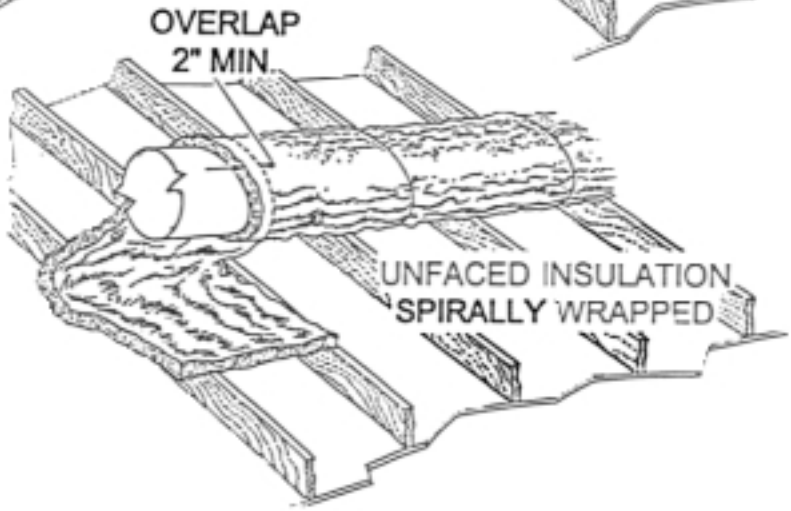

© PG&E • 5/7/99

37. DUCT INSULATION (continued)

- Vapor Barrier (Jacket)
  - Shall be installed when required by local code.
  - When installed, vapor barrier shall be placed on outermost side of the insulation.
- Flexible Ducts
  - Jacket Splices
    - When two jacket ends are joined together, they shall overlap at least 2".
    - Overlap shall be secured/sealed with a drawband and/or 3 *staggered* wraps of pressure sensitive tape.
  - Duct Termination
    - Jacket shall be pulled over insulation and secured/sealed to fitting with one or more of the following:
      - A drawband.
      - 3 wraps of pressure sensitive tape.
      - Mastic and mesh tape.

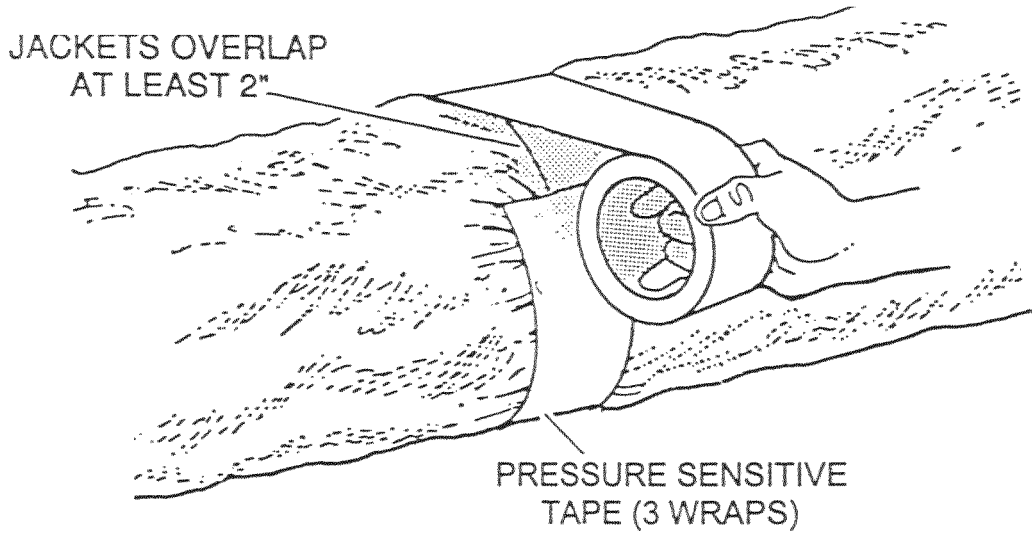

© PG&E • 5/7/99 (Rev. 9/15/00)

37. DUCT INSULATION (continued)

- Exposed Ducts
  - Ducts Located Outdoors or Not Protected from the Elements
    - Ducts shall be insulated with materials which are:
      - intended for exterior applications.
      - selected and installed in conformance with manufacturer's instructions and local codes.
  - Ducts Located in Area Subject to Human Contact
    - When fiberglass insulation is installed, it shall be faced.
    - Fiberglass edges shall <u>not</u> be left exposed.

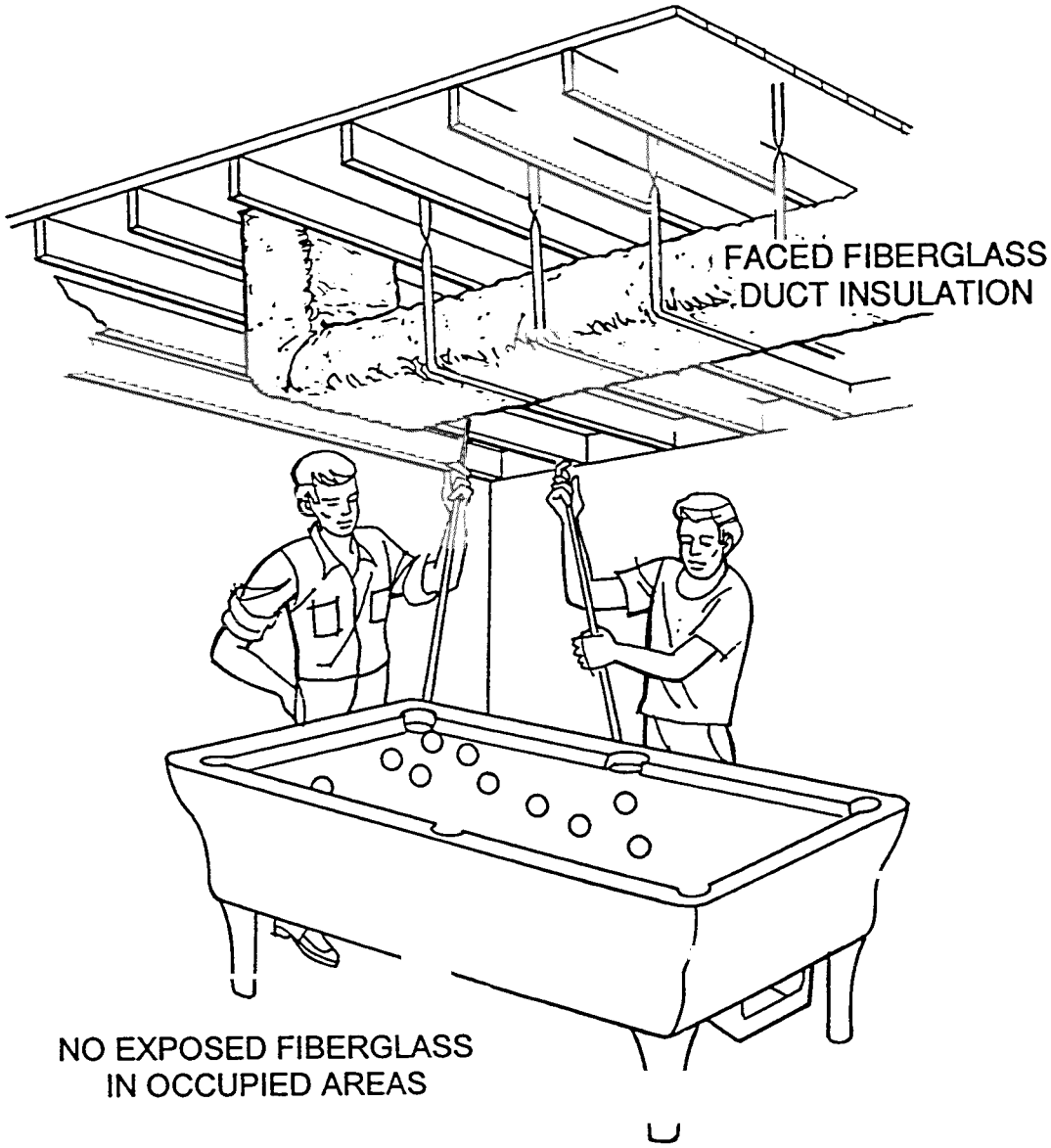

© PG&E • 5/7/99

NONFEASIBILITY CRITERIA FOR DUCT TESTING AND SEALING STANDARDS

A. SAFETY-RELATED

1 Any work that would disturb asbestos or other hazardous material.

2. Combustion-related hazard exists with furnace or other fuel burning appliance (e.g., excessive CO, cracked heat exchanger, backdrafting etc.)

3 Presence of a health or safety hazard, such as sewage waste in the crawlspace, insect infestation, hazardous electrical wiring, or a structural hazard.

B. OTHER

- See Program P&P.

© PG&E • 5/7/99