CALIFORNIA
ENERGY
COMMISSION

Appendices to:
ALTERNATIVE CALCULATION METHOD APPROVAL MANUAL
for the 2001 Energy Efficiency Standards for Nonresidential Buildings

Adopted by Commission
April 4, 2001

COMMISSION APPROVED MANUAL

April 5, 2001
P400-01-011A

Gray Davis, *Governor*

CALIFORNIA ENERGY COMMISSION

EFFICIENCY COMMITTEE

Robert Pernell
Presiding Member

Arthur H. Rosenfeld
Second Member

William Pennington
Project Manager

Scott Matthews
Deputy Director
ENERGY EFFICIENCY DIVISION

Steve Larson,
Executive Director

California Energy Commission
Assembly Bill 970 Building Energy Efficiency Standards

Appendices to:
AB 970 Nonresidential Alternative Calculation Method
Approval Manual

Energy Commission Publication No. P 400-01-003A

These Appendices to the AB 970 Nonresidential Energy Calculation Method Approval Manual include computer programming details that computer programs used to determine compliance with the 2001 AB 970 Energy Efficiency Standards for Nonresidential Buildings must meet. These Appendices are part of the AB 970 Nonresidential Alternative Calculation Method Approval Manual adopted at the Energy Commission's January 3, 2001 Business Meeting. They are used in conjunction with the Title 24 Building Energy Efficiency Standards (California Code of Regulations, Title 24, Part 6 and the Administrative Regulations, Title 24, Part 1.)

These appendices were prepared by California Energy Commission staff. Neither the State of California, the California Energy Commission, nor any of their employees, contractors, or subcontractors, makes any warranty, expressed or implied, or assumes any legal liability or responsibility for the accuracy, completeness, or usefulness of any information, apparatus, product, or process enclosed, or represents that its use would not infringe on privately-owned rights.

January 22, 2001

Appendix A:

Nonresidential ACM Approval Application

Appendix A: Nonresidential ACM Approval Application

Appendix A: Application For Approval

CALIFORNIA ENERGY RESOURCES
CONSERVATION AND DEVELOPMENT COMMISSION

APPLICATION FOR APPROVAL OF A VENDOR-CERTIFIED ALTERNATIVE CALCULATION METHOD FOR USE IN DEMONSTRATING COMPLIANCE WITH THE NONRESIDENTIAL BUILDING ENERGY EFFICIENCY STANDARDS PER SECTION 141, TITLE 24 OF THE CALIFORNIA CODE OF REGULATIONS

Part I: General Information

1. Organization filing application:

Name: _____ Phone: ( )_____
Address:_____
_____

2. Name of person responsible for completion of this application:

Name: _____ Phone: ( )_____
Address:_____
_____

3. Name, Date, and Version of the Alternative Calculation Method (ACM):

Name: _____ Date: _____
Version: _____

4. Has a previous version of this ACM ever been certified?

[ ] YES [ ] NO

5. Has this ACM been previously submitted for approval or certification?

[ ] YES [ ] NO

6. Has this ACM ever been used to analyze the energy use of a building in California?

[ ] YES [ ] NO

7. Has this ACM ever been used to determine compiance with the energy efficiency standards of California?

[ ] YES [ ] NO

VENDOR CERTIFICATION OF ALTERNATIVE CALCULATION METHOD

I/We,_____ , certify that the alternative calculation method (ACM), herein
name(s)

designated _____ ,version _____ , dated_____,
name of alternative calculation method version last saved update

occupying_____ bytes of memory, conforms to all of the requirements specified for an
exact memory size in bytes

ACM for Commission approval listed in the Nonresidential ACM Approval Manual. I/We specifically certify that this ACM sucessfully conforms to the test criteria for each and every ACM capability test in Chapter 4 of the Alternative Calculation Method (ACM) Approval Manual for the Nonresidential building energy efficiency standards. Moreover, I/we certify that, to the best of my/our knowledge and belief, we have found no instances where this ACM would indicate compliance for a proposed building that the reference computer program using the the reference method would indicate fails to comply with the building energy efficiency standards.

I/We also understand that all required inputs must be available in any approvable ACM but the ACM is not required to model the features described by a given set of inputs. I/We stipulate that this ACM gives the user access to the required inputs and that this ACM automatically warns the user when building inputs use features that the ACM cannot model with sufficient accuracy and automatically fails the proposed building by a margin sufficient to meet the test criteria for any test of that capability.

Signed: Date:

_____ _____

_____ _____

ACM Application Test Results
for
Required Capabilities Tests

TEST	PTa	STa	DTa	PTr	STr	DTr	CR1	CR2	LITEr	RECPr	CR3	CR4
A11A09												
A12A09												
A13A09												
A21B13												
A22B13												
A23B06												
A24B16												
A25B03												
A26B13												
A27B16												
B11B13												
B12B13												
B13B13												
B14B06												
B15B16												
B21B12												
B22B12												
B23B12												

DTi = PTi - STi where i is either ‘a’ for acm or ‘r’ for reference

CR1 = DTa - (0.85 × DTr - 1) > 0 when DTa ≥ 0

CR2 = DTa - (1.15 × DTr - 1) > 0 when DTa < 0

CR3 = LITEa/LITEr must be ≥ 0.980 and ≤ 1.020

CR4 = RECPa/RECPr must be ≥ 0.980 and ≤ 1.020

ACM Application Test Results
for
Required Capabilities Tests

TEST	PTa	STa	DTa	PTr	STr	DTr	CR1	CR2	LITEr	RECPr	CR3	CR4
B24B03												
B31D12												
B32D12												
C11A10												
C12A10												
C13A10												
C14A10												
C15A10												
C21B10												
C22C16												
D11D12												
D12D12												
D13D07												
D14D07												
E11D16												
E12D16												
E13D16												
E14D14												

DTi = PTi - STi where i is either ‘a’ for acm or ‘r’ for reference

CR1 = DTa - (0.85 × DTr - 1) > 0 when DTa ≥ 0

CR2 = DTa - (1.15 × DTr - 1) > 0 when DTa < 0

CR3 = LITEa/LITEr must be ≥ 0.980 and ≤ 1.020

CR4 = RECPa/RECPr must be ≥ 0.980 and ≤ 1.020

ACM Application Test Results
for
Required Capabilities Tests

TEST	PTa	STa	DTa	PTr	STr	DTr	CR1	CR2	LITEr	RECPr	CR3	CR4
E15D14												
E16D14												
E21B16												
E22B16												
E23B16												
E24B12												
E25B12												
E26B12												
F11A07												
F12A13												
F13B12												
F14B12												
F15A01												
G11A11												
G12A11												
G13A11												
G14A11												
G15B03												
G16B16												

DTi = PTi - STi where i is either ‘a’ for acm or ‘r’ for reference

CR1 = DTa - (0.85 × DTr - 1) > 0 when DTa ≥ 0

CR2 = DTa - (1.15 × DTr - 1) > 0 when DTa < 0

CR3 = LITEa/LITEr must be ≥ 0.980 and ≤ 1.020

CR4 = RECPa/RECPr must be ≥ 0.980 and ≤ 1.020

ACM Application Test Results
for
Optional Capabilities Tests

TEST	PTa	STa	DTa	PTr	STr	DTr	CR1	CR2	LITEr	RECPr	CR3	CR4
OC1A09												
O11B13												
O12B13												
O21B13												
O22B13												
O23B13												
O24B13												
O31A12												
O32A12												
O33A12												
O41B13												
O61B12												
O62B12												
O63B12												
O64B12												
O65B12												
O66B12												

DTi = PTi - STi where i is either ‘a’ for acm or ‘r’ for reference

CR1 = DTa - (0.85 × DTr - 1) > 0 when DTa ≥ 0

CR2 = DTa - (1.15 × DTr - 1) > 0 when DTa < 0

CR3 = LITEa/LITEr must be ≥ 0.980 and ≤ 1.020

CR4 = RECPa/RECPr must be ≥ 0.980 and ≤ 1.020

ACM Application Test Results
for
Optional Capabilities Tests

TEST	PTa	STa	DTa	PTr	STr	DTr	CR1	CR2	LITEr	RECPr	CR3	CR4
O71B12												
O81A11												
O82A15												
O91A13												
O92A11												
O93A12												
O94A13												

DTi = PTi - STi where i is either ‘a’ for acm or ‘r’ for reference

CR1 = DTa - (0.85 × DTr - 1) > 0 when DTa ≥ 0

CR2 = DTa - (1.15 × DTr - 1) > 0 when DTa < 0

CR3 = LITEa/LITEr must be ≥ 0.980 and ≤ 1.020

CR4 = RECPa/RECPr must be ≥ 0.980 and ≤ 1.020

Appendix B:

Materials Reference

Appendix B: Materials Reference

Appendix B: Materials Reference

TABLE	TITLE	PAGE
Table B-1	~~—~~ASHRAE THERMAL TRANSMISSION DATA AND PROPERTIES TABLES ~~……~~	B-4~~3~~
	FRAMING CALCULATION APPROACHES/TABLES	B-18~~3~~
Table B-2	FRAMED WALL ASSEMBLY U-VALUES	B-17~~14~~
Table B-3	METAL FRAMING FACTORS	B-20~~17~~
Table B-4	PROPERTIES OF HOLLOW UNIT MASONRY WALLS	B-21~~8~~
Table B-5	PROPERTIES OF SOLID UNIT MASONRY AND SOLID CONCRETE WALLS	B-22~~19~~
Table B-6	EFFECTIVE R-VALUES FOR INTERIOR INSULATION LAYERS ON STRUCTURAL MASS WALLS	B-23~~0~~
Table B-7	FRAMED WALL, FLOOR, ~~/~~CEILING ASSEMBLIES~~Y~~	B-24~~1~~
	~~U-VALUE CALCULATION METHOD ASHRAE ..... B-39~~	
	COMPUTER METHOD	B-74~~45~~
~~Table B-8~~	~~DEFAULT FENESTRATION PRODUCT U-VALUES ..... B-47~~	
~~Table B-9~~	~~DEFAULT SOLAR HEAT GAIN COEFFICIENT ..... B-51~~	
Table B-8~~10~~	FAN MOTOR ~~MINIMUM MECHANICAL EQUIPMENT~~ EFFICIENCIES	B-75~~53~~
Table B-9~~11~~	ILLUMINANCE CATEGORIES	B-77~~61~~
Table B-10~~2~~	DEFAULT LAMP/BALLAST POWER~~WATTAGES~~	B-89~~73~~

CHAPTER 24

THERMAL AND WATER VAPOR TRANSMISSION DATA

Building Envelopes 24.1
Calculating Overall Thermal Resistances 24.2
Mechanical and Industrial Systems 24.15
Calculating Heat Flow for Buried Pipelines 24.23

THIS chapter presents thermal and water vapor transmission data based on steady-state or equilibrium conditions. Chapter 3 covers heat transfer under transient or changing temperature conditions. Chapter 22 discusses selection of insulation materials and procedures for determining overall thermal resistances by simplified methods.

BUILDING ENVELOPES

Thermal Transmission Data for Building Components

The steady-state thermal resistances (R-values) of building components (walls, floors, windows, roof systems, etc.) can be calculated from the thermal properties of the materials in the component; or the heat flow through the assembled component can be measured directly with laboratory equipment such as the guarded hot box (ASTM *Standard* C 236) or the calibrated hot box (ASTM *Standard* C 976).

Tables 1 through 6 list thermal values, which may be used to calculate thermal resistances of building walls, floors, and ceilings. The values shown in these tables were developed under ideal conditions. In practice, overall thermal performance can be reduced significantly by such factors as improper installation and shrinkage, settling, or compression of the insulation (Tye and Desjarlais 1983; Tye 1985, 1986).

Most values in these tables were obtained by accepted ASTM test methods described in ASTM *Standards* C 177 and C 518 for materials and ASTM *Standards* C 236 and C 976 for building envelope components. Because commercially available materials vary, not all values apply to specific products.

The most accurate method of determining the overall thermal resistance for a combination of building materials assembled as a building envelope component is to test a representative sample by a hot box method. However, all combinations may not be conveniently or economically tested in this manner. For many simple constructions, calculated R-values agree reasonably well with values determined by hot box measurement.

The performance of materials fabricated in the field is especially subject to the quality of workmanship during construction and installation. Good workmanship becomes increasingly important as the insulation requirement becomes greater. Therefore, some engineers include additional insulation or other safety factors based on experience in their design.

Figure 1 shows how convection affects surface conductance of several materials. Other tests on smooth surfaces show that the average value of the convection part of the surface conductance decreases as the length of the surface increases.

Vapor retarders, which are discussed in Chapters 22 and 23, require special attention. Moisture from condensation or other sources may reduce the thermal resistance of insulation, but the effect of moisture must be determined for each material. For example, some materials with large air spaces are not affected significantly if the moisture content is less than 10% by weight, while the effect of moisture on other materials is approximately linear.

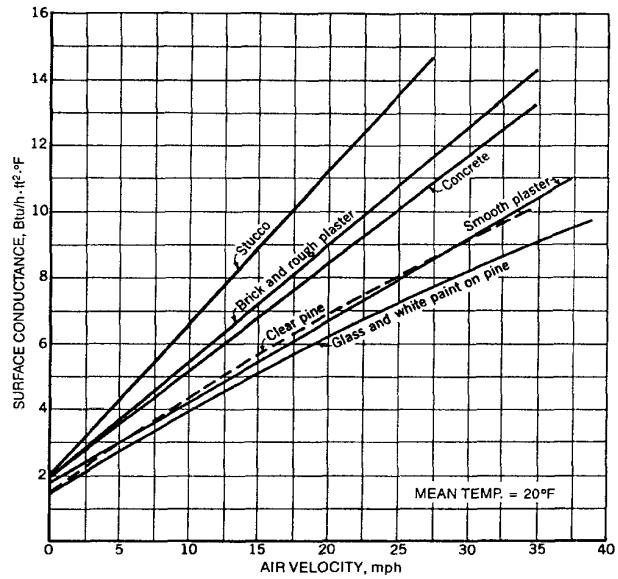

Fig. 1 Surface Conductance for Different Surfaces as Affected by Air Movement

Ideal conditions of components and installations are assumed in calculating overall R-values (i.e., insulating materials are of uniform nominal thickness and thermal resistance, air spaces are of uniform thickness and surface temperature, moisture effects are not involved, and installation details are in accordance with design). The National Institute of Standards and Technology Building Materials and Structures Report BMS 151 shows that measured values differ from calculated values for certain insulated constructions. For this reason, some engineers decrease the calculated R-values a moderate amount to account for departures of constructions from requirements and practices.

Tables 3 and 2 give values for well-sealed systems constructed with care. Field applications can differ substantially from laboratory test conditions. Air gaps in these insulation systems can seriously degrade thermal performance as a result of air movement due to both natural and forced convection. Sabine et al. (1975) found that the tabular values are not necessarily additive for multiple-layer, low-emittance air spaces, and tests on actual constructions should be conducted to accurately determine thermal resistance values.

Values for foil insulation products supplied by manufacturers must also be used with caution because they apply only to systems that are identical to the configuration in which the product was tested. In addition, surface oxidation, dust accumulation, condensation, and other factors that change the condition of the low-emittance surface can reduce the thermal effectiveness of

The preparation of this chapter is assigned to TC 4.4, Thermal Insulation and Moisture Retarders.

Table 1 Surface Conductances and Resistances for Air

Position of Surface	Direction of Heat Flow	Surface Emittance, ε: Non-reflective ε = 0.90 h_i	R	Reflective ε = 0.20 h_i	R	Reflective ε = 0.05 h_i	R
STILL AIR							
Horizontal	Upward	1.63	0.61	0.91	1.10	0.76	1.32
Sloping—45°	Upward	1.60	0.62	0.88	1.14	0.73	1.37
Vertical	Horizontal	1.46	0.68	0.74	1.35	0.59	1.70
Sloping—45°	Downward	1.32	0.76	0.60	1.67	0.45	2.22
Horizontal	Downward	1.08	0.92	0.37	2.70	0.22	4.55
MOVING AIR (Any position)		h_o	R				
15-mph Wind (for winter)	Any	6.00	0.17	—	—	—	—
7.5-mph Wind (for summer)	Any	4.00	0.25	—	—	—	—

Notes:
1. Surface conductance h_i and h_o measured in Btu/h·ft²·°F; resistance R in °F·ft²·h/Btu.
2. No surface has both an air space resistance value and a surface resistance value.
3. For ventilated attics or spaces above ceilings under summer conditions (heat flow down), see Table 5.
4. Conductances are for surfaces of the stated emittance facing virtual blackbody surroundings at the same temperature as the ambient air. Values are based on a surface-air temperature difference of 10°F and for surface temperatures of 70°F.
5. See Chapter 3 for more detailed information, especially Tables 5 and 6, and see Figure 1 for additional data.
6. Condensate can have a significant impact on surface emittance (see Table 2).

these insulation systems (Hooper and Moroz 1952). Deterioration results from contact with several types of solutions, either acidic or basic (e.g., wet cement mortar or the preservatives found in decay-resistant lumber). Polluted environments may cause rapid and severe material degradation. However, site inspections show a predominance of well-preserved installations and only a small number of cases in which rapid and severe deterioration has occurred. An extensive review of the reflective building insulation system performance literature is provided by Goss and Miller (1989).

CALCULATING OVERALL THERMAL RESISTANCES

Relatively small, highly conductive elements in an insulating layer called thermal bridges can substantially reduce the average thermal resistance of a component. Examples include wood and metal studs in frame walls, concrete webs in concrete masonry walls, and metal ties or other elements in insulated wall panels. The following examples illustrate the calculation of R-values and U-factors for components containing thermal bridges.

These conditions are assumed in calculating the design R-values:

- Equilibrium or steady-state heat transfer, disregarding effects of thermal storage
- Surrounding surfaces at ambient air temperature
- Exterior wind velocity of 15 mph for winter (surface with $R = 0.17°F \cdot ft^2 \cdot h/Btu$) and 7.5 mph for summer (surface with $R = 0.25°F \cdot ft^2 \cdot h/Btu$)
- Surface emittance of ordinary building materials is 0.90

Wood Frame Walls

The average overall R-values and U-factors of wood frame walls can be calculated by assuming either parallel heat flow paths through areas with different thermal resistances or by assuming isothermal planes. Equations (1) through (5) from Chapter 22 are used.

Table 2 Emittance Values of Various Surfaces and Effective Emittances of Air Spaces[a]

Surface	Average Emittance ε	Effective Emittance ε_{eff} of Air Space: One Surface Emittance ε; Other, 0.9	Both Surfaces Emittance ε
Aluminum foil, bright	0.05	0.05	0.03
Aluminum foil, with condensate just visible (> 0.7 gr/ft²)	0.30[b]	0.29	—
Aluminum foil, with condensate clearly visible (> 2.9 gr/ft²)	0.70[b]	0.65	—
Aluminum sheet	0.12	0.12	0.06
Aluminum coated paper, polished	0.20	0.20	0.11
Steel, galvanized, bright	0.25	0.24	0.15
Aluminum paint	0.50	0.47	0.35
Building materials: wood, paper, masonry, nonmetallic paints	0.90	0.82	0.82
Regular glass	0.84	0.77	0.72

[a]These values apply in the 4 to 40 μm range of the electromagnetic spectrum.
[b]Values are based on data presented by Bassett and Trethowen (1984).

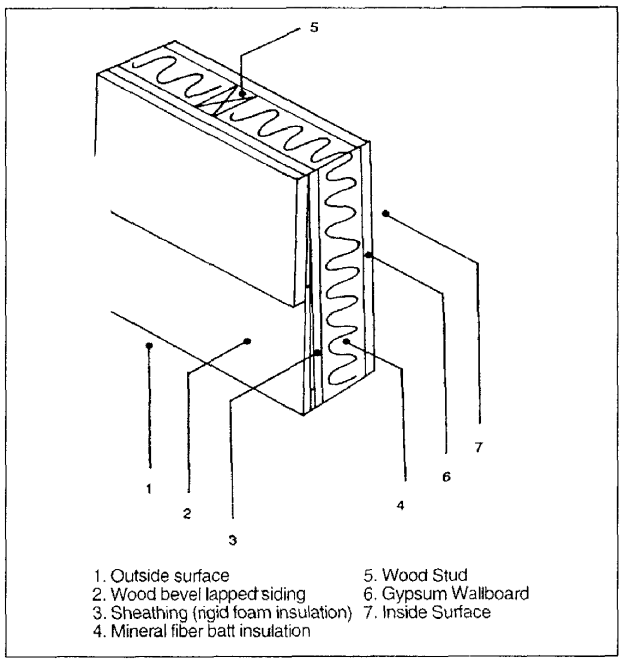

Fig. 2 Insulated Wood Frame Wall (Example 1)

The framing factor or fraction of the building component that is framing depends on the specific type of construction, and it may vary based on local construction practices—even for the same type of construction. For stud walls 16 in. on center (OC), the fraction of insulated cavity may be as low as 0.75, where the fraction of studs, plates, and sills is 0.21 and the fraction of headers is 0.04. For studs 24 in. OC, the respective values are 0.78, 0.18, and 0.04. These fractions contain an allowance for multiple studs, plates, sills, extra framing around windows, headers, and band joists. These assumed framing fractions are used in the following example, to illustrate the importance of including the effect of framing in determining the overall thermal conductance of a building. The actual framing fraction should be calculated for each specific construction.

Thermal and Water Vapor Transmission Data 24.3

Table 3 Thermal Resistances of Plane Air Spaces[a,b,c], °F·ft²·h/Btu

Position of Air Space	Direction of Heat Flow	Air Space Mean Temp.[d], °F	Air Space Temp. Diff.[d], °F	0.5-in. Air Space[c] Effective Emittance ε_{eff}[d,e] 0.03	0.05	0.2	0.5	0.82	0.75-in. Air Space[c] Effective Emittance ε_{eff}[d,e] 0.03	0.05	0.2	0.5	0.82
		90	10	2.13	2.03	1.51	0.99	0.73	2.34	2.22	1.61	1.04	0.75
		50	30	1.62	1.57	1.29	0.96	0.75	1.71	1.66	1.35	0.99	0.77
		50	10	2.13	2.05	1.60	1.11	0.84	2.30	2.21	1.70	1.16	0.87
Horiz.	Up	0	20	1.73	1.70	1.45	1.12	0.91	1.83	1.79	1.52	1.16	0.93
		0	10	2.10	2.04	1.70	1.27	1.00	2.23	2.16	1.78	1.31	1.02
		−50	20	1.69	1.66	1.49	1.23	1.04	1.77	1.74	1.55	1.27	1.07
		−50	10	2.04	2.00	1.75	1.40	1.16	2.16	2.11	1.84	1.46	1.20
		90	10	2.44	2.31	1.65	1.06	0.76	2.96	2.78	1.88	1.15	0.81
		50	30	2.06	1.98	1.56	1.10	0.83	1.99	1.92	1.52	1.08	0.82
45° Slope	Up	50	10	2.55	2.44	1.83	1.22	0.90	2.90	2.75	2.00	1.29	0.94
		0	20	2.20	2.14	1.76	1.30	1.02	2.13	2.07	1.72	1.28	1.00
		0	10	2.63	2.54	2.03	1.44	1.10	2.72	2.62	2.08	1.47	1.12
		−50	20	2.08	2.04	1.78	1.42	1.17	2.05	2.01	1.76	1.41	1.16
		−50	10	2.62	2.56	2.17	1.66	1.33	2.53	2.47	2.10	1.62	1.30
		90	10	2.47	2.34	1.67	1.06	0.77	3.50	3.24	2.08	1.22	0.84
		50	30	2.57	2.46	1.84	1.23	0.90	2.91	2.77	2.01	1.30	0.94
		50	10	2.66	2.54	1.88	1.24	0.91	3.70	3.46	2.35	1.43	1.01
Vertical	Horiz.	0	20	2.82	2.72	2.14	1.50	1.13	3.14	3.02	2.32	1.58	1.18
		0	10	2.93	2.82	2.20	1.53	1.15	3.77	3.59	2.64	1.73	1.26
		−50	20	2.90	2.82	2.35	1.76	1.39	2.90	2.83	2.36	1.77	1.39
		−50	10	3.20	3.10	2.54	1.87	1.46	3.72	3.60	2.87	2.04	1.56
		90	10	2.48	2.34	1.67	1.06	0.77	3.53	3.27	2.10	1.22	0.84
		50	30	2.64	2.52	1.87	1.24	0.91	3.43	3.23	2.24	1.39	0.99
45° Slope	Down	50	10	2.67	2.55	1.89	1.25	0.92	3.81	3.57	2.40	1.45	1.02
		0	20	2.91	2.80	2.19	1.52	1.15	3.75	3.57	2.63	1.72	1.26
		0	10	2.94	2.83	2.21	1.53	1.15	4.12	3.91	2.81	1.80	1.30
		−50	20	3.16	3.07	2.52	1.86	1.45	3.78	3.65	2.90	2.05	1.57
		−50	10	3.26	3.16	2.58	1.89	1.47	4.35	4.18	3.22	2.21	1.66
		90	10	2.48	2.34	1.67	1.06	0.77	3.55	3.29	2.10	1.22	0.85
		50	30	2.66	2.54	1.88	1.24	0.91	3.77	3.52	2.38	1.44	1.02
		50	10	2.67	2.55	1.89	1.25	0.92	3.84	3.59	2.41	1.45	1.02
Horiz.	Down	0	20	2.94	2.83	2.20	1.53	1.15	4.18	3.96	2.83	1.81	1.30
		0	10	2.96	2.85	2.22	1.53	1.16	4.25	4.02	2.87	1.82	1.31
		−50	20	3.25	3.15	2.58	1.89	1.47	4.60	4.41	3.36	2.28	1.69
		−50	10	3.28	3.18	2.60	1.90	1.47	4.71	4.51	3.42	2.30	1.71
		Air Space		**1.5-in. Air Space[c]**					**3.5-in. Air Space[c]**				
		90	10	2.55	2.41	1.71	1.08	0.77	2.84	2.66	1.83	1.13	0.80
		50	30	1.87	1.81	1.45	1.04	0.80	2.09	2.01	1.58	1.10	0.84
		50	10	2.50	2.40	1.81	1.21	0.89	2.80	2.66	1.95	1.28	0.93
Horiz.	Up	0	20	2.01	1.95	1.63	1.23	0.97	2.25	2.18	1.79	1.32	1.03
		0	10	2.43	2.35	1.90	1.38	1.06	2.71	2.62	2.07	1.47	1.12
		−50	20	1.94	1.91	1.68	1.36	1.13	2.19	2.14	1.86	1.47	1.20
		−50	10	2.37	2.31	1.99	1.55	1.26	2.65	2.58	2.18	1.67	1.33
		90	10	2.92	2.73	1.86	1.14	0.80	3.18	2.96	1.97	1.18	0.82
		50	30	2.14	2.06	1.61	1.12	0.84	2.26	2.17	1.67	1.15	0.86
45° Slope	Up	50	10	2.88	2.74	1.99	1.29	0.94	3.12	2.95	2.10	1.34	0.96
		0	20	2.30	2.23	1.82	1.34	1.04	2.42	2.35	1.90	1.38	1.06
		0	10	2.79	2.69	2.12	1.49	1.13	2.98	2.87	2.23	1.54	1.16
		−50	20	2.22	2.17	1.88	1.49	1.21	2.34	2.29	1.97	1.54	1.25
		−50	10	2.71	2.64	2.23	1.69	1.35	2.87	2.79	2.33	1.75	1.39
		90	10	3.99	3.66	2.25	1.27	0.87	3.69	3.40	2.15	1.24	0.85
		50	30	2.58	2.46	1.84	1.23	0.90	2.67	2.55	1.89	1.25	0.91
		50	10	3.79	3.55	2.39	1.45	1.02	3.63	3.40	2.32	1.42	1.01
Vertical	Horiz.	0	20	2.76	2.66	2.10	1.48	1.12	2.88	2.78	2.17	1.51	1.14
		0	10	3.51	3.35	2.51	1.67	1.23	3.49	3.33	2.50	1.67	1.23
		−50	20	2.64	2.58	2.18	1.66	1.33	2.82	2.75	2.30	1.73	1.37
		−50	10	3.31	3.21	2.62	1.91	1.48	3.40	3.30	2.67	1.94	1.50
		90	10	5.07	4.55	2.56	1.36	0.91	4.81	4.33	2.49	1.34	0.90
		50	30	3.58	3.36	2.31	1.42	1.00	3.51	3.30	2.28	1.40	1.00
45° Slope	Down	50	10	5.10	4.66	2.85	1.60	1.09	4.74	4.36	2.73	1.57	1.08
		0	20	3.85	3.66	2.68	1.74	1.27	3.81	3.63	2.66	1.74	1.27
		0	10	4.92	4.62	3.16	1.94	1.37	4.59	4.32	3.02	1.88	1.34
		−50	20	3.62	3.50	2.80	2.01	1.54	3.77	3.64	2.90	2.05	1.57
		−50	10	4.67	4.47	3.40	2.29	1.70	4.50	4.32	3.31	2.25	1.68
		90	10	6.09	5.35	2.79	1.43	0.94	10.07	8.19	3.41	1.57	1.00
		50	30	6.27	5.63	3.18	1.70	1.14	9.60	8.17	3.86	1.88	1.22
		50	10	6.61	5.90	3.27	1.73	1.15	11.15	9.27	4.09	1.93	1.24
Horiz.	Down	0	20	7.03	6.43	3.91	2.19	1.49	10.90	9.52	4.87	2.47	1.62
		0	10	7.31	6.66	4.00	2.22	1.51	11.97	10.32	5.08	2.52	1.64
		−50	20	7.73	7.20	4.77	2.85	1.99	11.64	10.49	6.02	3.25	2.18
		−50	10	8.09	7.52	4.91	2.89	2.01	12.98	11.56	6.36	3.34	2.22

[a]See Chapter 22, section Factors Affecting Heat Transfer across Air Spaces. Thermal resistance values were determined from the relation, $R = 1/C$, where $C = h_c + \varepsilon_{eff} h_r$, h_c is the conduction-convection coefficient, $\varepsilon_{eff} h_r$ is the radiation coefficient $\approx 0.0068\varepsilon_{eff}[(t_m + 460)/100]^3$, and t_m is the mean temperature of the air space. Values for h_c were determined from data developed by Robinson et al. (1954). Equations (5) through (7) in Yarbrough (1983) show the data in this table in analytic form. For extrapolation from this table to air spaces less than 0.5 in. (as in insulating window glass), assume $h_c = 0.159(1 + 0.0016\, t_m)/l$ where l is the air space thickness in inches, and h_c is heat transfer through the air space only.

[b]Values are based on data presented by Robinson et al. (1954). (Also see Chapter 3, Tables 3 and 4, and Chapter 36). Values apply for ideal conditions, i.e., air spaces of uniform thickness bounded by plane, smooth, parallel surfaces with no air leakage to or from the space. When accurate values are required, use overall U-factors determined through calibrated hot box (ASTM C 976) or guarded hot box (ASTM C 236) testing. Thermal resistance values for multiple air spaces must be based on careful estimates of mean temperature differences for each air space.

[c]A single resistance value cannot account for multiple air spaces; each air space requires a separate resistance calculation that applies only for the established boundary conditions. Resistances of horizontal spaces with heat flow downward are substantially independent of temperature difference.

[d]Interpolation is permissible for other values of mean temperature, temperature difference, and effective emittance ε_{eff}. Interpolation and moderate extrapolation for air spaces greater than 3.5 in. are also permissible.

[e]Effective emittance ε_{eff} of the air space is given by $1/\varepsilon_{eff} = 1/\varepsilon_1 + 1/\varepsilon_2 - 1$, where ε_1 and ε_2 are the emittances of the surfaces of the air space (see Table 2).

Table 4 Typical Thermal Properties of Common Building and Insulating Materials—Design Values[a]

Description	Density, lb/ft³	Conductivity[b] (k), Btu·in / h·ft²·°F	Conductance (C), Btu / h·ft²·°F	Resistance[c] (R) Per Inch Thickness (1/k), °F·ft²·h / Btu·in	Resistance[c] (R) For Thickness Listed (1/C), °F·ft²·h / Btu	Specific Heat, Btu / lb·°F
BUILDING BOARD						
Asbestos-cement board	120	4.0	—	0.25	—	0.24
Asbestos-cement board ... 0.125 in.	120	—	33.00	—	0.03	
Asbestos-cement board ... 0.25 in.	120	—	16.50	—	0.06	
Gypsum or plaster board ... 0.375 in.	50	—	3.10	—	0.32	0.26
Gypsum or plaster board ... 0.5 in.	50	—	2.22	—	0.45	
Gypsum or plaster board ... 0.625 in.	50	—	1.78	—	0.56	
Plywood (Douglas Fir)[d]	34	0.80	—	1.25	—	0.29
Plywood (Douglas Fir) ... 0.25 in.	34	—	3.20	—	0.31	
Plywood (Douglas Fir) ... 0.375 in.	34	—	2.13	—	0.47	
Plywood (Douglas Fir) ... 0.5 in.	34	—	1.60	—	0.62	
Plywood (Douglas Fir) ... 0.625 in.	34	—	1.29	—	0.77	
Plywood or wood panels ... 0.75 in.	34	—	1.07	—	0.93	0.29
Vegetable fiber board						
Sheathing, regular density[e] ... 0.5 in.	18	—	0.76	—	1.32	0.31
... 0.78125 in.	18	—	0.49	—	2.06	
Sheathing intermediate density[e] ... 0.5 in.	22	—	0.92	—	1.09	0.31
Nail-base sheathing[e] ... 0.5 in.	25	—	0.94	—	1.06	0.31
Shingle backer ... 0.375 in.	18	—	1.06	—	0.94	0.31
Shingle backer ... 0.3125 in.	18	—	1.28	—	0.78	
Sound deadening board ... 0.5 in.	15	—	0.74	—	1.35	0.30
Tile and lay-in panels, plain or acoustic	18	0.40	—	2.50	—	0.14
... 0.5 in.	18	—	0.80	—	1.25	
... 0.75 in.	18	—	0.53	—	1.89	
Laminated paperboard	30	0.50	—	2.00	—	0.33
Homogeneous board from repulped paper	30	0.50	—	2.00	—	0.28
Hardboard[e]						
Medium density	50	0.73	—	1.37	—	0.31
High density, service-tempered grade and service grade	55	0.82	—	1.22	—	0.32
High density, standard-tempered grade	63	1.00	—	1.00	—	0.32
Particleboard[e]						
Low density	37	0.71	—	1.41	—	0.31
Medium density	50	0.94	—	1.06	—	0.31
High density	62	.5	1.18	—	0.85	—
Underlayment ... 0.625 in.	40	—	1.22	—	0.82	0.29
Waferboard	37	0.63	—	1.59	—	—
Wood subfloor ... 0.75 in.	—	—	1.06	—	0.94	0.33
BUILDING MEMBRANE						
Vapor—permeable felt	—	—	16.70	—	0.06	
Vapor—seal, 2 layers of mopped 15-lb felt	—	—	8.35	—	0.12	
Vapor—seal, plastic film	—	—	—	—	Negl.	
FINISH FLOORING MATERIALS						
Carpet and fibrous pad	—	—	0.48	—	2.08	0.34
Carpet and rubber pad	—	—	0.81	—	1.23	0.33
Cork tile ... 0.125 in.	—	—	3.60	—	0.28	0.48
Terrazzo ... 1 in.	—	—	12.50	—	0.08	0.19
Tile—asphalt, linoleum, vinyl, rubber	—	—	20.00	—	0.05	0.30
vinyl asbestos						0.24
ceramic						0.19
Wood, hardwood finish ... 0.75 in.	—	—	1.47	—	0.68	
INSULATING MATERIALS						
Blanket and Batt[f,g]						
Mineral fiber, fibrous form processed from rock, slag, or glass						
approx. 3-4 in.	0.4-2.0	—	0.091	—	11	
approx. 3.5 in.	0.4-2.0	—	0.077	—	13	
approx. 3.5 in.	1.2-1.6	—	0.067	—	15	
approx. 5.5-6.5 in.	0.4-2.0	—	0.053	—	19	
approx. 5.5 in.	0.6-1.0	—	0.048	—	21	
approx. 6-7.5 in.	0.4-2.0	—	0.045	—	22	
approx. 8.25-10 in.	0.4-2.0	—	0.033	—	30	
approx. 10-13 in.	0.4-2.0	—	0.026	—	38	
Board and Slabs						
Cellular glass	8.0	0.33	—	3.03	—	0.18
Glass fiber, organic bonded	4.0-9.0	0.25	—	4.00	—	0.23
Expanded perlite, organic bonded	1.0	0.36	—	2.78	—	0.30
Expanded rubber (rigid)	4.5	0.22	—	4.55	—	0.40
Expanded polystyrene, extruded (smooth skin surface) (CFC-12 exp.)	1.8-3.5	0.20	—	5.00	—	0.29

Thermal and Water Vapor Transmission Data 24.5

Table 4 Typical Thermal Properties of Common Building and Insulating Materials—Design Values[a] (Continued)

Description	Density, lb/ft³	Conductivity[b] (k), Btu·in / h·ft²·°F	Conductance (C), Btu / h·ft²·°F	Resistance[c] (R) Per Inch Thickness (1/k), °F·ft²·h / Btu·in	Resistance[c] (R) For Thickness Listed (1/C), °F·ft²·h / Btu	Specific Heat, Btu / lb·°F
Expanded polystyrene, extruded (smooth skin surface) (HCFC-142b exp.)[h]	1.8-3.5	0.20	—	5.00	—	0.29
Expanded polystyrene, molded beads	1.0	0.26	—	3.85	—	—
	1.25	0.25	—	4.00	—	—
	1.5	0.24	—	4.17	—	—
	1.75	0.24	—	4.17	—	—
	2.0	0.23	—	4.35	—	—
Cellular polyurethane/polyisocyanurate[il] (CFC-11 exp.) (unfaced)	1.5	0.16-0.18	—	6.25-5.56	—	0.38
Cellular polyisocyanurate[i] (CFC-11 exp.) (gas-permeable facers)	1.5-2.5	0.16-0.18	—	6.25-5.56	—	0.22
Cellular polyisocyanurate[j] (CFC-11 exp.) (gas-impermeable facers)	2.0	0.14	—	7.04	—	0.22
Cellular phenolic (closed cell) (CFC-11, CFC-113 exp.)[k]	3.0	0.12	—	8.20	—	—
Cellular phenolic (open cell)	1.8-2.2	0.23	—	4.40	—	—
Mineral fiber with resin binder	15.0	0.29	—	3.45	—	0.17
Mineral fiberboard, wet felted						
Core or roof insulation	16-17	0.34	—	2.94	—	—
Acoustical tile	18.0	0.35	—	2.86	—	0.19
Acoustical tile	21.0	0.37	—	2.70	—	—
Mineral fiberboard, wet molded						
Acoustical tile[l]	23.0	0.42	—	2.38	—	0.14
Wood or cane fiberboard						
Acoustical tile[l] 0.5 in.	—	—	0.80	—	1.25	0.31
Acoustical tile[l] 0.75 in.	—	—	0.53	—	1.89	—
Interior finish (plank, tile)	15.0	0.35	—	2.86	—	0.32
Cement fiber slabs (shredded wood with Portland cement binder)	25-27.0	0.50-0.53		2.0-1.89	—	
Cement fiber slabs (shredded wood with magnesia oxysulfide binder)	22.0	0.57	—	1.75	—	0.31
Loose Fill						
Cellulosic insulation (milled paper or wood pulp)	2.3-3.2	0.27-0.32	—	3.70-3.13	—	0.33
Perlite, expanded	2.0-4.1	0.27-0.31	—	3.7-3.3	—	0.26
	4.1-7.4	0.31-0.36	—	3.3-2.8	—	—
	7.4-11.0	0.36-0.42	—	2.8-2.4	—	—
Mineral fiber (rock, slag, or glass)[g]						
approx. 3.75-5 in.	0.6-2.0	—	—	—	11.0	0.17
approx. 6.5-8.75 in.	0.6-2.0	—	—	—	19.0	—
approx. 7.5-10 in.	0.6-2.0	—	—	—	22.0	—
approx. 10.25-13.75 in.	0.6-2.0	—	—	—	30.0	—
Mineral fiber (rock, slag, or glass)[g]						
approx. 3.5 in. (closed sidewall application)	2.0-3.5	—	—	—	12.0-14.0	—
Vermiculite, exfoliated	7.0-8.2	0.47	—	2.13	—	0.32
	4.0-6.0	0.44	—	2.27	—	—
Spray Applied						
Polyurethane foam	1.5-2.5	0.16-0.18	—	6.25-5.56	—	—
Ureaformaldehyde foam	0.7-1.6	0.22-0.28	—	4.55-3.57	—	—
Cellulosic fiber	3.5-6.0	0.29-0.34	—	3.45-2.94	—	—
Glass fiber	3.5-4.5	0.26-0.27	—	3.85-3.70	—	—
Reflective Insulation						
Reflective material ($\varepsilon < 0.5$) in center of 3/4 in. cavity forms two 3/8 in. vertical air spaces[m]	—	—	0.31	—	3.2	—
METALS (See Chapter 36, Table 3)						
ROOFING						
Asbestos-cement shingles	120	—	4.76	—	0.21	0.24
Asphalt roll roofing	70	—	6.50	—	0.15	0.36
Asphalt shingles	70	—	2.27	—	0.44	0.30
Built-up roofing 0.375 in.	70	—	3.00	—	0.33	0.35
Slate 0.5 in.	—	—	20.00	—	0.05	0.30
Wood shingles, plain and plastic film faced	—	—	1.06	—	0.94	0.31
PLASTERING MATERIALS						
Cement plaster, sand aggregate	116	5.0	—	0.20	—	0.20
Sand aggregate 0.375 in.	—	—	13.3	—	0.08	0.20
Sand aggregate 0.75 in.	—	—	6.66	—	0.15	0.20

Table 4 Typical Thermal Properties of Common Building and Insulating Materials—Design Values[a] (Continued)

Description	Density, lb/ft³	Conductivity[b] (k), Btu·in / h·ft²·°F	Conductance (C), Btu / h·ft²·°F	Resistance[c] (R) Per Inch Thickness (1/k), °F·ft²·h / Btu·in	Resistance[c] (R) For Thickness Listed (1/C), °F·ft²·h / Btu	Specific Heat, Btu / lb·°F
Gypsum plaster:						
Lightweight aggregate ..... 0.5 in.	45	—	3.12	—	0.32	—
Lightweight aggregate ..... 0.625 in.	45	—	2.67	—	0.39	—
Lightweight aggregate on metal lath ..... 0.75 in.	—	—	2.13	—	0.47	—
Perlite aggregate	45	1.5	—	0.67	—	0.32
Sand aggregate	105	5.6	—	0.18	—	0.20
Sand aggregate ..... 0.5 in.	105	—	11.10	—	0.09	—
Sand aggregate ..... 0.625 in.	105	—	9.10	—	0.11	—
Sand aggregate on metal lath ..... 0.75 in.	—	—	7.70	—	0.13	—
Vermiculite aggregate	45	1.7	—	0.59	—	—
MASONRY MATERIALS						
Masonry Units						
Brick, fired clay	150	8.4-10.2	—	0.12-0.10	—	—
	140	7.4-9.0	—	0.14-0.11	—	—
	130	6.4-7.8	—	0.16-0.12	—	—
	120	5.6-6.8	—	0.18-0.15	—	0.19
	110	4.9-5.9	—	0.20-0.17	—	—
	100	4.2-5.1	—	0.24-0.20	—	—
	90	3.6-4.3	—	0.28-0.24	—	—
	80	3.0-3.7	—	0.33-0.27	—	—
	70	2.5-3.1	—	0.40-0.33	—	—
Clay tile, hollow						
1 cell deep ..... 3 in.	—	—	1.25	—	0.80	0.21
1 cell deep ..... 4 in.	—	—	0.90	—	1.11	—
2 cells deep ..... 6 in.	—	—	0.66	—	1.52	—
2 cells deep ..... 8 in.	—	—	0.54	—	1.85	—
2 cells deep ..... 10 in.	—	—	0.45	—	2.22	—
3 cells deep ..... 12 in.	—	—	0.40	—	2.50	—
Concrete blocks[n, o]						
Limestone aggregate						
8 in., 36 lb, 138 lb/ft³ concrete, 2 cores	—	—	—	—	—	—
Same with perlite filled cores	—	—	0.48	—	2.1	—
12 in., 55 lb, 138 lb/ft³ concrete, 2 cores	—	—	—	—	—	—
Same with perlite filled cores	—	—	0.27	—	3.7	—
Normal weight aggregate (sand and gravel)						
8 in., 33-36 lb, 126-136 lb/ft³ concrete, 2 or 3 cores	—	—	0.90-1.03	—	1.11-0.97	0.22
Same with perlite filled cores	—	—	0.50	—	2.0	—
Same with vermiculite filled cores	—	—	0.52-0.73	—	1.92-1.37	—
12 in., 50 lb, 125 lb/ft³ concrete, 2 cores	—	—	0.81	—	1.23	0.22
Medium weight aggregate (combinations of normal weight and lightweight aggregate)						
8 in., 26-29 lb, 97-112 lb/ft³ concrete, 2 or 3 cores..	—	—	0.58-0.78	—	1.71-1.28	—
Same with perlite filled cores	—	—	0.27-0.44	—	3.7-2.3	—
Same with vermiculite filled cores	—	—	0.30	—	3.3	—
Same with molded EPS (beads) filled cores	—	—	0.32	—	3.2	—
Same with molded EPS inserts in cores	—	—	0.37	—	2.7	—
Lightweight aggregate (expanded shale, clay, slate or slag, pumice)						
6 in., 16-17 lb 85-87 lb/ft³ concrete, 2 or 3 cores	—	—	0.52-0.61	—	1.93-1.65	—
Same with perlite filled cores	—	—	0.24	—	4.2	—
Same with vermiculite filled cores	—	—	0.33	—	3.0	—
8 in., 19-22 lb, 72-86 lb/ft³ concrete	—	—	0.32-0.54	—	3.2-1.90	0.21
Same with perlite filled cores	—	—	0.15-0.23	—	6.8-4.4	—
Same with vermiculite filled cores	—	—	0.19-0.26	—	5.3-3.9	—
Same with molded EPS (beads) filled cores	—	—	0.21	—	4.8	—
Same with UF foam filled cores	—	—	0.22	—	4.5	—
Same with molded EPS inserts in cores	—	—	0.29	—	3.5	—
12 in., 32-36 lb, 80-90 lb/ft³ concrete, 2 or 3 cores...	—	—	0.38-0.44	—	2.6-2.3	—
Same with perlite filled cores	—	—	0.11-0.16	—	9.2-6.3	—
Same with vermiculite filled cores	—	—	0.17	—	5.8	—
Stone, lime, or sand	180	72	—	0.01	—	—
Quartzitic and sandstone	160	43	—	0.02	—	—
	140	24	—	0.04	—	—
	120	13	—	0.08	—	0.19
Calcitic, dolomitic, limestone, marble, and granite	180	30	—	0.03	—	—
	160	22	—	0.05	—	—
	140	16	—	0.06	—	—
	120	11	—	0.09	—	0.19
	100	8	—	0.13	—	—

Thermal and Water Vapor Transmission Data 24.7

Table 4 Typical Thermal Properties of Common Building and Insulating Materials—Design Values[a] (Continued)

Description	Density, lb/ft³	Conductivity[b] (k), Btu·in / h·ft²·°F	Conductance (C), Btu / h·ft²·°F	Resistance[c] (R) Per Inch Thickness (1/k), °F·ft²·h / Btu·in	Resistance[c] (R) For Thickness Listed (1/C), °F·ft²·h / Btu	Specific Heat, Btu / lb·°F
Gypsum partition tile						
3 by 12 by 30 in., solid	—	—	0.79	—	1.26	0.19
3 by 12 by 30 in., 4 cells	—	—	0.74	—	1.35	—
4 by 12 by 30 in., 3 cells	—	—	0.60	—	1.67	—
Concretes[o]						
Sand and gravel or stone aggregate concretes (concretes	150	10.0-20.0	—	0.10-0.05	—	—
with more than 50% quartz or quartzite sand have	140	9.0-18.0	—	0.11-0.06	—	0.19-0.24
conductivities in the higher end of the range)	130	7.0-13.0	—	0.14-0.08	—	—
Limestone concretes	140	11.1	—	0.09	—	—
	120	7.9	—	0.13	—	—
	100	5.5	—	0.18	—	—
Gypsum-fiber concrete (87.5% gypsum, 12.5% wood chips)	51	1.66	—	0.60	—	0.21
Cement/lime, mortar, and stucco	120	9.7	—	0.10	—	—
	100	6.7	—	0.15	—	—
	80	4.5	—	0.22	—	—
Lightweight aggregate concretes						
Expanded shale, clay, or slate; expanded slags;	120	6.4-9.1	—	0.16-0.11	—	—
cinders; pumice (with density up to 100 lb/ft³); and	100	4.7-6.2	—	0.21-0.16	—	0.20
scoria (sanded concretes have conductivities in the	80	3.3-4.1	—	0.30-0.24	—	0.20
higher end of the range)	60	2.1-2.5	—	0.48-0.40	—	—
	40	1.3	—	0.78	—	—
Perlite, vermiculite, and polystyrene beads	50	1.8-1.9	—	0.55-0.53	—	—
	40	1.4-1.5	—	0.71-0.67	—	0.15-0.23
	30	1.1	—	0.91	—	—
	20	0.8	—	1.25	—	—
Foam concretes	120	5.4	—	0.19	—	—
	100	4.1	—	0.24	—	—
	80	3.0	—	0.33	—	—
	70	2.5	—	0.40	—	—
Foam concretes and cellular concretes	60	2.1	—	0.48	—	—
	40	1.4	—	0.71	—	—
	20	0.8	—	1.25	—	—
SIDING MATERIALS (on flat surface)						
Shingles						
Asbestos-cement	120	—	4.75	—	0.21	—
Wood, 16 in., 7.5 exposure	—	—	1.15	—	0.87	0.31
Wood, double, 16-in., 12-in. exposure	—	—	0.84	—	1.19	0.28
Wood, plus ins. backer board, 0.312 in.	—	—	0.71	—	1.40	0.31
Siding						
Asbestos-cement, 0.25 in., lapped	—	—	4.76	—	0.21	0.24
Asphalt roll siding	—	—	6.50	—	0.15	0.35
Asphalt insulating siding (0.5 in. bed.)	—	—	0.69	—	1.46	0.35
Hardboard siding, 0.4375 in.	—	—	1.49	—	0.67	0.28
Wood, drop, 1 by 8 in.	—	—	1.27	—	0.79	0.28
Wood, bevel, 0.5 by 8 in., lapped	—	—	1.23	—	0.81	0.28
Wood, bevel, 0.75 by 10 in., lapped	—	—	0.95	—	1.05	0.28
Wood, plywood, 0.375 in., lapped	—	—	1.69	—	0.59	0.29
Aluminum, steel, or vinyl[p, q], over sheathing						
Hollow-backed	—	—	1.64	—	0.61	0.29[q]
Insulating-board backed nominal 0.375 in.	—	—	0.55	—	1.82	0.32
Insulating-board backed nominal 0.375 in., foil backed	—	—	0.34	—	2.96	—
Architectural (soda-lime float) glass	158	6.9	—	—	—	0.21
WOODS (12% moisture content)[e,r]						
Hardwoods						0.39[s]
Oak	41.2-46.8	1.12-1.25	—	0.89-0.80	—	
Birch	42.6-45.4	1.16-1.22	—	0.87-0.82	—	
Maple	39.8-44.0	1.09-1.19	—	0.92-0.84	—	
Ash	38.4-41.9	1.06-1.14	—	0.94-0.88	—	
Softwoods						0.39[s]
Southern Pine	35.6-41.2	1.00-1.12	—	1.00-0.89	—	
Douglas Fir-Larch	33.5-36.3	0.95-1.01	—	1.06-0.99	—	
Southern Cypress	31.4-32.1	0.90-0.92	—	1.11-1.09	—	
Hem-Fir, Spruce-Pine-Fir	24.5-31.4	0.74-0.90	—	1.35-1.11	—	
West Coast Woods, Cedars	21.7-31.4	0.68-0.90	—	1.48-1.11	—	
California Redwood	24.5-28.0	0.74-0.82	—	1.35-1.22	—	

Notes for Table 4

[a]Values are for a mean temperature of 75°F. Representative values for dry materials are intended as design (not specification) values for materials in normal use. Thermal values of insulating materials may differ from design values depending on their in-situ properties (e.g., density and moisture content, orientation, etc.) and variability experienced during manufacture. For properties of a particular product, use the value supplied by the manufacturer or by unbiased tests.

[b]To obtain thermal conductivities in Btu/h·ft·°F, divide the k-factor by 12 in/ft.

[c]Resistance values are the reciprocals of C before rounding off C to two decimal places.

[d]Lewis (1967).

[e]U.S. Department of Agriculture (1974).

[f]Does not include paper backing and facing, if any. Where insulation forms a boundary (reflective or otherwise) of an airspace, see Tables 2 and 3 for the insulating value of an airspace with the appropriate effective emittance and temperature conditions of the space.

[g]Conductivity varies with fiber diameter. (See Chapter 22, Factors Affecting Thermal Performance.) Batt, blanket, and loose-fill mineral fiber insulations are manufactured to achieve specified R-values, the most common of which are listed in the table. Due to differences in manufacturing processes and materials, the product thicknesses, densities, and thermal conductivities vary over considerable ranges for a specified R-value.

[h]This material is relatively new and data are based on limited testing.

[i]For additional information, see Society of Plastics Engineers (SPI) *Bulletin* U108. Values are for aged, unfaced board stock. For change in conductivity with age of expanded polyurethane/polyisocyanurate, see Chapter 22, Factors Affecting Thermal Performance.

[j]Values are for aged products with gas-impermeable facers on the two major surfaces. An aluminum foil facer of 0.001 in. thickness or greater is generally considered impermeable to gases. For change in conductivity with age of expanded polyisocyanurate, see Chapter 22, Factors Affecting Thermal Performance, and SPI *Bulletin* U108.

[k]Cellular phenolic insulation may no longer be manufactured. The thermal conductivity and resistance values do not represent aged insulation, which may have a higher thermal conductivity and lower thermal resistance.

[l]Insulating values of acoustical tile vary, depending on density of the board and on type, size, and depth of perforations.

[m]Cavity is framed with 0.75 in. wood furring strips. Caution should be used in applying this value for other framing materials. The reported value was derived from tests and applies to the reflective path only. The effect of studs or furring strips must be included in determining the overall performance of the wall.

[n]Values for fully grouted block may be approximated using values for concrete with a similar unit weight.

[o]Values for concrete block and concrete are at moisture contents representative of normal use.

[p]Values for metal or vinyl siding applied over flat surfaces vary widely, depending on amount of ventilation of airspace beneath the siding; whether airspace is reflective or nonreflective; and on thickness, type, and application of insulating backing used. Values are averages for use as design guides, and were obtained from several guarded hot box tests (ASTM C 236) or calibrated hot box (ASTM C 976) on hollow-backed types and types made using backing-boards of wood fiber, foamed plastic, and glass fiber. Departures of ±50% or more from these values may occur.

[q]Vinyl specific heat = 0.25 Btu/lb·°F

[r]See Adams (1971), MacLean (1941), and Wilkes (1979). The conductivity values listed are for heat transfer across the grain. The thermal conductivity of wood varies linearly with the density, and the density ranges listed are those normally found for the wood species given. If the density of the wood species is not known, use the mean conductivity value. For extrapolation to other moisture contents, the following empirical equation developed by Wilkes (1979) may be used:

$$k = 0.1791 + \frac{(1.874 \times 10^{-2} + 5.753 \times 10^{-4} M)\rho}{1 + 0.01M}$$

where ρ is density of the moist wood in lb/ft^3, and M is the moisture content in percent.

[s]From Wilkes (1979), an empirical equation for the specific heat of moist wood at 75°F is as follows:

$$c_p = \frac{(0.299 + 0.01M)}{(1 + 0.01M)} + \Delta c_p$$

where Δc_p accounts for the heat of sorption and is denoted by

$$\Delta c_p = M(1.921 \times 10^{-3} - 3.168 \times 10^{-5} M)$$

where M is the moisture content in percent by mass.

Example 1. Calculate the U-factor of the 2 by 4 stud wall shown in Figure 2. The studs are at 16 in. OC. There is 3.5 in. mineral fiber batt insulation (R-13) in the stud space. The inside finish is 0.5 in. gypsum wallboard; the outside is finished with rigid foam insulating sheathing (R-4) and 0.5 in. by 8 in. wood bevel lapped siding. The insulated cavity occupies approximately 75% of the transmission area; the studs, plates, and sills occupy 21%; and the headers occupy 4%.

Solution. Obtain the R-values of the various building elements from Tables 1 and 4. Assume the R = 1.25 per inch for the wood framing. Also, assume the headers are solid wood, in this case, and group them with the studs, plates, and sills.

Element	R (Insulated Cavity)	R (Studs, Plates, and Headers)
1. Outside surface, 15 mphwind	0.17	0.17
2. Wood bevel lapped siding	0.81	0.81
3. Rigid foam insulating sheathing	4.0	4.0
4. Mineral fiber batt insulation, 3.5 in.	13.0	—
5. Wood stud, nominal 2 × 4	—	4.38
6. Gypsum wallboard, 0.5 in.	0.45	0.45
7. Inside surface, still air	0.68	0.68
	R_1 = 19.11	R_2 = 10.49

Since the U-factor is the reciprocal of R-value, U_1 = 0.052 and U_2 = 0.095 Btu/h·ft^2·°F.

If the wood framing (thermal bridging) is not included, Equation (3) from Chapter 22 may be used to calculate the U-factor of the wall as follows:

$$U_{av} = U_1 = \frac{1}{R_1} = 0.052 \text{ Btu/h} \cdot \text{ft}^2 \cdot {}^\circ\text{F}$$

If the wood framing is accounted for using the parallel-path flow method, the U-factor of the wall is determined using Equation (5) from Chapter 22 as follows:

$$U_{av} = (0.75 \times 0.052) + (0.25 \times 0.095) = 0.063 \text{ Btu/h} \cdot \text{ft}^2 \cdot {}^\circ\text{F}$$

If the wood framing is included using the isothermal planes method, the U-factor of the wall is determined using Equations (2) and (3) from Chapter 22 as follows:

$$R_{T(av)} = 4.98 + 1/[(0.75/13.0) + (0.25/4.38)] + 1.13$$

$$= 14.82 {}^\circ\text{F} \cdot \text{ft}^2 \cdot \text{h/Btu}$$

$$U_{av} = 0.067 \text{ Btu/h} \cdot \text{ft}^2 \cdot {}^\circ\text{F}$$

For a frame wall with a 24-in. OC stud space, the average overall R-value is 15.18°F·ft^2·h/Btu. Similar calculation procedures may be used to evaluate other wall designs, except those with thermal bridges.

Masonry Walls

The average overall R-values of masonry walls can be estimated by assuming a combination of layers in series, one or more of which provides parallel paths. This method is used because heat flows laterally through block face shells so that transverse isothermal planes result. Average total resistance $R_{T(av)}$ is the sum of the resistances of

the layers between such planes, each layer calculated as shown in Example 2.

Example 2. Calculate the overall thermal resistance and average U-factor of the 7-5/8-in. thick insulated concrete block wall shown in Figure 3. The two-core block has an average web thickness of 1-in. and a face shell thickness of 1-1/4-in. Overall block dimensions are 7-5/8 by 7-5/8 by 15-5/8 in. Measured thermal resistances of 112 lb/ft^3 concrete and 7 lb/ft^3 expanded perlite insulation are 0.10 and 2.90°F·ft^2·h/Btu per inch, respectively.

Solution. The equation used to determine the overall thermal resistance of the insulated concrete block wall is derived from Equations (2) and (5) from Chapter 22 and is given below:

$$R_{T(av)} = R_i + R_f + \left(\frac{a_w}{R_w} + \frac{a_c}{R_c}\right)^{-1} + R_o$$

where

$R_{T(av)}$ = overall thermal resistance based on assumption of isothermal planes
R_i = thermal resistance of inside air surface film (still air)
R_o = thermal resistance of outside air surface film (15 mph wind)
R_f = total thermal resistance of face shells
R_c = thermal resistance of cores between face shells
R_w = thermal resistance of webs between face shells
a_w = fraction of total area transverse to heat flow represented by webs of blocks
a_c = fraction of total area transverse to heat flow represented by cores of blocks

From the information given and the data in Table 1, determine the values needed to compute the overall thermal resistance.

R_i = 0.68
R_o = 0.17
R_f = (2)(1.25)(0.10) = 0.25
R_c = (5.125)(2.90) = 14.86
R_w = (5.125)(0.10) = 0.51
a_w = 3/15.625 = 0.192
a_c = 12.625/15.625 = 0.808

Using the equation given, the overall thermal resistance and average U-factor are calculated as follows:

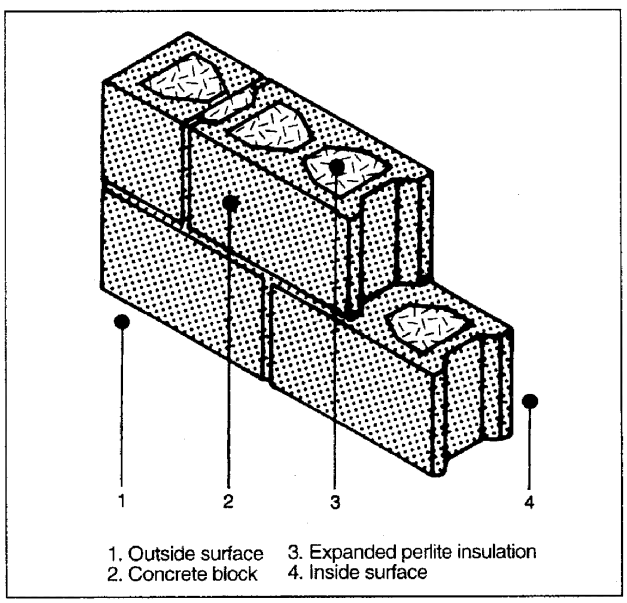

Fig. 3 Insulated Concrete Block Wall (Example 2)

$$R_{T(av)} = 0.68 + 0.25 + \frac{0.51 \times 14.86}{(0.808 \times 0.51) + (0.192 \times 14.86)} + 0.17$$

$$= 3.43°F \cdot ft^2 \cdot h/Btu$$

$$U_{av} = 1/3.43 = 0.29\ Btu/h \cdot ft^2 \cdot °F$$

Based on guarded hot box tests of this wall without mortar joints, Tye and Spinney (1980) measured the average R-value for this insulated concrete block wall as 3.13°F·ft^2·h/Btu.

Assuming parallel heat flow only, the calculated resistance is higher than that calculated on the assumption of isothermal planes. The actual resistance generally is some value between the two calculated values. In the absence of test values, examination of the construction usually reveals whether a value closer to the higher or lower calculated R-value should be used. Generally, if the construction contains a layer in which lateral conduction is high compared with transmittance through the construction, the calculation with isothermal planes should be used. If the construction has no layer of high lateral conductance, the parallel heat flow calculation should be used.

Hot box tests of insulated and uninsulated masonry walls constructed with block of conventional configuration show that thermal resistances calculated using the isothermal planes heat flow method agree well with measured values (Van Geem 1985, Valore 1980, Shu et al. 1979). Neglecting horizontal mortar joints in conventional block can result in thermal transmittance values up to 16% lower than actual, depending on the density and thermal properties of the masonry, and 1 to 6% lower, depending on the core insulation material (Van Geem 1985, McIntyre 1984). For aerated concrete block walls, other solid masonry, and multicore block walls with full mortar joints, neglecting mortar joints can cause errors in R-values up to 40% (Valore 1988). Horizontal mortar joints usually found in concrete block wall construction are neglected in Example 2.

Constructions Containing Metal

Curtain and metal stud-wall constructions often include metallic and other thermal bridges, which can significantly reduce the thermal resistance. However, the capacity of the adjacent facing materials to transmit heat transversely to the metal is limited, and some contact resistance between all materials in contact limits the reduction. Contact resistances in building structures are only 0.06 to 0.6°F·ft^2·h/Btu—too small to be of concern in many cases. However, the contact resistances of steel framing members may be important. Also, in many cases (as illustrated in Example 3), the area of metal in contact with the facing greatly exceeds the thickness of the metal, which mitigates the contact reistance effects.

Thermal characteristics for panels of sandwich construction can be computed by combining the thermal resistances of the various layers. However, few panels are true sandwich constructions; many have ribs and stiffeners that create complicated heat flow paths. R-values for the assembled sections should be determined on a representative sample by using a hot box method. If the sample is a wall section with air cavities on both sides of fibrous insulation, the sample must be of representative height since convective airflow can contribute significantly to heat flow through the test section. Computer modeling can also be useful, but all heat transfer mechanisms must be considered.

In Example 3, the metal member is only 0.020 in. thick, but it is in contact with adjacent facings over a 1.25 in.-wide area. The steel member is 3.50 in. deep, has a thermal resistance of approximately 0.011°F·ft^2·h/Btu, and is virtually isothermal. The calculation involves careful selection of the appropriate thickness for the steel member. If the member is assumed to be 0.020 in. thick, the fact that the flange transmits heat to the adjacent facing is ignored, and the heat flow through the steel is underestimated. If the member is assumed to be 1.25 in. thick, the heat flow through the steel is overestimated. In Example 3, the steel member behaves in much the

same way as a rectangular member 1.25 in. thick and 3.50 in. deep with a thermal resistance of (1.25/0.020) × 0.011 = 0.69°F·ft²·h/Btu does. The Building Research Association of New Zealand (BRANZ) commonly uses this approximation.

Example 3. Calculate the C-factor of the insulated steel frame wall shown in Figure 4. Assume that the steel member has an R-value of 0.69°F·ft²·h/Btu and that the framing behaves as though it occupies approximately 8% of the transmission area.

Solution. Obtain the R-values of the various building elements from Table 4.

Element	*R* (Insul.)	*R* (Framing)
1. 0.5-in. gypsum wallboard	0.45	0.45
2. 3.5-in. mineral fiber batt insulation	11	—
3. Steel framing member	—	0.69
4. 0.5-in. gypsum wallboard	0.45	0.45
	$R_1 = 11.90$	$R_2 = 1.59$

Therefore, $C_1 = 0.084$; $C_2 = 0.629$ Btu/h·ft²·°F.

If the steel framing (thermal bridging) is not considered, the C-factor of the wall is calculated using Equation (3) from Chapter 22 as follows:

$$C_{av} = C_1 = 1/R_1 = 0.084 \text{ Btu/h} \cdot \text{ft}^2 \cdot {}^\circ\text{F}$$

If the steel framing is accounted for using the parallel flow method, the C-factor of the wall is determined using Equation (5) from Chapter 22 as follows:

$$C_{av} = (0.92 \times 0.084) + (0.08 \times 0.629)$$

$$= 0.128 \text{ Btu/h} \cdot \text{ft}^2 \cdot {}^\circ\text{F}$$

$$R_{T(av)} = 7.81\,{}^\circ\text{F} \cdot \text{ft}^2 \cdot \text{h/Btu}$$

If the steel framing is included using the isothermal planes method, the C-factor of the wall is determined using Equations (2) and (3) from Chapter 22 as follows:

$$R_{T(av)} = 0.45 + 1/[(0.92/11.00) + (0.08/0.69)] + 0.45$$

$$= 5.91\,{}^\circ\text{F} \cdot \text{ft}^2 \cdot \text{h/Btu}$$

$$C_{av} = 0.169 \text{ Btu/h} \cdot \text{ft}^2 \cdot {}^\circ\text{F}$$

For this insulated steel frame wall, Farouk and Larson (1983) measured an average R-value of 6.61°F·ft²·h/Btu.

In ASHRAE/IESNA *Standard* 90.1-1989, one method given for determining the thermal resistance of wall assemblies containing metal framing involves using a parallel path correction factor F_c, which is listed in Table 8C-2 of the standard. For 2 by 4 steel framing, 16 in. OC, $F_c = 0.50$. Using the correction factor method, an R-value of 6.40°F·ft²·h/Btu [0.45 + 11(0.50) + 0.45] is obtained for the wall described in Example 3.

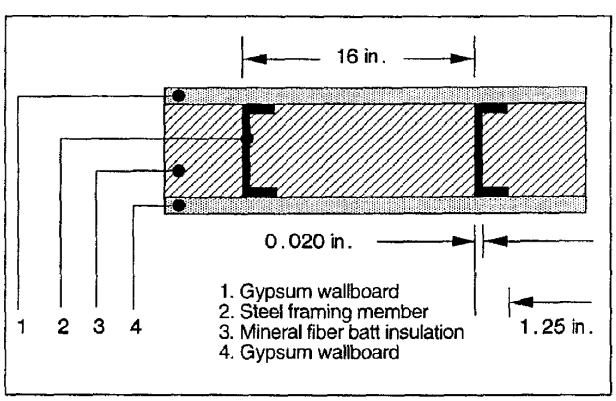

Fig. 4 Insulated Steel Frame Wall (Example 3)

Zone Method of Calculation

For structures with widely spaced metal members of substantial cross-sectional area, calculation by the isothermal planes method can result in thermal resistance values that are too low. For these constructions, the **zone method** can be used. This method involves two separate computations—one for a chosen limited portion, Zone A, containing the highly conductive element; the other for the remaining portion of simpler construction, Zone B. The two computations are then combined using the parallel flow method, and the average transmittance per unit overall area is calculated. The basic laws of heat transfer are applied by adding the area conductances *CA* of elements in parallel, and adding area resistances *R/A* of elements in series.

The surface shape of Zone A is determined by the metal element. For a metal beam (see Figure 5), the Zone A surface is a strip of width *W* that is centered on the beam. For a rod perpendicular to panel surfaces, it is a circle of diameter *W*. The value of *W* is calculated from Equation (1), which is empirical. The value of *d* should not be less than 0.5 in. for still air.

$$W = m + 2d \tag{1}$$

where

m = width or diameter of metal heat path terminal, in.
d = distance from panel surface to metal, in.

Generally, the value of *W* should be calculated using Equation (1) for each end of the metal heat path; the larger value, within the limits of the basic area, should be used as illustrated in Example 4.

Example 4. Calculate transmittance of the roof deck shown in Figure 5. Tee-bars at 24 in. OC support glass fiber form boards, gypsum concrete, and built-up roofing. Conductivities of components are: steel, 314.4 Btu·in/h·ft²·°F; gypsum concrete, 1.66 Btu·in/h·ft²·°F; and glass fiber form board, 0.25 Btu·in/h·ft²·°F. Conductance of built-up roofing is 3.00 Btu/h·ft²·°F.

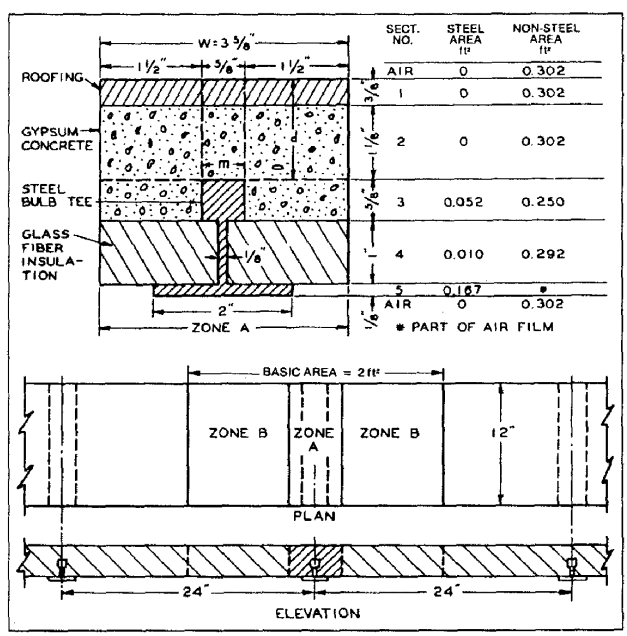

Fig. 5 Gypsum Roof Deck on Bulb Tees (Example 4)

Solution. The basic area is 2 ft^2 (24 in. by 12 in.) with a tee-bar (12 in. long) across the middle. This area is divided into Zones A and B.

Zone A is determined from Equation (1) as follows:

$$\text{Top side } W = m + 2d = 0.625 + (2 \times 1.5) = 3.625 \text{ in.}$$
$$\text{Bottom side } W = m + 2d = 2.0 + (2 \times 0.5) = 3.0 \text{ in.}$$

Using the larger value of W, the area of Zone A is $(12 \times 3.625)/144 = 0.302$ ft^2. The area of Zone B is $2.0 - 0.302 = 1.698$ ft^2.

To determine area transmittance for Zone A, divide the structure within the zone into five sections parallel to the top and bottom surfaces (Figure 5). The area conductance CA of each section is calculated by adding the area conductances of its metal and nonmetal paths. Area conductances of the sections are converted to area resistances R/A and added to obtain the total resistance of Zone A.

Section	Area × Conductance =	CA	$\frac{1}{CA} = \frac{R}{A}$
Air (outside, 15 mph)	0.302 × 6.00	1.81	0.55
No. 1, Roofing	0.302 × 3.00	0.906	1.10
No. 2, Gypsum concrete	0.302 × 1.66/1.125	0.446	2.24
No. 3, Steel	0.052 × 314.4/0.625	26.2	0.04
No. 3, Gypsum concrete	0.250 × 1.66/0.625	0.664	
No. 4, Steel	0.010 × 314.4/1.00	3.14	0.31
No. 4, Glass fiberboard	0.292 × 0.25/1.00	0.073	
No. 5, Steel	0.167 × 314.4/0.125	420.0	0.002
Air (inside)	0.302 × 1.63	0.492	2.03
		Total R/A = 6.27	

Area transmittance of Zone A = $1/(R/A) = 1/6.27 = 0.159$.

For Zone B, the unit resistances are added and then converted to area transmittance, as shown in the following table.

Section	Resistance, R
Air (outside, 15 mph)	1/6.00 = 0.17
Roofing	1/3.00 = 0.33
Gypsum concrete	1.75/1.66 = 1.05
Glass fiberboard	1.00/0.25 = 4.00
Air (inside)	1/1.63 = 0.61
Total resistance	= 6.16

Since unit transmittance = $1/R = 0.162$, the total area transmittance UA is calculated as follows:

$$\begin{aligned} \text{Zone B} = 1.698 \times 0.162 &= 0.275 \\ \text{Zone A} &= \underline{0.159} \\ \text{Total area transmittance of basic area} &= 0.434 \\ \text{Transmittance per ft}^2 = 0.434/2.0 &= 0.217 \\ \text{Resistance per ft}^2 &= 4.61 \end{aligned}$$

Overall R-values of 4.57 and 4.85°F·ft^2·h/Btu have been measured in two guarded hot box tests of a similar construction.

When the steel member represents a relatively large proportion of the total heat flow path, as in Example 4, detailed calculations of resistance in sections 3, 4, and 5 of Zone A are unnecessary; if only the steel member is considered, the final result of Example 4 is the same. However, if the heat flow path represented by the steel member is small, as for a tie rod, detailed calculations for sections 3, 4, and 5 are necessary. A panel with an internal metallic structure and bonded on one or both sides to a metal skin or covering presents special problems of lateral heat flow not covered in the zone method.

Modified Zone Method for Metal Stud Walls with Insulated Cavities

The modified zone method is similar to the parallel path method and the zone method. All three methods are based on parallel-path calculations. Figure 6 shows the width w of the zone of thermal anomalies around a metal stud. This zone can be assumed to equal the length of the stud flange L (parallel path method), or can be calculated as a sum of the length of stud flange and a distance double that from wall surface to metal Σd_i (zone method). In the modified zone method the width of the zone depends on the following three parameters:

- Ratio between thermal resistivity of sheathing material and cavity insulation
- Size (depth) of stud
- Thickness of sheathing material

The Modified Zone Method is explained in Figure 6 (which can be copied and used as a calculation form). The wall cross section shown in Figure 6, is divided into two zones: the zone of thermal anomalies around metal stud w and the cavity zone cav. Wall material layers are grouped into an exterior and interior surface sections—A (sheathing, siding) and B (wallboard)—and interstitial sections I and II (cavity insulation, metal stud flange).

Assuming that the layers or layer of wall materials in wall section A are thicker than those in wall section B, as show by the cross section in Figure 6, they can be described as follows:

$$\sum_{i=1}^{n} d_i \geq \sum_{j=1}^{m} d_j \tag{2}$$

where

n = number of material layer (of thickness d_i) between metal stud flange and wall surface for section A
m = number of material layer (of thickness d_j) for section B

Then, the width of the zone of thermal anomalies around the metal stud w can be estimated by

$$w = L + z_f \sum_{i=1}^{n} d_i \tag{3}$$

where

L = stud flange size,
d_i = thickness of material layer in section A
z_f = zone factor, which is shown in Figure 7 ($z_f = 2$ for zone method)

Kosny and Christian (1995) verified the accuracy of the Modified Zone Method for over 200 simulated cases of metal frame walls with insulated cavities. For all configurations considered the discrepancy between results were within ±2%. Hot box measured R-values for 15 metal stud walls tested by Barbour et al. (1994) were compared with results obtained by Kosny and Christian (1995) and McGowan and Desjarlais (1997). The Modified Zone Method was found to be the most accurate simple method for estimating the clear wall R-value of light-gage steel stud walls with insulated cavities. However, this analysis does not apply to construction with metal sheathing. Also, *ASHRAE Standard* 90.1 may require a different method of analysis.

Ceilings and Roofs

The overall R-value for ceilings of wood frame flat roofs can be calculated using Equations (1) through (5) from Chapter 22. Properties of the materials are found in Tables 1, 3, 2, and 4. The fraction of framing is assumed to be 0.10 for joists at 16 in. OC and 0.07 for joists at 24 in. OC. The calculation procedure is similar to that shown in Example 1. Note that if the ceiling contains plane air spaces (see Table 3), the resistance depends on the direction of heat flow, i.e., whether the calculation is for a winter (heat flow up) or summer (heat flow down) condition.

For ceilings of pitched roofs under winter conditions, calculate the R-value of the ceiling using the procedure for flat roofs. Table 5 can be used to determine the effective resistance of the

Table 10 Typical Thermal Conductivity for Industrial Insulations at Various Mean Temperatures—Design Values[a]

Material	Max. Temp.,[b] °F	Typical Density, lb/ft³	Typical Conductivity in Btu·in/h·ft²·°F at Mean Temp., °F													
			−100	−75	−50	−25	0	25	50	75	100	200	300	500	700	900
BLANKETS AND FELTS																
ALUMINOSILICATE FIBER																
7 to 10 µm diameter fiber	1800	4								0.24		0.32		0.54	0.99	1.03
	2000	6-8								0.25		0.30		0.48	0.78	0.95
3 µm diameter fiber	2200	4								0.22		0.29		0.45	0.59	0.74
MINERAL FIBER (Rock, slag, or glass)																
Blanket, metal reinforced	1200	6-12									0.26	0.32	0.39	0.54		
	1000	2.5-6									0.24	0.31	0.40	0.61		
Blanket, flexible, fine-fiber organic bonded	350	0.75				0.25	0.26	0.28	0.30	0.33	0.36	0.53				
		0.75				0.24	0.25	0.27	0.29	0.32	0.34	0.48				
		1.0				0.23	0.24	0.25	0.27	0.29	0.32	0.43				
		1.5				0.21	0.22	0.23	0.25	0.27	0.28	0.37				
		2.0				0.20	0.21	0.22	0.23	0.25	0.26	0.33				
		3.0				0.19	0.20	0.21	0.22	0.23	0.24	0.31				
Blanket, flexible, textile fiber, organic bonded	350	0.65				0.27	0.28	0.29	0.30	0.31	0.32	0.50	0.68			
		0.75				0.26	0.27	0.28	0.29	0.31	0.32	0.48	0.66			
		1.0				0.24	0.25	0.26	0.27	0.29	0.31	0.45	0.60			
		1.5				0.22	0.23	0.24	0.25	0.27	0.29	0.39	0.51			
		3.0				0.20	0.21	0.22	0.23	0.24	0.25	0.32	0.41			
Felt, semirigid organic bonded	400	3-8						0.24	0.25	0.26	0.27	0.35	0.44			
Laminated and felted without binder	850	3	0.16	0.17	0.18	0.19	0.20	0.21	0.22	0.23	0.24	0.35	0.55			
	1200	7.5											0.35	0.45	0.60	
BLOCKS, BOARDS, AND PIPE INSULATION																
MAGNESIA	600	11-12									0.35	0.38	0.42			
85% CALCIUM SILICATE	1200	11-15									0.38	0.41	0.44	0.52	0.62	0.72
	1800	12-15												0.63	0.74	0.95
CELLULAR GLASS	900	7.8-8.2	0.24	0.25	0.26	0.28	0.29	0.30	0.32	0.33	0.34	0.41	0.49	0.70	1.01	
DIATOMACEOUS SILICA	1600	21-22												0.64	0.68	0.72
	1900	23-25												0.70	0.75	0.80
MINERAL FIBER (Glass)																
Organic bonded, block and boards	400	3-10	0.16	0.17	0.18	0.19	0.20	0.22	0.24	0.25	0.26	0.33	0.40			
Nonpunking binder	1000	3-10									0.26	0.31	0.38	0.52		
Pipe insulation, slag, or glass	350	3-4					0.20	0.21	0.22	0.23	0.24	0.29				
	500	3-10					0.20	0.22	0.24	0.25	0.26	0.33	0.40			
Inorganic bonded block	1000	10-15									0.33	0.38	0.45	0.55		
	1800	15-24									0.32	0.37	0.42	0.52	0.62	0.74
Pipe insulation, slag, or glass	1000	10-15									0.33	0.38	0.45	0.55		
Resin binder		15	0.23	0.24	0.25	0.26	0.28	0.29								
RIGID POLYSTYRENE																
Extruded (CFC-12 exp.)(smooth skin surface)	165	1.8-3.5	0.16	0.16	0.17	0.16	0.17	0.18	0.19	0.20						
Molded beads	165	1	0.17	0.19	0.20	0.21	0.22	0.24	0.25	0.26	0.28					
		1.25	0.17	0.18	0.19	0.20	0.22	0.23	0.24	0.25	0.27					
		1.5	0.16	0.17	0.19	0.20	0.21	0.22	0.23	0.24	0.26					
		1.75	0.16	0.17	0.18	0.19	0.20	0.22	0.23	0.24	0.25					
		2.0	0.15	0.16	0.18	0.19	0.20	0.21	0.22	0.23	0.24					
RIGID POLYURETHANE/POLYISOCYANURATE[c,d]																
Unfaced (CFC-11 exp.)	210	1.5-2.5	0.16	0.17	0.18	0.18	0.18	0.17	0.16	0.16	0.17					
RIGID POLYISOCYANURATE																
Gas-impermeable facers (CFC-11 exp.)	250	2.0						0.12	0.13	0.14	0.15					
RIGID PHENOLIC																
Closed cell (CFC-11, CFC-113 exp.)		3.0						0.11	0.115	0.12	0.125					
RUBBER, Rigid foamed	150	4.5						0.20	0.21	0.22	0.23					
VEGETABLE AND ANIMAL FIBER																
Wool felt (pipe insulation)	180	20						0.28	0.30	0.31	0.33					
INSULATING CEMENTS																
MINERAL FIBER (Rock, slag, or glass)																
With colloidal clay binder	1800	24-30									0.49	0.55	0.61	0.73	0.85	
With hydraulic setting binder	1200	30-40									0.75	0.80	0.85	0.95		
LOOSE FILL																
Cellulose insulation (milled pulverized paper or wood pulp)		2.5-3							0.26	0.27	0.29					
Mineral fiber, slag, rock, or glass		2-5			0.19	0.21	0.23	0.25	0.26	0.28	0.31					
Perlite (expanded)		3-5	0.22	0.24	0.25	0.27	0.28	0.30	0.31	0.33	0.35					
Silica aerogel		7.6			0.13	0.14	0.15	0.15	0.16	0.17	0.18					
Vermiculite (expanded)		7-8.2			0.39	0.40	0.42	0.44	0.45	0.47	0.49					
		4-6			0.34	0.35	0.38	0.40	0.42	0.44	0.46					

[a]Representative values for dry materials, which are intended as design (not specification) values for materials in normal use. Insulation materials in actual service may have thermal values that vary from design values depending on their in-situ properties (e.g., density and moisture content). For properties of a particular product, use the value supplied by the manufacturer or by unbiased tests.

[b]These temperatures are generally accepted as maximum. When operating temperature approaches these limits, follow the manufacturers' recommendations.

[c]Some polyurethane foams are formed by means that produce a stable product (with respect to *k*), but most are blown with refrigerant and will change with time.

[d]See Table 4, footnote i.

[e]See Table 4, footnote j.

Thermal and Water Vapor Transmission Data 24.19

Table 11A Heat Loss from Bare Steel Pipe to Still Air at 80°F[a], Btu/h·ft

Nominal Pipe Size[b], in.	Pipe Inside Temperature, °F									
	180	280	380	480	580	680	780	880	980	1080
0.50	59.3	147.2	263.2	412.3	600.9	836.8	1128.6	1485.6	1918.0	2436.8
0.75	72.5	180.1	322.6	506.2	739.2	1031.2	1392.9	1836.0	2373.5	3018.8
1.00	88.8	220.8	396.1	622.7	910.9	1272.6	1721.2	2271.5	2939.4	3741.6
1.25	109.7	272.8	490.4	772.3	1131.7	1583.8	2145.6	2835.4	3673.4	4680.9
1.50	123.9	308.5	555.1	875.1	1283.8	1798.3	2438.2	3224.6	4180.5	5330.0
2.00	151.8	378.1	681.4	1076.3	1581.5	2218.9	3012.6	3989.2	5177.2	6606.8
2.50	180.5	450.0	811.9	1284.0	1888.8	2652.6	3604.3	4775.3	6199.5	7912.5
3.00	215.9	538.8	973.5	1541.8	2271.4	3194.0	4344.9	5762.2	7486.9	9562.3
3.50	243.9	609.0	1101.4	1746.1	2574.7	3623.6	4933.0	6546.4	8510.4	10874.3
4.00	271.6	678.6	1228.2	1948.7	2875.9	4050.5	5517.5	7326.0	9528.1	12178.9
4.50	299.2	747.7	1354.4	2150.9	3176.8	4477.7	6103.8	8109.5	10553.2	13496.2
5.00	329.8	824.7	1494.8	2375.4	3510.6	4950.7	6751.3	8972.5	11678.4	14936.3
6.00	387.1	968.7	1757.8	2796.8	4138.0	5841.4	7972.7	10603.1	13808.2	17667.6
7.00	440.5	1102.8	2003.0	3189.9	4723.9	6673.5	9114.2	12127.4	15799.4	20220.8
8.00	493.3	1235.7	2246.1	3580.0	5305.5	7500.0	10248.4	13642.2	17778.2	22758.0
9.00	545.9	1368.1	2488.8	3970.2	5888.7	8331.0	11392.1	15174.5	19787.1	25343.6
10.00	604.3	1514.8	2757.2	4400.7	6530.1	9241.1	12638.6	16835.1	21949.2	28104.9
11.00	656.0	1644.8	2995.5	4783.8	7102.1	10054.9	13756.2	18328.4	23900.3	30606.1
12.00	704.0	1762.3	3203.8	5104.9	7557.3	10661.8	14524.9	19256.7	24967.6	31766.8
14.00	771.0	1934.2	3525.9	5636.0	8373.9	11862.4	16235.5	21635.6	28212.3	36120.3
16.00	872.2	2189.0	3993.2	6387.4	9495.9	13458.0	18424.8	24556.6	32021.1	40990.7
18.00	972.5	2441.7	4456.7	7132.9	10609.4	15041.3	20596.7	27453.2	35795.6	45813.1
20.00	1072.1	2692.4	4916.8	7873.2	11715.1	16613.4	22752.5	30326.8	39537.6	50590.0
24.00	1269.3	3188.9	5828.3	9339.9	13905.5	19726.9	27019.7	36010.1	46930.3	60014.7

Table 11B Heat Loss from Flat Surfaces to Still Air at 80°F, Btu/h·ft²

	Surface Inside Temperature, °F									
	180	280	380	480	580	680	780	880	980	1080
Vertical surface	212.2	533.1	973.3	1558.6	2321.2	3298.0	4530.1	6062.8	7945.5	10231.5
Horizontal surface										
Facing up	234.7	586.4	1061.1	1683.5	2484.9	3501.9	4775.4	6350.4	8276.3	10606.1
Facing down	183.6	465.3	861.4	1399.6	2112.8	3038.4	4217.8	5696.7	7524.5	9754.7

[a]Calculations from ASTM C 680; steel: $k = 314.4$ Btu·in/h·ft²·°F; $\varepsilon = 0.94$.

[b]Losses per square foot of pipe for pipes larger than 24 in. can be considered the same as losses per square foot for 24-in. pipe.

cylindrical surfaces. Figure 9 shows surface resistance as a function of heat transmission for both flat and cylindrical surfaces. The surface emittance is assumed to be 0.85 to 0.90 in still air at 80°F.

Example 7. Compute the heat loss from a boiler wall if the interior insulation surface temperature is 1100°F and ambient still air temperature is 80°F. The wall is insulated with 4.5 in. of mineral fiber block and 0.5 in. of mineral fiber insulating and finishing cement.

Solution. Assume that the mean temperature of the mineral fiber block is 700°F, the mean temperature of the insulating cement is 200°F, and the surface resistance R_s is 0.60 ft²·°F·h/Btu.

From Table 10, $k_1 = 0.62$ and $k_2 = 0.80$. Using Equation (9) from Chapter 22:

$$q_s = \frac{1100 - 80}{(4.5/0.62) + (0.5/0.80) + 0.60} = 120.2 \text{ Btu/h} \cdot \text{ft}^2$$

As a check, from Figure 9, at 120.2 Btu/h·ft², $R_s = 0.56$. The mean temperature of the mineral fiber block is:

$$4.5/0.62 = 7.26;\ 7.26/2 = 3.63$$

$$1100 - \frac{3.63}{8.48}(1020) = 663°\text{F}$$

and the mean temperature of the insulating cement is:

$$0.5/0.80 = 0.63;\ 0.63/2 = 0.31;\ 7.26 + 0.31 = 7.57$$

$$1100 - \frac{7.57}{8.48}(1020) = 189°\text{F}$$

From Table 10, at 663°F, $k_1 = 0.60$; at 189°F, $k_2 = 0.79$.

Using these adjusted values to recalculate q_s:

$$q_s = \frac{1020}{(4.5/0.60) + (0.5/0.79) + 0.56} = \frac{1020}{8.69}$$

$$= 117.4 \text{ Btu/h} \cdot \text{ft}^2$$

From Figure 9, at 117.4 Btu/h·ft², $R_s = 0.56$. The mean temperature of the mineral fiber block is:

$$4.5/0.6 = 7.50;\ 7.50/2 = 3.75$$

$$1100 - \frac{3.75}{8.69}(1020) = 660°\text{F}$$

and the mean temperature of the insulating cement is:

$$0.5/0.79 = 0.63;\ 0.63/2 = 0.31;\ 7.50 + 0.31 = 7.81$$

$$1100 - \frac{7.81}{8.69}(1020) = 183°\text{F}$$

From Table 10, at 660°F, $k_1 = 0.60$; at 183°F, $k_2 = 0.79$.

Since R_s, k_1, and k_2 do not change at these values, $q_s = 117.4$ Btu/h·ft.

Example 8. Compute heat loss per square foot of outer surface of insulation if pipe temperature is 1200°F and ambient still air temperature is 80°F. The pipe is nominal 6-in. steel pipe, insulated with a nominal 3-in. thick diatomaceous silica as the inner layer and a nominal 2-in. thick calcium silicate as the outer layer.

Table 12 Heat Loss from Bare Copper Tube to Still Air at 80°F[a], Btu/h·ft

Nominal Tube Size, in.	Tube Inside Temperature, °F								
	120	150	180	210	240	270	300	330	
0.250	7.1	14.1	21.9	30.6	39.9	49.9	60.6	71.9	Dull ε = 0.44
0.375	9.1	18.0	28.1	39.1	51.1	63.9	77.6	92.2	
0.500	11.0	21.8	34.0	47.4	61.9	77.5	94.1	111.8	
0.750	14.7	29.1	45.4	63.3	82.7	103.6	126.0	149.8	
1.000	18.3	36.2	56.4	78.7	102.8	128.9	156.7	186.5	
1.250	21.8	43.1	67.2	93.6	122.4	153.4	186.7	222.2	
1.500	25.2	49.8	77.6	108.3	141.5	177.4	216.0	257.1	
2.000	31.8	62.9	98.0	136.7	178.8	224.3	273.1	325.4	
2.500	38.3	75.6	117.9	164.4	215.1	269.8	328.7	391.8	
3.000	44.6	88.1	137.2	191.5	250.5	314.4	383.2	456.9	
3.500	50.8	100.3	156.3	218.0	285.4	358.2	436.7	520.8	
4.000	57.0	112.3	175.0	244.2	319.7	401.4	489.4	583.9	
5.000	69.0	135.9	211.7	295.5	386.9	486.0	592.8	707.6	
6.000	80.7	159.0	247.7	345.7	452.8	568.9	694.2	829.0	
8.000	103.7	204.1	317.8	443.7	581.3	730.7	892.1	1066.0	
10.000	126.1	247.9	386.1	539.1	706.5	888.4	1085.2	1297.4	
12.000	148.0	290.9	453.0	632.5	829.2	1043.1	1274.6	1524.4	
0.250	5.4	10.8	16.9	23.5	30.5	37.9	45.5	53.5	Bright ε = 0.08
0.375	6.8	13.7	21.4	29.7	38.6	47.9	57.6	67.6	
0.500	8.2	16.4	25.7	35.7	46.3	57.4	69.1	81.2	
0.750	10.7	21.6	33.8	46.9	60.9	75.6	90.9	106.8	
1.000	13.2	26.5	41.4	57.6	74.7	92.8	111.6	131.2	
1.250	15.5	31.3	48.8	67.8	88.0	109.3	131.6	154.7	
1.500	17.8	35.8	56.0	77.8	100.9	125.3	150.8	177.4	
2.000	22.2	44.6	69.7	96.8	125.7	156.1	187.9	221.1	
2.500	26.4	53.0	82.8	115.1	149.5	185.6	223.5	263.0	
3.000	30.5	61.2	95.6	132.8	172.4	214.2	257.9	303.5	
3.500	34.4	69.1	107.9	150.0	194.8	242.0	291.4	342.9	
4.000	38.3	76.8	120.0	166.8	216.6	269.1	324.1	381.4	
5.000	45.7	91.8	143.4	199.3	258.8	321.6	387.4	456.1	
6.000	53.0	106.3	166.0	230.7	299.7	372.5	448.7	528.3	
8.000	66.8	134.1	209.4	291.1	378.2	470.1	566.5	667.2	
10.000	80.2	160.8	251.0	349.0	453.4	563.7	679.5	800.4	
12.000	93.0	186.5	291.3	404.9	526.1	654.2	788.7	929.3	

[a]Calculations from ASTM C 680; for copper: k = 2784 Btu·in/h·ft²·°F.

Solution. From Chapter 40 of the 1996 *ASHRAE Handbook—Equipment*, r_o = 3.31 in. A nominal 3-in. thick diatomaceous silica insulation to fit a nominal 6-in. steel pipe is 3.02 in. thick. A nominal 2-in. thick calcium silicate insulation to fit over the 3.02-in. diatomaceous silica is 2.08 in. thick. Therefore, r_i = 6.33 in. and r_s = 8.41 in..

Assume that the mean temperature of the diatomaceous silica is 600°F, the mean temperature of the calcium silicate is 250°F and the surface resistance R_s is 0.50. From Table 10, k_1 = 0.66; k_2 = 0.42. By Equation (10) from Chapter 22:

$$q_s = \frac{1200 - 80}{[8.41\ln(6.33/3.31)/0.66] + [8.41\ln(8.41/3.31)/0.40] + 0.50}$$

$$= \frac{1120}{(5.45/0.66) + (2.39/0.40) + 0.50} = 76.0 \text{ Btu/h} \cdot \text{ft}^2$$

From Figure 9, at 76.0 Btu/h·ft², R_s = 0.60. The mean temperature of the diatomaceous silica is:

$$5.45/0.66 = 8.26;\ 8.26/2 = 4.13$$

$$1200 - \frac{4.13}{14.83}(1120) = 888°\text{F}$$

and the mean temperature of the calcium silicate is:

$$2.39/0.40 = 5.98;\ 5.98/2 = 2.99;\ 8.26 + 2.99 = 11.25$$

$$1200 - \frac{11.25}{14.83}(1120) = 350°\text{F}$$

From Table 10, k_1 = 0.72; k_2 = 0.46. Recalculating:

$$q_s = \frac{1120}{(5.45/0.72) + (2.39/0.46) + 0.60} = 83.8 \text{ Btu/h} \cdot \text{ft}^2$$

From Figure 9 at 83.8 Btu/h·ft², R_s = 0.59. The mean temperature of the diatomaceous silica is:

$$5.45/0.72 = 7.57;\ 7.57/2 = 3.78$$

$$1200 - \frac{3.78}{13.36}(1120) = 883°\text{F}$$

and the mean temperature of the calcium silicate is:

$$2.39/0.40 = 5.98;\ 5.98/2 = 2.99;\ 8.26 + 2.99 = 11.25$$

$$1200 - \frac{11.25}{14.83}(1120) = 350°\text{F}$$

From Table 10, k_1 = 0.72; k_2 = 0.46. Recalculating:

$$2.39/0.46 = 5.20;\ 5.20/2 = 2.60;\ 7.57 + 2.60 = 10.17$$

$$1200 - \frac{10.17}{13.36}(1120) = 347°\text{F}$$

Since R_s, k_1, and k_2 do not change at 83.8 Btu/h·ft², this is q_s. The heat flow per ft² of the inner surface of the insulation is:

$$q_o = q_s(r_s/r_o) = 83.8(8.41/3.31) = 213 \text{ Btu/h} \cdot \text{ft}^2$$

Table B-2: Framed Wall Assembly U-values

Framing Type and Spacing	Framing Cavity R-Value	Insulated Sheathing R-Value	Wood Wall U-Value	Metal Wall U-Value
2x4 @ 16" O.C.	11 (compressed)	0	0.098	0.202
		4	0.068	0.112
		5	0.064	0.101
		7	0.056	0.084
		8.7	0.051	0.073
	13	0	0.088	0.195
		4	0.063	0.109
		5	0.059	0.099
		7	0.052	0.082
		8.7	0.048	0.072
	15	0	0.081	0.189
		4	0.059	0.108
		5	0.055	0.097
		7	0.049	0.077
		8.7	0.045	0.071
2x4 @ 24" O.C.	11	0	0.094	0.173
		4	0.066	0.102
		5	0.062	0.093
		7	0.055	0.078
		8.7	0.050	0.069
	13	0	0.085	0.165
		4	0.061	0.099
		5	0.057	0.090
		7	0.051	0.077
		8.7	0.047	0.068
	15	0	0.077	0.158
		4	0.056	0.097
		5	0.053	0.088
		7	0.047	0.071
		8.7	0.044	0.067

Framing Type and Spacing	Framing Cavity R-Value	Insulated Sheathing R-Value	Wood Wall U-Value	Metal Wall U-Value
2x6 @ 16" O.C.	19 (compressed)	0	0.065	0.120
		4	0.058	0.098
		5	0.048	0.089
		7	0.043	0.075
		8.7	0.040	0.067
	21	0	0.059	0.157
		4	0.046	0.096
		5	0.044	0.088
		7	0.041	0.075
		8.7	0.037	0.066
	22 (compressed)	0	0.062	0.158
		4	0.048	0.097
		5	0.045	0.088
		7	0.041	0.075
		8.7	0.038	0.067
2x6 @ 24" O.C.	19 (compressed)	0	0.062	0.135
		4	0.048	0.088
		5	0.045	0.081
		7	0.042	0.070
		8.7	0.039	0.062
	21	0	0.056	0.130
		4	0.044	0.086
		5	0.042	0.079
		7	0.039	0.068
		8.7	0.036	0.061
	22 (compressed)	0	0.058	0.132
		4	0.046	0.086
		5	0.043	0.079
		7	0.040	0.068
		8.7	0.037	0.061

Table B-2 (cont'd): Framed Wall Assembly U-values

Framing Type and Spacing	Framing Cavity R-Value	Insulated Sheathing R-Value	Wood Wall U-Value	Metal Wall U-Value
2x8 @ 16" O.C.	19	0	0.059	0.145
		4	0.047	0.092
		5	0.044	0.084
		7	0.041	0.072
		8.7	0.038	0.064
	22	0	0.054	0.140
		4	0.043	0.090
		5	0.041	0.082
		7	0.038	0.071
		8.7	0.035	0.063
	25	0	0.050	0.136
		4	0.040	0.088
		5	0.038	0.081
		7	0.035	0.070
		8.7	0.033	0.062
	30 (compressed)	0	0.048	0.135
		4	0.039	0.088
		5	0.037	0.081
		7	0.035	0.070
		8.7	0.032	0.062
2x8 @ 24" O.C.	19	0	0.056	0.122
		4	0.045	0.082
		5	0.043	0.076
		7	0.040	0.066
		8.7	0.037	0.059
	22	0	0.051	0.117
		4	0.041	0.080
		5	0.040	0.074
		7	0.036	0.064
		8.7	0.034	0.058
	25	0	0.047	0.113
		4	0.038	0.078
		5	0.037	0.072
		7	0.034	0.063
		8.7	0.032	0.057
	30 (compressed)	0	0.046	0.112
		4	0.037	0.077
		5	0.036	0.072
		7	0.034	0.063
		8.7	0.031	0.057

Framing Type and Spacing	Framing Cavity R-Value	Insulated Sheathing R-Value	Wood Wall U-Value	Metal Wall U-Value
2x10 @ 16" O.C.	30	0	0.041	0.120
		4	0.035	0.081
		5	0.033	0.075
		7	0.031	0.065
		8.7	0.029	0.059
	38 (compressed)	0	0.040	0.119
		4	0.033	0.080
		5	0.032	0.074
		7	0.030	0.065
		8.7	0.028	0.058
2x10 @ 24" O.C.	30 (compressed)	0	0.039	0.099
		4	0.033	0.071
		5	0.032	0.066
		7	0.030	0.058
		8.7	0.028	0.053
	38	0	0.038	0.097
		4	0.032	0.070
		5	0.031	0.066
		7	0.029	0.058
		8.7	0.027	0.053

Table B-2a: Solar Heat Gain Coefficients Used for Exterior Shading[1]

Exterior Shading Device	SHGC
Standard Bug Screens	0.76
Exterior Sunscreens with weave 53*16/inch	0.30
Louvered Sunscreens with louvers as wide as openings	0.27
Low Sun Angle (LSA) Louvered Sunscreens	0.13
Roll-down Awning	0.13
Roll Down Blinds or Slats	0.13
None (for skylights only)	1.00

1) Exterior operable awnings (canvas, plastic or metal), except those that roll vertically down and cover the entire window, should be treated as overhangs for purposes of compliance with the Standards.

Table B-3: Metal Framing Factor

METAL FRAMING FACTORS			
Stud Spacing	Stud Depth	Insulation R-Value	Framing Factor
16" o.c.	4"	R-7	0.522
		R-11	0.403
		R-13	0.362
		R-15	0.328
	6"	R-19	0.325
		R-21	0.300
		R-22	0.287
		R-25	0.263
24" o.c.	4"	R-7	0.577
		R-11	0.458
		R-13	0.415
		R-15	0.379
	6"	R-19	0.375
		R-21	0.348
		R-22	0.335
		R-25	0.308
R-value calculation for Exterior Wall Assemblies with Metal Studs, July, 19, 1990, Staff Draft Docket 90-CON-1.			
*Correction to metal framing factors applies to the entire assembly including: interior air films, interior surfaces, cavity/insulation, exterior surfaces, and exterior air films.			

Table B-4: Properties of Hollow Unit Masonry Walls

Type			Core Treatment		
			Solid Grout	Partly Grouted with Ungrouted Cells	
				Empty	Insulated
12"	LW CMU	U	0.51	0.43	0.30
		Rw	2.0	2.3	3.3
		HC	23	14.8	14.8
	MW CMU	U	0.54	0.46	0.33
		Rw	1.9	2.2	3.0
		HC	23.9	15.6	15.6
	NW CMU	U	0.57	0.49	0.36
		Rw	1.8	2.0	2.8
		HC	24.8	16.5	16.5
10"	LW CMU	U	0.55	0.46	0.34
		Rw	1.8	2.2	2.9
		HC	18.9	12.6	12.6
	MW CMU	U	0.59	0.49	0.37
		Rw	1.7	2.1	2.7
		HC	19.7	13.4	13.4
	NW CMU	U	0.62	0.52	0.41
		Rw	1.6	1.9	2.4
		HC	20.5	14.2	14.2
8"	LW CMU	U	0.62	0.50	0.37
		Rw	1.6	2.0	2.7
		HC	15.1	9.9	9.9
	MW CMU	U	0.65	0.53	0.41
		Rw	1.5	1.9	2.4
		HC	15.7	10.5	10.5
	NW CMU	U	0.69	0.56	0.44
		Rw	1.4	1.8	2.3
		HC	16.3	11.1	11.1
	Clay Unit	U	0.57	0.47	0.39
		Rw	1.8	2.1	2.6
		HC	15.1	11.4	11.4
6"	LW CMU	U	0.68	0.54	0.44
		Rw	1.5	1.9	2.3
		HC	10.9	7.9	7.9
	MW CMU	U	0.72	0.58	0.48
		Rw	1.4	1.7	2.1
		HC	11.4	8.4	8.4
	NW CMU	U	0.76	0.61	0.52
		Rw	1.3	1.6	1.9
		HC	11.9	8.9	8.9
	Clay Unit	U	0.65	0.52	0.45
		Rw	1.5	1.9	2.2
		HC	11.1	8.6	8.6

Notes:
LW CMU is a Light Weight Concrete Masonry Unit per ASTM C 90, Calculated at 105 PCF density
MW CMU is a Medium Weight Concrete Masonry Unit per ASTM C 90, Calculated at 115 PCF density
NW CMU is a Normal Weight Concrete Masonry Unit per ASTM C 90, Calculated at 125 PCF density
Clay Unit is a Hollow Clay Unit per ASTM C 652, Calculated at 130 PCF density
Values include air films on inner and outer surfaces.
Calculations based on Energy Calculations and Data, CMACN, 1986
Grouted Cells at 32" X 48" in Partly Grouted Walls
Source: Berkeley Solar Group; Concrete Masonry Association of California and Nevada

Table B-5: Properties of Solid Unit Masonry and Solid Concrete Walls

Type		Layer Thickness, inches									
		3	4	5	6	7	8	9	10	11	12
LW CMU	U	na	0.71	0.64	na	na	na	na	na	na	na
	Rw	na	1.4	1.6	na	na	na	na	na	na	na
	HC	na	7.00	8.75	na	na	na	na	na	na	na
MW CMU	U	na	0.76	0.70	na	na	na	na	na	na	na
	Rw	na	1.3	1.4	na	na	na	na	na	na	na
	HC	na	7.67	9.58	na	na	na	na	na	na	na
NW CMU	U	0.89	0.82	0.76	na	na	na	na	na	na	na
	Rw	1.1	1.2	1.3	na	na	na	na	na	na	na
	HC	6.25	8.33	10.42	na	na	na	na	na	na	na
Clay Brick	U	0.80	0.72	0.66	na	na	na	na	na	na	na
	Rw	1.3	1.4	1.5	na	na	na	na	na	na	na
	HC	6.30	8.40	10.43	na	na	na	na	na	na	na
Concrete	U	0.96	0.91	0.86	0.82	0.78	0.74	0.71	0.68	0.65	0.63
	Rw	1.0	1.1	1.2	1.2	1.3	1.4	1.4	1.5	1.5	1.6
	HC	7.20	9.60	12.00	14.40	16.80	19.20	21.60	24.00	26.40	28.80

Notes:
LW CMU is a Light Weight Concrete Masonry Unit per ASTM C 90 or 55, Calculated at 105 PCF density
MW CMU is a Medium Weight Concrete Masonry Unit per ASTM C 90 or 55, Calculated at 115 PCF density
NW CMU is a Normal Weight Concrete Masonry Unit per ASTM C 90 or 55, Calculated at 125 PCF density
Clay Brick is a Clay Unit per ASTM C 62, Calculated at 130 PCF density
Concrete is structural poured or precast concrete, Calculated at 144 PCF density
Calculations based on Energy Calculations and Data, CMACN, 1986
Values include air films on inner and outer surfaces.
Source: Berkeley Solar Group; Concrete Masonry Association of California and Nevada

Table B-6: Effective R-values for Interior Insulation Layers on Structural Mass Walls

Type Actual Thick	Frame	FURRING SPACE R-VALUE WITHOUT FRAMING EFFECTS																					
		0	1	2	3	4	5	6	7	8	9	10	11	12	13	14	15	16	17	18	19	20	21
Any	None	0.5	1.5	2.5	3.5	4.5	5.5	6.5	7.5	8.5	9.5	10	11.5	12.5	13.5	14.5	15.5	16.5	17.5	18.5	19.5	20.5	21.5
0.5"	Wood	1.3	1.3	1.9	2.4	2.7	na	na	na	na	na	na	na	na	na	na	na	na	na	na	na	na	na
	Metal	0.9	0.9	1.1	1.1	1.2	na	na	na	na	na	na	na	na	na	na	na	na	na	na	na	na	na
0.75"	Wood	1.4	1.4	2.1	2.7	3.1	3.5	3.8	na	na	na	na	na	na	na	na	na	na	na	na	na	na	na
	Metal	1.0	1.0	1.3	1.4	1.5	1.5	1.6	na	na	na	na	na	na	na	na	na	na	na	na	na	na	na
1.0"	Wood	1.3	1.5	2.2	2.9	3.4	3.9	4.3	4.6	4.9	na	na	na	na	na	na	na	na	na	na	na	na	na
	Metal	1.0	1.1	1.4	1.6	1.7	1.8	1.8	1.9	1.9	na	na	na	na	na	na	na	na	na	na	na	na	na
1.5"	Wood	1.3	1.5	2.4	3.1	3.8	4.4	4.9	5.4	5.8	6.2	6.5	6.8	7.1	na	na	na	na	na	na	na	na	na
	Metal	1.1	1.2	1.6	1.9	2.1	2.2	2.3	2.4	2.5	2.5	2.6	2.6	2.7	na	na	na	na	na	na	na	na	na
2"	Wood	1.4	1.5	2.5	3.3	4.0	4.7	5.3	5.9	6.4	6.9	7.3	7.7	8.1	8.4	8.7	9.0	9.3	na	na	na	na	na
	Metal	1.1	1.2	1.7	2.1	2.3	2.5	2.7	2.8	2.9	3.0	3.1	3.2	3.2	3.3	3.3	3.4	3.4	na	na	na	na	na
2.5"	Wood	1.4	1.5	2.5	3.4	4.2	4.9	5.6	6.3	6.8	7.4	7.9	8.4	8.8	9.2	9.6	10.0	10.3	10.6	10.9	11.2	11.5	na
	Metal	1.2	1.3	1.8	2.3	2.6	2.8	3.0	3.2	3.3	3.5	3.6	3.6	3.7	3.8	3.9	3.9	4.0	4.0	4.1	4.1	4.1	na
3"	Wood	1.4	1.5	2.5	3.5	4.3	5.1	5.8	6.5	7.2	7.8	8.3	8.9	9.4	9.9	10.3	10.7	11.1	11.5	11.9	12.2	12.5	12.9
	Metal	1.2	1.3	1.9	2.4	2.8	3.1	3.3	3.5	3.7	3.8	4.0	4.1	4.2	4.3	4.4	4.4	4.5	4.6	4.6	4.7	4.7	4.8
3.5"	Wood	1.4	1.5	2.6	3.5	4.4	5.2	6.0	6.7	7.4	8.1	8.7	9.3	9.8	10.4	10.9	11.3	11.8	12.2	12.6	13.0	13.4	13.8
	Metal	1.2	1.3	2.0	2.5	2.9	3.2	3.5	3.8	4.0	4.2	4.3	4.5	4.6	4.7	4.8	4.9	5.0	5.1	5.1	5.2	5.2	5.3
4"	Wood	1.4	1.6	2.6	3.6	4.5	5.3	6.1	6.9	7.6	8.3	9.0	9.6	10.2	10.8	11.3	11.9	12.4	12.8	13.3	13.7	14.2	14.6
	Metal	1.2	1.3	2.0	2.6	3.0	3.4	3.7	4.0	4.2	4.5	4.6	4.8	5.0	5.1	5.2	5.3	5.4	5.5	5.6	5.7	5.8	5.8
4.5"	Wood	1.4	1.6	2.6	3.6	4.5	5.4	6.2	7.1	7.8	8.5	9.2	9.9	10.5	11.2	11.7	12.3	12.8	13.3	13.8	14.3	14.8	15.2
	Metal	1.2	1.3	2.1	2.6	3.1	3.5	3.9	4.2	4.5	4.7	4.9	5.1	5.3	5.4	5.6	5.7	5.8	5.9	6.0	6.1	6.2	6.3
5"	Wood	1.4	1.6	2.6	3.6	4.6	5.5	6.3	7.2	8	8.7	9.4	10.1	10.8	11.5	12.1	12.7	13.2	13.8	14.3	14.8	15.3	15.8
	Metal	1.2	1.4	2.1	2.7	3.2	3.7	4.1	4.4	4.7	5.0	5.2	5.4	5.6	5.8	5.9	6.1	6.2	6.3	6.5	6.6	6.7	6.8
5.5"	Wood	1.4	1.6	2.6	3.6	4.6	5.5	6.4	7.3	8.1	8.9	9.6	10.3	11.0	11.7	12.4	13.0	13.6	14.2	14.7	15.3	15.8	16.3
	Metal	1.3	1.4	2.1	2.8	3.3	3.8	4.2	4.6	4.9	5.2	5.4	5.7	5.9	6.1	6.3	6.4	6.6	6.7	6.8	7.0	7.1	7.2

All furring thickness values given are actual dimensions

All values include .5" gypboard on the inner surface, interior surface resistances not included

- 24" OC Furring
- 24 Gage, Z-type Metal Furring
- Douglas-Fir Larch Wood Furring, density = 34.9 lb/cu.ft
- Insulation assumed to fill the furring space

[Source: Berkeley Solar Group; Concrete Masonry Association of California and Nevada]

Table B-7: Framed Wall/Floor/Ceiling Assembly U-Values

Reference Name: W.0.2x4.16

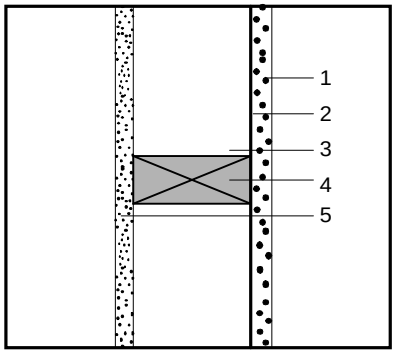

Sketch of Construction Assembly

Assembly Type: (check one)
- Floor
- ✓ Wall
- Ceiling/Roof

Framing Material: Wood

Framing Size: 2 × 4

Framing Spacing: 16 "o.c.

Framing Percentage: (check one)

Wall:	✓	15% (16"o.c.)
		12% (24"o.c.)
		9% (48"o.c.)
Floor/Ceiling		10% (16"o.c.)
		7% (24"o.c.)
		4% (48"o.c.)

Wall Weight / sf: (Packages only) NA

List of Construction Components		R-Value: Cavity (R_c)	R-Value: Frame (R_f)
	Outside Surface Air Film	0.170	0.170
1.	0.875 in stucco	0.180	0.180
2.	Building paper (felt)	0.060	0.060
3.	3.5" & greater air space; heat sideways	0.850	-----
4.	2x4 in fir framing	-----	3.465
5.	0.50 in gypsum or plaster board	0.450	0.450
6.			
7.			
	Inside Surface Air Film	0.680	0.680
	Total Unadjusted R-Values:	2.390	5.005
		R_c	R_f

Framing Adjustment Calculation:

$$[(\frac{1/2.390}{1 \div R_c}) \times (\frac{1-15/100}{1-(Fr.\% \div 100)})] + [(\frac{1/5.005}{1 \div R_f}) \times (\frac{15/100}{Fr.\% \div 100})] = \boxed{0.385}$$

Total U-Value

$$\frac{1/0.385}{1 \div \text{Total U-Value}} = \frac{2.593}{\text{Total R-Value}}$$

Reference Name: W.0.S2x4.16

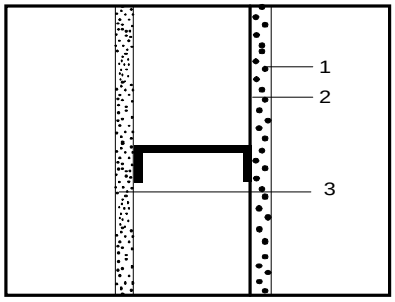

Sketch of Construction Assembly

Assembly Type: (check one)
- Floor
- ✓ Wall
- Ceiling/Roof

Framing Material: Metal

Framing Spacing: 16 "o.c.

Framing Size:
- Actual Depth: 3.625
- Actual Width: 1.625

Cavity Insulation:
- R-value: 0.850
- Knock-out (%): 15.00
- Web Thickness: 0.060

Insulation Tape R-value:
- Interior Flange: 0.0
- Exterior Flange: 0.0

List of Construction Components		R-Value
	Outside Surface Air Film	0.170
1.	0.875 in stucco	0.180
2.	Building paper (felt)	0.060
3.	0.50 in gypsum or plaster board	0.450
4.		
5.		
6.		
7.		
	Inside Surface Air Film	0.680

Calculation:

From EZFRAME = **0.449**

Total U-Value

$$\frac{1/0.449}{1 \div \text{Total U-Value}} = \frac{2.23}{\text{Total R-Value}}$$

Reference Name: W.0.2x4.24

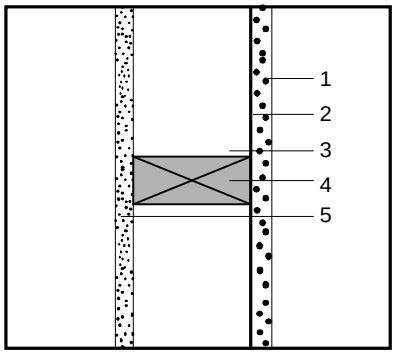

Sketch of Construction Assembly

Assembly Type: (check one)
- Floor
- ✓ Wall
- Ceiling/Roof

Framing Material: Wood

Framing Size: 2 × 4

Framing Spacing: 24 "o.c.

Framing Percentage: (check one)

Wall:		15% (16"o.c.)
	✓	12% (24"o.c.)
		9% (48"o.c.)
Floor/Ceiling		10% (16"o.c.)
		7% (24"o.c.)
		4% (48"o.c.)

Wall Weight / sf: (Packages only) NA

List of Construction Components		R-Value: Cavity (R_c)	R-Value: Frame (R_f)
	Outside Surface Air Film	0.170	0.170
1.	0.875 in stucco	0.180	0.180
2.	Building paper (felt)	0.060	0.060
3.	3.5" & greater air space; heat sideways	0.850	-----
4.	2x4 in fir framing	-----	3.465
5.	0.50 in gypsum or plaster board	0.450	0.450
6.			
7.			
	Inside Surface Air Film	0.680	0.680
	Total Unadjusted R-Values:	2.390	5.005
		R_c	R_f

Framing Adjustment Calculation:

$$[(\underset{1\div R_c}{\underline{1/2.390}}) \times (\underset{1-(Fr.\%\div 100)}{\underline{1-12/100}})] + [(\underset{1\div R_f}{\underline{1/5.005}}) \times (\underset{Fr.\%\div 100}{\underline{12/100}})] = \boxed{0.392}$$

Total U-Value

$$\underset{1\div \text{Total U-Value}}{\underline{1/0.392}} = \underset{\textbf{Total R-Value}}{\underline{2.549}}$$

Reference Name: W.0.S2x4.24

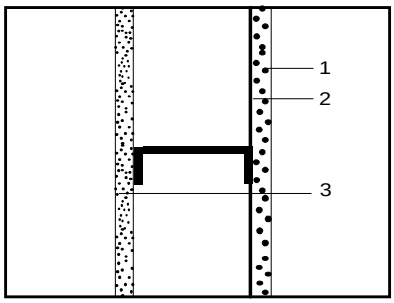

Sketch of Construction Assembly

Assembly Type: (check one)
- Floor
- ✓ Wall
- Ceiling/Roof

Framing Material: Metal

Framing Spacing: 24 "o.c.

Framing Size:
- Actual Depth: 3.625
- Actual Width: 1.625

Cavity Insulation:
- R-value: 0.850
- Knock-out (%): 15.00
- Web Thickness: 0.060

Insulation Tape R-value:
- Interior Flange: 0.0
- Exterior Flange: 0.0

List of Construction Components		R-Value
	Outside Surface Air Film	0.170
1.	0.875 in stucco	0.180
2.	Building paper (felt)	0.060
3.	0.50 in gypsum or plaster board	0.450
4.		
5.		
6.		
7.		
	Inside Surface Air Film	0.680

Calculation:

From EZFRAME = **0.443**

Total U-Value

$$\underset{1\div \text{Total U-Value}}{\underline{1/0.443}} = \underset{\textbf{Total R-Value}}{\underline{2.260}}$$

Reference Name: W.7.2x4.16

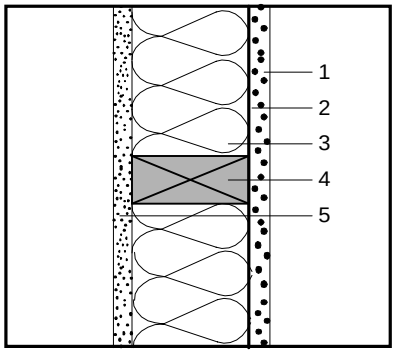

Sketch of Construction Assembly

Assembly Type: (check one)
- Floor
- ✓ Wall
- Ceiling/Roof

Framing Material: Wood

Framing Size: 2 × 4

Framing Spacing: 16 "o.c.

Framing Percentage: (check one)
- Wall: ✓ 15% (16"o.c.)
- 12% (24"o.c.)
- 9% (48"o.c.)
- Floor/Ceiling 10% (16"o.c.)
- 7% (24"o.c.)
- 4% (48"o.c.)

Wall Weight / sf: NA (Packages only)

List of Construction Components		R-Value: Cavity (R_c)	R-Value: Frame (R_f)
	Outside Surface Air Film	0.170	0.170
1.	0.875 in stucco	0.180	0.180
2.	Building paper (felt)	0.060	0.060
3.	R-7 fiberglass insulation	7.000	-----
4.	2x4 in fir framing	-----	3.465
5.	0.50 in gypsum or plaster board	0.450	0.450
6.			
7.			
	Inside Surface Air Film	0.680	0.680
	Total Unadjusted R-Values:	8.540	5.005
		R_c	R_f

Framing Adjustment Calculation:

$$\left[\left(\frac{1/8.540}{1 \div R_c}\right) \times \left(\frac{1-15/100}{1-(Fr.\% \div 100)}\right)\right] + \left[\left(\frac{1/5.005}{1 \div R_f}\right) \times \left(\frac{15/100}{Fr.\% \div 100}\right)\right] = \boxed{0.130}$$

Total U-Value

$$\frac{1/0.130}{1 \div \text{Total U-Value}} = 7.69$$

Total R-Value

Reference Name: W.7.S2x4.16

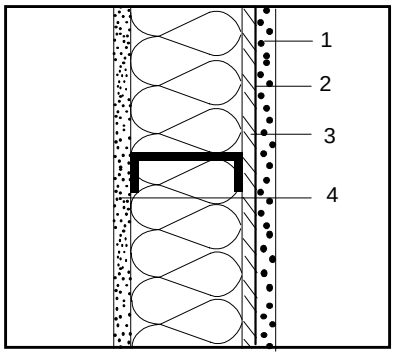

Sketch of Construction Assembly

Assembly Type: (check one)
- Floor
- ✓ Wall
- Ceiling/Roof

Framing Material: Metal

Framing Spacing: 16 "o.c.

Framing Size:
- Actual Depth 3.625
- Actual Width 1.625

Cavity Insulation:
- R-value 7.00
- Knock-out (%) 15.00
- Web Thickness 0.060

Insulation Tape R-value:
- Interior Flange 0.0
- Exterior Flange 0.0

List of Construction Components		R-Value
	Outside Surface Air Film	0.170
1.	0.875 in stucco	0.180
2.	Building paper (felt)	0.060
3.	0.50 in polyisocyanurate	3.520
4.	0.50 in gypsum or plaster board	0.450
5.		
6.		
7.		
	Inside Surface Air Film	0.680

Calculation:

From EZFRAME = $\boxed{0.125}$

Total U-Value

$$\frac{1/0.125}{1 \div \text{Total U-Value}} = 7.990$$

Total R-Value

Reference Name: W.7.2x4.24

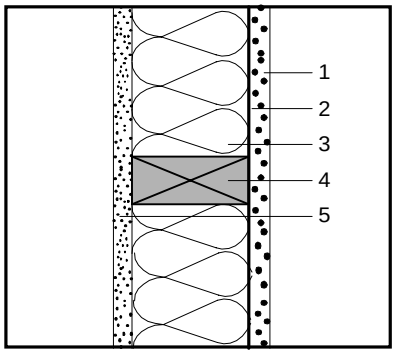

Sketch of Construction Assembly

Assembly Type: (check one)
- Floor
- ✓ Wall
- Ceiling/Roof

Framing Material: Wood

Framing Size: 2 × 4

Framing Spacing: 24 "o.c.

Framing Percentage: (check one)

Wall:
- 15% (16"o.c.)
- ✓ 12% (24"o.c.)
- 9% (48"o.c.)

Floor/Ceiling
- 10% (16"o.c.)
- 7% (24"o.c.)
- 4% (48"o.c.)

Wall Weight / sf: (Packages only) NA

List of Construction Components		R-Value: Cavity (R_c)	R-Value: Frame (R_f)
	Outside Surface Air Film	0.170	0.170
1.	0.875 in stucco	0.180	0.180
2.	Building paper (felt)	0.060	0.060
3.	R-7 Fiberglass Insulation	7.000	-----
4.	2x4 in fir framing	-----	3.465
5.	0.50 in gypsum or plaster board	0.450	0.450
6.			
7.			
	Inside Surface Air Film	0.680	0.680
	Total Unadjusted R-Values:	8.540	5.005
		R_c	R_f

Framing Adjustment Calculation:

$$[(\frac{1}{8.540}) \times (\frac{1-12/100}{1-(Fr.\% \div 100)})] + [(\frac{1}{5.005}) \times (\frac{12}{100})] = \boxed{0.127}$$

$1 \div R_c$ $1 \div R_f$ Fr.% ÷100

Total U-Value

$$\frac{1/0.127}{1 \div \text{Total U-Value}} = 7.874$$

Total R-Value

Reference Name: W.7.S2x4.24

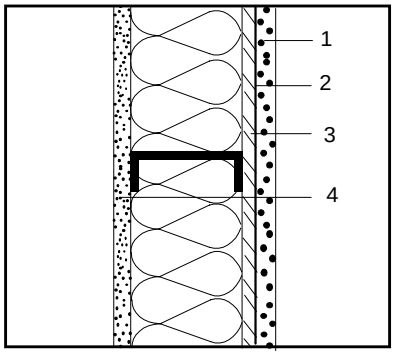

Sketch of Construction Assembly

Assembly Type: (check one)
- Floor
- ✓ Wall
- Ceiling/Roof

Framing Material: Metal

Framing Spacing: 24 "o.c.

Framing Size:
- Actual Depth 3.625
- Actual Width 1.625

Cavity Insulation:
- R-value 7.000
- Knock-out (%) 15.000
- Web Thickness 0.060

Insulation Tape R-value:
- Interior Flange 0.0
- Exterior Flange 0.0

List of Construction Components		R-Value
	Outside Surface Air Film	0.170
1.	0.875 in stucco	0.180
2.	Building paper (felt)	0.060
3.	0.50 in polyisocyanurate	3.520
4.	0.50 in gypsum or plaster board	0.450
5.		
6.		
7.		
	Inside Surface Air Film	0.680

Calculation:

From EZFRAME = **0.117**

Total U-Value

$$\frac{1/0.117}{1 \div \text{Total U-Value}} = 8.530$$

Total R-Value

Reference Name: W.11.2x4.16

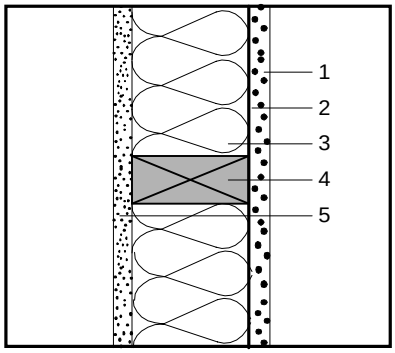

Sketch of Construction Assembly

Assembly Type: (check one)
- Floor
- ✓ Wall
- Ceiling/Roof

Framing Material: Wood

Framing Size: 2 × 4

Framing Spacing: 16 "o.c.

Framing Percentage: (check one)
- Wall: ✓ 15% (16"o.c.)
- 12% (24"o.c.)
- 9% (48"o.c.)
- Floor/Ceiling 10% (16"o.c.)
- 7% (24"o.c.)
- 4% (48"o.c.)

Wall Weight / sf: NA (Packages only)

List of Construction Components		R-Value: Cavity (R_c)	R-Value: Frame (R_f)
	Outside Surface Air Film	0.170	0.170
1.	0.875 in stucco	0.180	0.180
2.	Building paper (felt)	0.060	0.060
3.	R-11 fiberglass insulation	11.000	-----
4.	2x4 in fir framing	-----	3.465
5.	0.50 in gypsum or plaster board	0.450	0.450
6.			
7.			
	Inside Surface Air Film	0.680	0.680
	Total Unadjusted R-Values:	12.540	5.005
		R_c	R_f

Framing Adjustment Calculation:

$$\left[\left(\frac{1/12.540}{1 \div R_c}\right) \times \left(\frac{1-15/100}{1-(Fr.\% \div 100)}\right)\right] + \left[\left(\frac{1/5.005}{1 \div R_f}\right) \times \left(\frac{15/100}{Fr.\% \div 100}\right)\right] = \boxed{0.098}$$

Total U-Value

$$\frac{1/0.098}{1 \div \text{Total U-Value}} = \frac{10.204}{\text{Total R-Value}}$$

Reference Name: W.11.S2x4.16

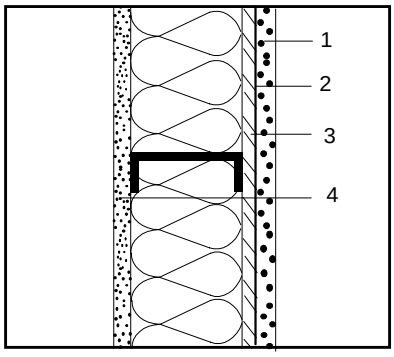

Sketch of Construction Assembly

Assembly Type: (check one)
- Floor
- ✓ Wall
- Ceiling/Roof

Framing Material: Metal

Framing Spacing: 16 "o.c.

Framing Size:
- Actual Depth 3.625
- Actual Width 1.625

Cavity Insulation:
- R-value 11.000
- Knock-out (%) 15.000
- Web Thickness 0.060

Insulation Tape R-value:
- Interior Flange 0.0
- Exterior Flange 0.0

List of Construction Components		R-Value
	Outside Surface Air Film	0.170
1.	0.875 in stucco	0.180
2.	Building paper (felt)	0.060
3.	0.75 in polyisocyanurate	5.280
4.	0.50 in gypsum or plaster board	0.450
5.		
6.		
7.		
	Inside Surface Air Film	0.680

Calculation:

From EZFRAME = $\boxed{0.096}$

Total U-Value

$$\frac{1/0.096}{1 \div \text{Total U-Value}} = \frac{10.360}{\text{Total R-Value}}$$

Reference Name: W.11.2x4.24

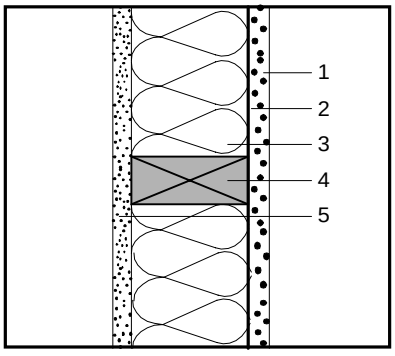

Sketch of Construction Assembly

Assembly Type: (check one)
- Floor
- ✓ Wall
- Ceiling/Roof

Framing Material: Wood

Framing Size: 2 × 4

Framing Spacing: 24 "o.c.

Framing Percentage: (check one)

Wall:
- 15% (16"o.c.)
- ✓ 12% (24"o.c.)
- 9% (48"o.c.)

Floor/Ceiling
- 10% (16"o.c.)
- 7% (24"o.c.)
- 4% (48"o.c.)

Wall Weight / sf: (Packages only) NA

List of Construction Components		R-Value: Cavity (R_c)	R-Value: Frame (R_f)
	Outside Surface Air Film	0.170	0.170
1.	0.875 in stucco	0.180	0.180
2.	Building paper (felt)	0.060	0.060
3.	R-11 fiberglass insulation	11.000	-----
4.	2x4 in fir framing	-----	3.465
5.	0.50 in gypsum or plaster board	0.450	0.450
6.			
7.			
	Inside Surface Air Film	0.680	0.680
	Total Unadjusted R-Values:	12.540	5.005
		R_c	R_f

Framing Adjustment Calculation:

[(1/12.540) × (1-12/100)] + [(1/5.005) × (12/100)] = **0.094**

$1 \div R_c$ — 1-(Fr.% ÷100) — $1 \div R_f$ — Fr.% ÷100

Total U-Value

1/0.094 (1÷Total U-Value) = 10.638 **Total R-Value**

Reference Name: W.11.S2x4.24

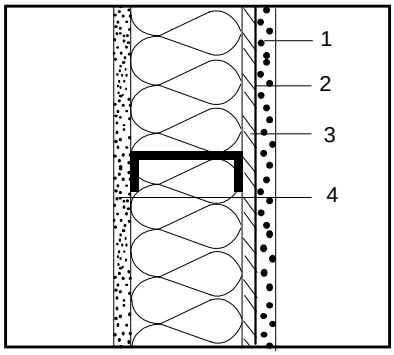

Sketch of Construction Assembly

Assembly Type: (check one)
- Floor
- ✓ Wall
- Ceiling/Roof

Framing Material: Metal

Framing Spacing: 24 "o.c.

Framing Size:
- Actual Depth: 3.625
- Actual Width: 1.625

Cavity Insulation:
- R-value: 11.000
- Knock-out (%): 15.000
- Web Thickness: 0.060

Insulation Tape R-value:
- Interior Flange: 0.0
- Exterior Flange: 0.0

List of Construction Components		R-Value
	Outside Surface Air Film	0.170
1.	0.875 in stucco	0.180
2.	Building paper (felt)	0.060
3.	0.75 in polyisocyanurate	5.280
4.	0.50 in gypsum or plaster board	0.450
5.		
6.		
7.		
	Inside Surface Air Film	0.680

Calculation:

From EZFRAME = **0.090**

Total U-Value

1/0.090 (1÷Total U-Value) = 11.140 **Total R-Value**

Reference Name: W.13.2x4.16

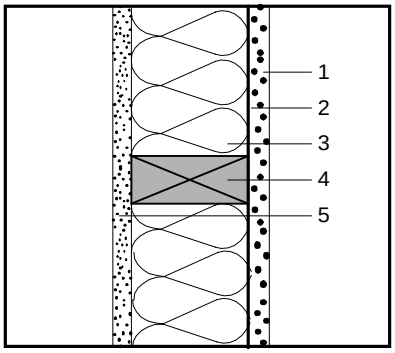

Sketch of Construction Assembly

Assembly Type: (check one)
- Floor
- ✓ Wall
- Ceiling/Roof

Framing Material: Wood

Framing Size: 2 × 4

Framing Spacing: 16 "o.c.

Framing Percentage: (check one)

Wall:
- ✓ 15% (16"o.c.)
- 12% (24"o.c.)
- 9% (48"o.c.)

Floor/Ceiling
- 10% (16"o.c.)
- 7% (24"o.c.)
- 4% (48"o.c.)

Wall Weight / sf: NA (Packages only)

List of Construction Components		R-Value: Cavity (R_c)	R-Value: Frame (R_f)
	Outside Surface Air Film	0.170	0.170
1.	0.875 in stucco	0.180	0.180
2.	Building paper (felt)	0.060	0.060
3.	R-13 fiberglass insulation	13.000	-----
4.	2x4 in fir framing	-----	3.465
5.	0.50 in gypsum or plaster board	0.450	0.450
6.			
7.			
	Inside Surface Air Film	0.680	0.680
	Total Unadjusted R-Values:	14.540	5.005
		R_c	R_f

Framing Adjustment Calculation:

$$[(\underset{1\div R_c}{1/14.540}) \times (\underset{1-(Fr.\%\div 100)}{1-15/100})] + [(\underset{1\div R_f}{1/5.005}) \times (\underset{Fr.\%\div 100}{15/100})] = \boxed{0.088}$$

Total U-Value

$$\frac{1/0.088}{1\div \text{Total U-Value}} = 11.364$$

Total R-Value

Reference Name: W.13.S2x4.16

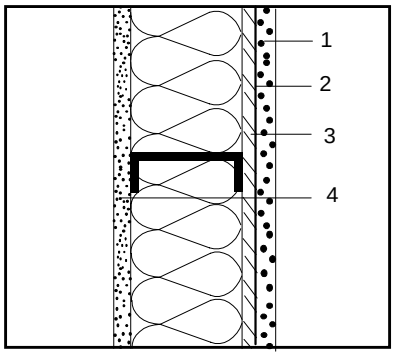

Sketch of Construction Assembly

Assembly Type: (check one)
- Floor
- ✓ Wall
- Ceiling/Roof

Framing Material: Metal

Framing Spacing: 16 "o.c.

Framing Size:
- Actual Depth: 3.625
- Actual Width: 1.625

Cavity Insulation:
- R-value: 13.000
- Knock-out (%): 15.000
- Web Thickness: 0.060

Insulation Tape R-value:
- Interior Flange: 0.0
- Exterior Flange: 0.0

List of Construction Components		R-Value
	Outside Surface Air Film	0.170
1.	0.875 in stucco	0.180
2.	Building paper (felt)	0.060
3.	1.00 in Polyisocyanurate	7.040
4.	0.50 in gypsum or plaster board	0.450
5.		
6.		
7.		
	Inside Surface Air Film	0.680

Calculation:

From EZFRAME = **0.081**

Total U-Value

$$\frac{1/0.081}{1\div \text{Total U-Value}} = 12.330$$

Total R-Value

Reference Name: W.13.2x4.24

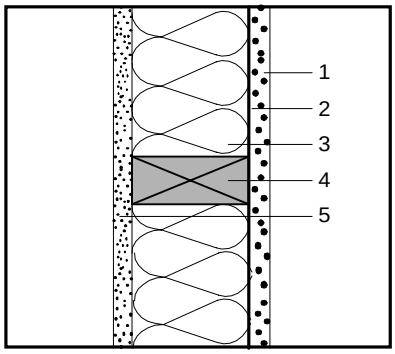

Sketch of Construction Assembly

Assembly Type: (check one)
- ___ Floor
- ✓ Wall
- ___ Ceiling/Roof

Framing Material: Wood

Framing Size: 2 × 4

Framing Spacing: 24 "o.c.

Framing Percentage: (check one)

Wall:
- ___ 15% (16"o.c.)
- ✓ 12% (24"o.c.)
- ___ 9% (48"o.c.)

Floor/Ceiling
- ___ 10% (16"o.c.)
- ___ 7% (24"o.c.)
- ___ 4% (48"o.c.)

Wall Weight / sf: NA (Packages only)

List of Construction Components		**R-Value** Cavity (R_c)	Frame (R_f)
	Outside Surface Air Film	0.170	0.170
1.	0.875 in stucco	0.180	0.180
2.	Building paper (felt)	0.060	0.060
3.	R-13 fiberglass insulation	13.000	-----
4.	2x4 in fir framing	-----	3.465
5.	0.50 in gypsum or plaster board	0.450	0.450
6.			
7.			
	Inside Surface Air Film	0.680	0.680
	Total Unadjusted R-Values:	14.540	5.005
		R_c	R_f

Framing Adjustment Calculation:

[(1/14.540) × (1-12/100)] + [(1/5.005) × (12/100)] = **0.084**

($1 \div R_c$; 1-(Fr.% ÷100); $1 \div R_f$; Fr.% ÷100)

Total U-Value

1/0.084 (1÷Total U-Value) = 11.905 **Total R-Value**

Reference Name: W.13.S2x4.24

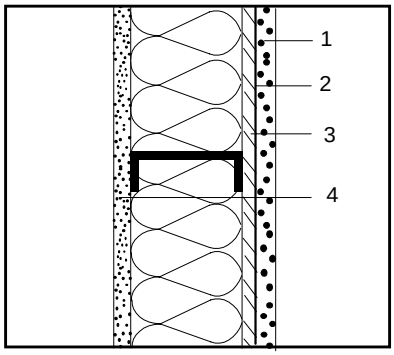

Sketch of Construction Assembly

Assembly Type: (check one)
- ___ Floor
- ✓ Wall
- ___ Ceiling/Roof

Framing Material: Metal

Framing Spacing: 24 "o.c.

Framing Size:
- Actual Depth: 3.625
- Actual Width: 1.625

Cavity Insulation:
- R-value: 13.00
- Knock-out (%): 15.00
- Web Thickness: 0.060

Insulation Tape R-value:
- Interior Flange: 0.0
- Exterior Flange: 0.0

List of Construction Components		**R-Value**
	Outside Surface Air Film	0.170
1.	0.875 in stucco	0.180
2.	Building paper (felt)	0.060
3.	0.75 in polyisocyanurate	5.280
4.	0.50 in gypsum or plaster board	0.450
5.		
6.		
7.		
	Inside Surface Air Film	0.680

Calculation:

From EZFRAME = **0.087** **Total U-Value**

1/0.087 (1÷Total U-Value) = 11.460 **Total R-Value**

Reference Name: WP.14.2x4.48

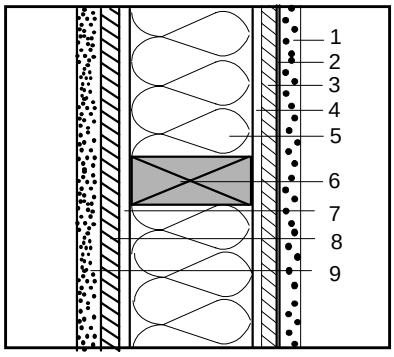

Sketch of Construction Assembly

Assembly Type: (check one)
- Floor
- ✓ Wall
- Ceiling/Roof

Framing Material: Wood

Framing Size: 2 × 4

Framing Spacing: 48 "o.c.

Framing Percentage: (check one)

Wall:
- 15% (16"o.c.)
- 12% (24"o.c.)
- ✓ 9% (48"o.c.)

Floor/Ceiling
- 10% (16"o.c.)
- 7% (24"o.c.)
- 4% (48"o.c.)

Wall Weight / sf: NA (Packages only)

List of Construction Components		**R-Value** Cavity (R_c)	**R-Value** Frame (R_f)
	Outside Surface Air Film	0.170	0.170
1.	0.875 in stucco	0.180	0.180
2.	Building paper (felt)	0.060	0.060
3.	0.375 in plywood	0.470	0.470
4.	0.875 in Furring Channel	0.800	0.800
5.	3 5/8 in EPS foam insulation @ R-3.85/in	13.956	-----
6.	2x4 in fir framing	-----	3.465
7.	0.875 in Furring Channel	0.800	0.800
8.	0.375 in plywood	0.470	0.470
9.	0.50 in gypsum or plaster board	0.450	0.450
	Inside Surface Air Film	0.680	0.680
	Total Unadjusted R-Values:	18.036 (R_c)	7.545 (R_f)

Framing Adjustment Calculation:

[(1/18.036) × (1-9/100)] + [(1/7.545) × (9/100)] =

($1 \div R_c$; 1-(Fr.% ÷100); $1 \div R_f$; Fr.% ÷100)

0.062

Total U-Value

1/0.062 (1÷Total U-Value) = 16.129 **Total R-Value**

Reference Name: WP.14.S2x4.48

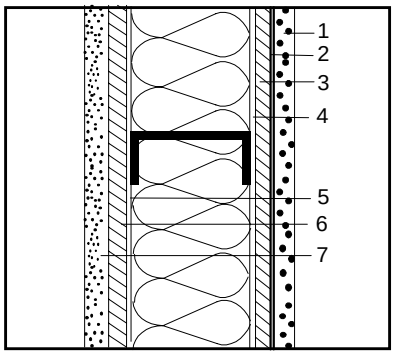

Sketch of Construction Assembly

Assembly Type: (check one)
- Floor
- ✓ Wall
- Ceiling/Roof

Framing Material: Metal

Framing Spacing: 48 "o.c.

Framing Size:
- Actual Depth: 3.625
- Actual Width: 1.625

Cavity Insulation:
- R-value: 14.00
- Knock-out (%): 15.00
- Web Thickness: 0.060

Insulation Tape R-value:
- Interior Flange: 0.0
- Exterior Flange: 0.0

List of Construction Components		**R-Value**
	Outside Surface Air Film	0.170
1.	0.875 in stucco	0.180
2.	Building paper (felt)	0.060
3.	1.00 in polyisocyanurate	7.040
4.	0.875 in Furring Channel	0.800
5.	0.875 in Furring Channel	0.800
6.	0.375 in plywood	0.470
7.	0.50 in gypsum or plaster board	0.450
	Inside Surface Air Film	0.680

Calculation:

From EZFRAME = **0.062**

Total U-Value

1/0.062 (1÷Total U-Value) = 16.26 **Total R-Value**

Reference Name: W.15.2x4.16

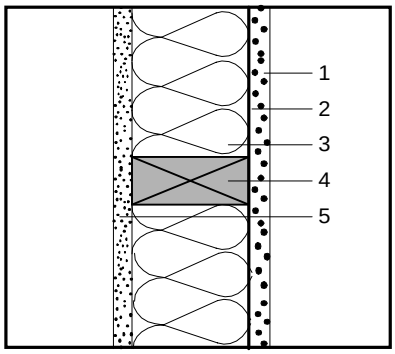

Sketch of Construction Assembly

Assembly Type: (check one)
- Floor
- ✓ Wall
- Ceiling/Roof

Framing Material: Wood

Framing Size: 2 × 4

Framing Spacing: 16 "o.c.

Framing Percentage: (check one)

Wall:	✓	15% (16"o.c.)
		12% (24"o.c.)
		9% (48"o.c.)
Floor/Ceiling		10% (16"o.c.)
		7% (24"o.c.)
		4% (48"o.c.)

Wall Weight / sf: NA (Packages only)

List of Construction Components		R-Value: Cavity (R_c)	R-Value: Frame (R_f)
	Outside Surface Air Film	0.170	0.170
1.	0.875 in stucco	0.180	0.180
2.	Building paper (felt)	0.060	0.060
3.	R-15 fiberglass insulation	15.000	-----
4.	2x4 in fir framing	-----	3.465
5.	0.50 in gypsum or plaster board	0.450	0.450
6.			
7.			
	Inside Surface Air Film	0.680	0.680
	Total Unadjusted R-Values:	16.540	5.005
		R_c	R_f

Framing Adjustment Calculation:

$$[(\frac{1}{16.540}) \times (\frac{1-15}{100})] + [(\frac{1}{5.005}) \times (\frac{15}{100})] = 0.081$$

($1 \div R_c$; 1-(Fr.% ÷100); $1 \div R_f$; Fr.% ÷100)

Total U-Value

$$\frac{1}{0.081} = 12.346$$

(1÷Total U-Value) **Total R-Value**

Reference Name: W.15.S2x4.16

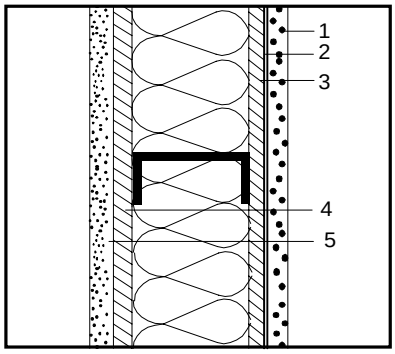

Sketch of Construction Assembly

Assembly Type: (check one)
- Floor
- ✓ Wall
- Ceiling/Roof

Framing Material: Metal

Framing Spacing: 16 "o.c.

Framing Size:
- Actual Depth: 3.625
- Actual Width: 1.625

Cavity Insulation:
- R-value: 15.00
- Knock-out (%): 15.00
- Web Thickness: 0.060

Insulation Tape R-value:
- Interior Flange:
- Exterior Flange:

List of Construction Components		R-Value
	Outside Surface Air Film	0.170
1.	0.875 in stucco	0.180
2.	Building paper (felt)	0.060
3.	0.50 in Polyisocyanurate	3.520
4.	0.50 in Polyisocyanurate	3.520
5.	0.50 in gypsum or plaster board	0.450
6.		
7.		
	Inside Surface Air Film	0.680

Calculation:

From EZFRAME = **0.080**

Total U-Value

$$\frac{1}{0.080} = 12.510$$

(1÷Total U-Value) **Total R-Value**

Reference Name: W.15.2x4.24

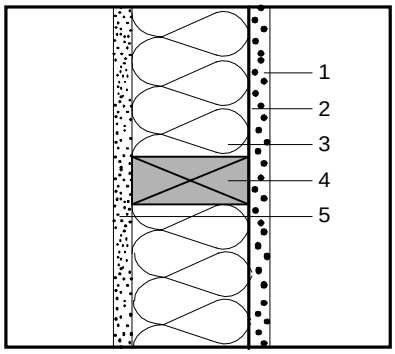

Sketch of Construction Assembly

Assembly Type: (check one)		Floor	
	✓	Wall	
		Ceiling/Roof	
Framing Material:	Wood		
Framing Size:	2 × 4		
Framing Spacing:	24	"o.c.	
Framing Percentage: (check one)	Wall:		15% (16"o.c.)
		✓	12% (24"o.c.)
			9% (48"o.c.)
	Floor/Ceiling		10% (16"o.c.)
			7% (24"o.c.)
			4% (48"o.c.)
Wall Weight / sf: (Packages only)	NA		

List of Construction Components		**R-Value** Cavity (R_c)	**R-Value** Frame (R_f)
	Outside Surface Air Film	0.170	0.170
1.	0.875 in stucco	0.180	0.180
2.	Building paper (felt)	0.060	0.060
3.	R-15 fiberglass insulation	15.000	-----
4.	2x4 in fir framing	-----	3.465
5.	0.50 in gypsum or plaster board	0.450	0.450
6.			
7.			
	Inside Surface Air Film	0.680	0.680
	Total Unadjusted R-Values:	16.540	5.005
		R_c	R_f

Framing Adjustment Calculation:

$$[(\frac{1}{16.540}) \times (\frac{1-12/100}{1-(Fr.\% \div 100)})] + [(\frac{1/5.005}{1 \div R_f}) \times (\frac{12/100}{Fr.\% \div 100})] = \boxed{0.077}$$

Total U-Value

$$\frac{1/0.077}{1 \div \text{Total U-Value}} = 12.987$$

Total R-Value

Reference Name: W.15.S2x4.24

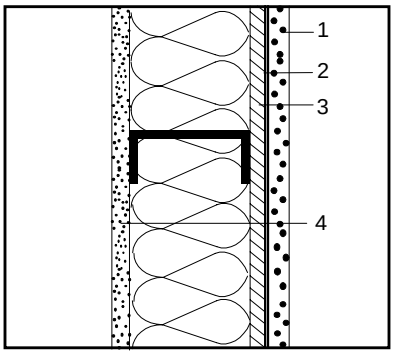

Sketch of Construction Assembly

Assembly Type: (check one)		Floor	
	✓	Wall	
		Ceiling/Roof	
Framing Material:	Metal		
Framing Spacing:	24	"o.c.	
Framing Size:	Actual Depth		3.625
	Actual Width		1.625
Cavity Insulation:	R-value		15.00
	Knock-out (%)		15.00
	Web Thickness		0.060
Insulation Tape R-value:	Interior Flange		
	Exterior Flange		

List of Construction Components		**R-Value**
	Outside Surface Air Film	0.170
1.	0.875 in stucco	0.180
2.	Building paper (felt)	0.060
3.	1 in Polyisocyanurate	7.040
4.	0.50 in gypsum or plaster board	0.450
5.		
6.		
7.		
	Inside Surface Air Film	0.680

Calculation:

From EZFRAME = **0.074**

Total U-Value

$$\frac{1/0.074}{1 \div \text{Total U-Value}} = 13.470$$

Total R-Value

Reference Name: W.19.2x6.16

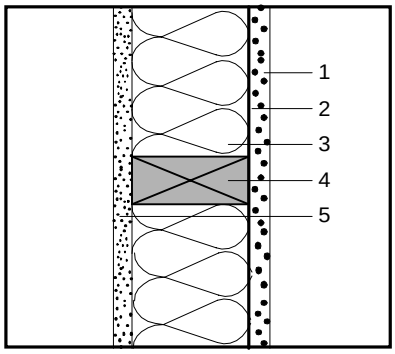

Sketch of Construction Assembly

Assembly Type: (check one)
- Floor
- ✓ Wall
- Ceiling/Roof

Framing Material: Wood

Framing Size: 2 × 6

Framing Spacing: 16 "o.c.

Framing Percentage: (check one)
- Wall: ✓ 15% (16"o.c.)
- 12% (24"o.c.)
- 9% (48"o.c.)
- Floor/Ceiling 10% (16"o.c.)
- 7% (24"o.c.)
- 4% (48"o.c.)

Wall Weight / sf: (Packages only) NA

List of Construction Components		R-Value: Cavity (R_c)	R-Value: Frame (R_f)
	Outside Surface Air Film	0.170	0.170
1.	0.875 in stucco	0.180	0.180
2.	Building paper (felt)	0.060	0.060
3.	R-19 fiberglass inuslation	19.000	-----
4.	2x6 in fir framing	-----	5.445
5.	0.50 in gypsum or plaster board	0.450	0.450
6.			
7.			
	Inside Surface Air Film	0.680	0.680
	Total Unadjusted R-Values:	20.540	6.985
		R_c	R_f

Framing Adjustment Calculation:

$$[(\frac{1/20.540}{1 \div R_c}) \times (\frac{1-15/100}{1-(Fr.\% \div 100)})] + [(\frac{1/6.985}{1 \div R_f}) \times (\frac{15/100}{Fr.\% \div 100})] = \boxed{0.063}$$

Total U-Value

$$\frac{1/0.063}{1 \div \text{Total U-Value}} = 15.873$$

Total R-Value

Reference Name: W.19.S2x6.16

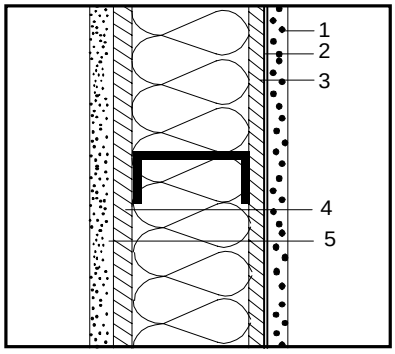

Sketch of Construction Assembly

Assembly Type: (check one)
- Floor
- ✓ Wall
- Ceiling/Roof

Framing Material: Metal

Framing Spacing: 16 "o.c.

Framing Size:
- Actual Depth 6.000
- Actual Width 1.625

Cavity Insulation:
- R-value 19.00
- Knock-out (%) 15.00
- Web Thickness 0.060

Insulation Tape R-value:
- Interior Flange
- Exterior Flange

List of Construction Components		R-Value
	Outside Surface Air Film	0.170
1.	0.875 in stucco	0.180
2.	Building paper (felt)	0.060
3.	0.75 in polyiscyanurate	5.280
4.	0.50 in polyiscyanurate	3.520
5.	0.50 in gypsum or plaster board	0.450
6.		
7.		
	Inside Surface Air Film	0.680

Calculation:

From EZFRAME = $\boxed{0.064}$

Total U-Value

$$\frac{1/0.064}{1 \div \text{Total U-Value}} = 15.530$$

Total R-Value

Reference Name: W.19.2x6.24

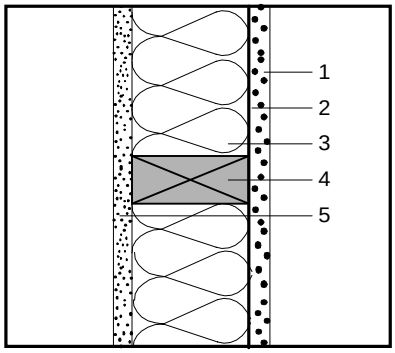

Sketch of Construction Assembly

Assembly Type: (check one)
- Floor
- ✓ Wall
- Ceiling/Roof

Framing Material: Wood

Framing Size: 2 × 6

Framing Spacing: 24 "o.c.

Framing Percentage: (check one)

Wall:
- 15% (16"o.c.)
- ✓ 12% (24"o.c.)
- 9% (48"o.c.)

Floor/Ceiling
- 10% (16"o.c.)
- 7% (24"o.c.)
- 4% (48"o.c.)

Wall Weight / sf: NA (Packages only)

List of Construction Components		R-Value: Cavity (R_c)	R-Value: Frame (R_f)
	Outside Surface Air Film	0.170	0.170
1.	0.875 in stucco	0.180	0.180
2.	Building paper (felt)	0.060	0.060
3.	R-19 fiberglass insulation	19.000	-----
4.	2x6 in fir framing	-----	5.445
5.	0.50 in gypsum or plaster board	0.450	0.450
6.			
7.			
	Inside Surface Air Film	0.680	0.680
	Total Unadjusted R-Values:	20.540	6.985
		R_c	R_f

Framing Adjustment Calculation:

$$[(\frac{1}{1 \div R_c}) \times (\frac{1-12/100}{1-(Fr.\% \div 100)})] + [(\frac{1}{1 \div R_f}) \times (\frac{12/100}{Fr.\% \div 100})] = \boxed{0.060}$$

Total U-Value

$$\frac{1/0.060}{1 \div \text{Total U-Value}} = 16.666$$

Total R-Value

Reference Name: W.19.S2x6.24

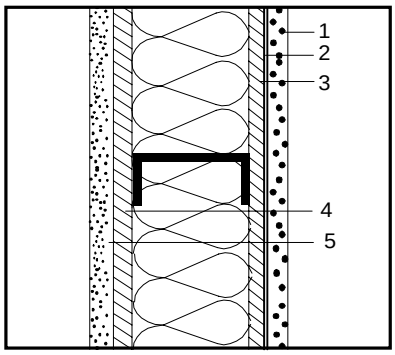

Sketch of Construction Assembly

Assembly Type: (check one)
- Floor
- ✓ Wall
- Ceiling/Roof

Framing Material: Metal

Framing Spacing: 24 "o.c.

Framing Size:
- Actual Depth: 6.000
- Actual Width: 1.625

Cavity Insulation:
- R-value: 19.00
- Knock-out (%): 15.00
- Web Thickness: 0.060

Insulation Tape R-value:
- Interior Flange:
- Exterior Flange:

List of Construction Components		R-Value
	Outside Surface Air Film	0.170
1.	0.875 in stucco	0.180
2.	Building paper (felt)	0.060
3.	0.75 in polyisocyanurate	5.280
4.	0.50 in polyisocyanurate	3.520
5.	0.50 in gypsum board	0.450
6.		
7.		
	Inside Surface Air Film	0.680

Calculation:

From EZFRAME = $\boxed{0.060}$

Total U-Value

$$\frac{1/0.060}{1 \div \text{Total U-Value}} = 16.750$$

Total R-Value

Reference Name: W.21.2x6.16

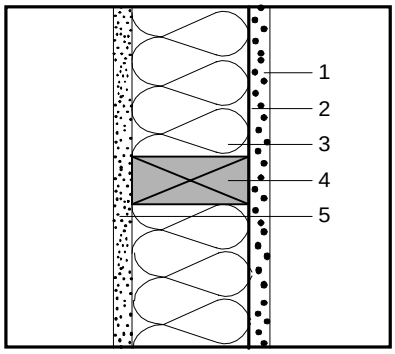

Sketch of Construction Assembly

Assembly Type: (check one)
- Floor
- ✓ Wall
- Ceiling/Roof

Framing Material: Wood

Framing Size: 2 × 6

Framing Spacing: 16 "o.c.

Framing Percentage: (check one)

Wall:
- ✓ 15% (16"o.c.)
- 12% (24"o.c.)
- 9% (48"o.c.)

Floor/Ceiling
- 10% (16"o.c.)
- 7% (24"o.c.)
- 4% (48"o.c.)

Wall Weight / sf: (Packages only) NA

List of Construction Components		R-Value: Cavity (R_c)	R-Value: Frame (R_f)
	Outside Surface Air Film	0.170	0.170
1.	0.875 in stucco	0.180	0.180
2.	Building paper (felt)	0.060	0.060
3.	R-21 fiberglass insulation	21.000	-----
4.	2x6 in fir framing	-----	5.445
5.	0.50 in gypsum or plaster board	0.450	0.450
6.			
7.			
	Inside Surface Air Film	0.680	0.680
	Total Unadjusted R-Values:	22.540	6.985
		R_c	R_f

Framing Adjustment Calculation:

$$[(\frac{1}{1 \div R_c}) \times (\frac{1-15/100}{1-(Fr.\% \div 100)})] + [(\frac{1}{1 \div Rf}) \times (\frac{15/100}{Fr.\% \div 100})] = \boxed{0.059}$$

Total U-Value

$$\frac{1/0.059}{1 \div \text{Total U-Value}} = 16.949$$

Total R-Value

Reference Name: W.21.S2x6.16

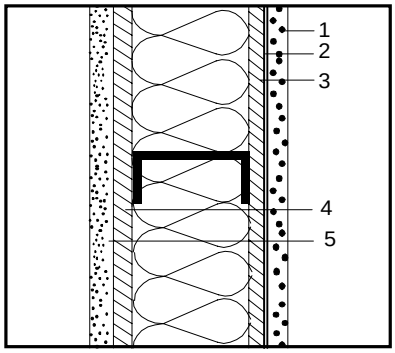

Sketch of Construction Assembly

Assembly Type: (check one)
- Floor
- ✓ Wall
- Ceiling/Roof

Framing Material: Metal

Framing Spacing: 16 "o.c.

Framing Size:
- Actual Depth: 6.000
- Actual Width: 1.625

Cavity Insulation:
- R-value: 21.00
- Knock-out (%): 15.00
- Web Thickness: 0.060

Insulation Tape R-value:
- Interior Flange:
- Exterior Flange:

List of Construction Components		R-Value
	Outside Surface Air Film	0.170
1.	0.875 in stucco	0.180
2.	Building paper (felt)	0.060
3.	1.0 in polyisocyanurate	7.040
4.	0.5 in polyisocyanurate	3.520
5.	0.50 in gypsum or plaster board	0.450
6.		
7.		
	Inside Surface Air Film	0.680

Calculation:

From EZFRAME = **0.057**

Total U-Value

$$\frac{1/0.057}{1 \div \text{Total U-Value}} = 17.440$$

Total R-Value

Reference Name: W.21.2x6.24

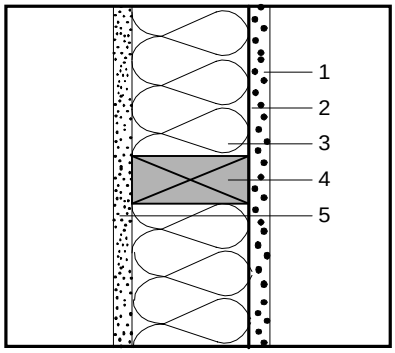

Sketch of Construction Assembly

Assembly Type: (check one)
- Floor
- ✓ Wall
- Ceiling/Roof

Framing Material: Wood

Framing Size: 2 × 6

Framing Spacing: 24 "o.c.

Framing Percentage: (check one)

Wall:
- 15% (16"o.c.)
- ✓ 12% (24"o.c.)
- 9% (48"o.c.)

Floor/Ceiling
- 10% (16"o.c.)
- 7% (24"o.c.)
- 4% (48"o.c.)

Wall Weight / sf: NA (Packages only)

List of Construction Components		R-Value: Cavity (R_c)	R-Value: Frame (R_f)
	Outside Surface Air Film	0.170	0.170
1.	0.875 in stucco	0.180	0.180
2.	Building paper (felt)	0.060	0.060
3.	R-21 fiberglass insulation	21.000	-----
4.	2x6 in fir framing	-----	5.445
5.	0.50 in gypsum or plaster board	0.450	0.450
6.			
7.			
	Inside Surface Air Film	0.680	0.680
	Total Unadjusted R-Values:	22.540	6.985
		R_c	R_f

Framing Adjustment Calculation:

$$[(\underset{1 \div Rc}{1/22.540}) \times (\underset{1-(Fr.\% \div 100)}{1-12/100})] + [(\underset{1 \div R_f}{1/6.985}) \times (\underset{Fr.\% \div 100}{12/100})] = \boxed{0.056}$$

Total U-Value

$$\underset{1 \div \text{Total U-Value}}{1/0.056} = \underset{\textbf{Total R-Value}}{17.857}$$

Reference Name: W.21.S2x6.24

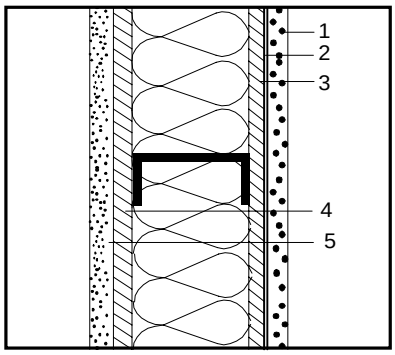

Sketch of Construction Assembly

Assembly Type: (check one)
- Floor
- ✓ Wall
- Ceiling/Roof

Framing Material: Metal

Framing Spacing: 24 "o.c.

Framing Size:
- Actual Depth: 6.000
- Actual Width: 1.625

Cavity Insulation:
- R-value: 21.000
- Knock-out (%): 15.000
- Web Thickness: 0.060

Insulation Tape R-value:
- Interior Flange:
- Exterior Flange:

List of Construction Components		R-Value
	Outside Surface Air Film	0.170
1.	0.875 in stucco	0.180
2.	Building paper (felt)	0.060
3.	1.0 in polyisocyanurate	7.040
4.	0.5 in polyisocyanurate	3.520
5.	0.50 in gypsum or plaster board	0.450
6.		
7.		
	Inside Surface Air Film	0.680

Calculation:

From EZFRAME = $\boxed{0.053}$

Total U-Value

$$\underset{1 \div \text{Total U-Value}}{1/0.053} = \underset{\textbf{Total R-Value}}{18.720}$$

Reference Name: WP.22.2x6.48

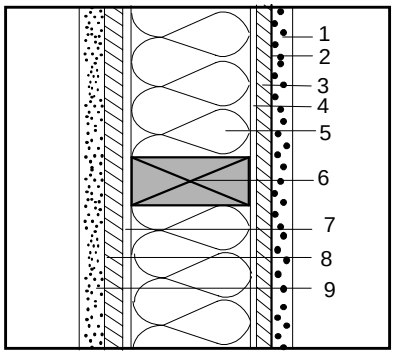

Sketch of Construction Assembly

Assembly Type: (check one)
- Floor
- ✓ Wall
- Ceiling/Roof

Framing Material: Wood

Framing Size: 2 × 6

Framing Spacing: 48 "o.c.

Framing Percentage: (check one)
- Wall: 15% (16"o.c.)
- Wall: 12% (24"o.c.)
- Wall: ✓ 9% (48"o.c.)
- Floor/Ceiling: 10% (16"o.c.)
- Floor/Ceiling: 7% (24"o.c.)
- Floor/Ceiling: 4% (48"o.c.)

Wall Weight / sf: NA (Packages only)

List of Construction Components		**R-Value** Cavity (R_c)	Frame (R_f)
	Outside Surface Air Film	0.170	0.170
1.	0.875 in stucco	0.180	0.180
2.	Building paper (felt)	0.060	0.060
3.	0.375 in plywood	0.470	0.470
4.	0.875 in Furring Channel	0.800	0.800
5.	R-21.656 EPS foam insulation	21.656	-----
6.	2x6 in fir framing	-----	5.445
7.	0.875 in Furring Channel	0.800	0.800
8.	0.375 in plywood	0.470	0.470
9.	0.50 in gypsum or plaster board	0.450	0.450
	Inside Surface Air Film	0.680	0.680
	Total Unadjusted R-Values:	25.736	9.525
		R_c	R_f

Framing Adjustment Calculation:

$$[(\frac{1}{1+R_c}) \times (\frac{1-9/100}{1-(Fr.\% \div 100)})] + [(\frac{1}{1+R_f}) \times (\frac{9}{Fr.\% \div 100})] = \boxed{0.049}$$

Total U-Value

$$\frac{1/0.049}{1 \div \text{Total U-Value}} = 20.408$$

Total R-Value

Reference Name: WP.22.S2x6.48

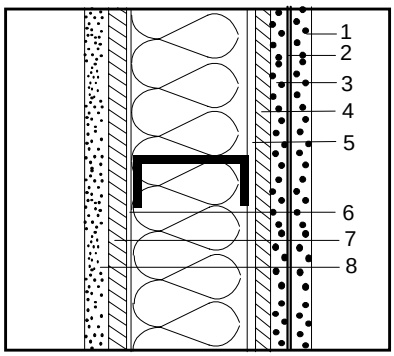

Sketch of Construction Assembly

Assembly Type: (check one)
- Floor
- ✓ Wall
- Ceiling/Roof

Framing Material: Metal

Framing Spacing: 48 "o.c.

Framing Size:
- Actual Depth: 6.000
- Actual Width: 1.625

Cavity Insulation:
- R-value: 21.700
- Knock-out (%): 15.00
- Web Thickness: 0.060

Insulation Tape R-value:
- Interior Flange:
- Exterior Flange:

List of Construction Components		**R-Value**
	Outside Surface Air Film	0.170
1.	0.875 in stucco	0.180
2.	Building paper (felt)	0.060
3.	1.50 in polyisocyanurate	10.560
4.	0.50 in plywood	0.630
5.	0.875 in Furring channel	0.800
6.	0.875 in Furring channel	0.800
7.	0.50 in plywood	0.630
8.	0.50 in gypsum or plaster board	0.450
	Inside Surface Air Film	0.680

Calculation:

From EZFRAME = $\boxed{0.044}$

Total U-Value

$$\frac{1/0.044}{1 \div \text{Total U-Value}} = 22.83$$

Total R-Value

Reference Name: R.0.2x6.16

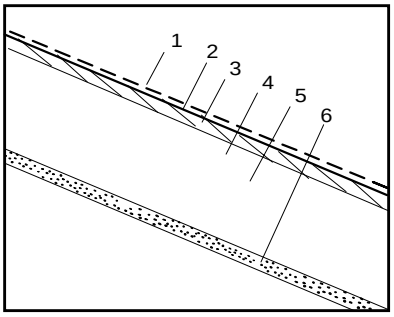

Sketch of Construction Assembly

Assembly Type: (check one)
- ____ Floor
- ____ Wall
- ✓ Ceiling/Roof

Framing Material: Wood

Framing Size: 2 × 6

Framing Spacing: 16 "o.c.

Framing Percentage: (check one)

Wall:	____	15% (16"o.c.)
	____	12% (24"o.c.)
	____	9% (48"o.c.)
Floor/Ceiling	✓	10% (16"o.c.)
	____	7% (24"o.c.)
	____	4% (48"o.c.)

Wall Weight / sf: NA (Packages only)

List of Construction Components		R-Value: Cavity (R_c)	R-Value: Frame (R_f)
	Outside Surface Air Film	0.170	0.170
1.	Asphalt shingle roofing	0.440	0.440
2.	Building paper (felt)	0.060	0.060
3.	0.50 in plywood	0.630	0.630
4.	3.5 in & greater air space; heat flow up	0.800	-----
5.	2x6 in fir framing	-----	5.445
6.	0.50 in gypsum or plaster board	0.450	0.450
7.			
	Inside Surface Air Film	0.620	0.620
	Total Unadjusted R-Values:	3.170 (R_c)	7.815 (R_f)

Framing Adjustment Calculation:

$$[(\underline{1/3.170}) \times (\underline{1-10/100})] + [(\underline{1/7.815}) \times (\underline{10/100})] = \boxed{0.297}$$

($1 \div R_c$; 1-(Fr.% ÷100); $1 \div R_f$; Fr.% ÷100)

Total U-Value

$$\frac{1/0.297}{1 \div \text{Total U-Value}} = 3.367$$

Total R-Value

Reference Name: R.0.S2X6.16

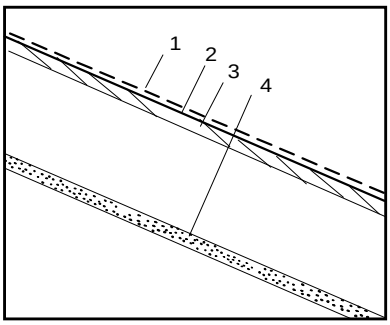

Sketch of Construction Assembly

Assembly Type: (check one)
- ____ Floor
- ____ Wall
- ✓ Ceiling/Roof

Framing Material: Metal

Framing Spacing: 16 "o.c.

Framing Size:
- Actual Depth: 6.000
- Actual Width: 1.625

Cavity Insulation:
- R-value: 0.800
- Knock-out (%): 15.000
- Web Thickness: 0.060

Insulation Tape R-value:
- Interior Flange: ____
- Exterior Flange: ____

List of Construction Components		R-Value
	Outside Surface Air Film	0.170
1.	Asphalt shingle roofing	0.440
2.	Building paper (felt)	0.060
3.	0.50 in plywood	0.630
4.	0.50 in gypsum or plaster board	0.450
5.		
6.		
7.		
	Inside Surface Air Film	0.620

Calculation:

From EZFRAME = **0.323**

Total U-Value

$$\frac{1/0.323}{1 \div \text{Total U-Value}} = 3.090$$

Total R-Value

Reference Name: R.0.2x4.24

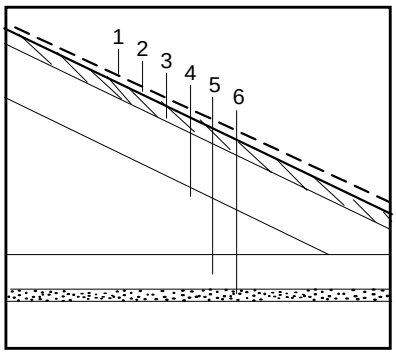

Sketch of Construction Assembly

Assembly Type: (check one)
- ___ Floor
- ___ Wall
- ✓ Ceiling/Roof

Framing Material: Wood

Framing Size: 2 × 4

Framing Spacing: 24 "o.c.

Framing Percentage: (check one)
- Wall: ___ 15% (16"o.c.)
- ___ 12% (24"o.c.)
- ___ 9% (48"o.c.)
- Floor/Ceiling ___ 10% (16"o.c.)
- ✓ 7% (24"o.c.)
- ___ 4% (48"o.c.)

Wall Weight / sf: NA (Packages only)

List of Construction Components		R-Value: Cavity (R_c)	R-Value: Frame (R_f)
	Outside Surface Air Film	0.170	0.170
1.	Asphalt shingle roofing	0.440	0.440
2.	Building paper (felt)	0.060	0.060
3.	0.50 in plywood	0.630	0.630
4.	3.5" & greater air space; heat sidways	0.800	0.800
5.	2x4 in fir framing	-----	3.465
6.	0.50 in gypsum or plaster board	0.450	0.450
7.			
	Inside Surface Air Film	0.610	0.610
	Total Unadjusted R-Values:	3.160	6.625
		R_c	R_f

Framing Adjustment Calculation:

$$\left[\left(\frac{1/3.160}{1 \div R_c}\right) \times \left(\frac{1-7/100}{1-(Fr.\% \div 100)}\right)\right] + \left[\left(\frac{1/6.625}{1 \div R_f}\right) \times \left(\frac{7/100}{Fr.\% \div 100}\right)\right] = \boxed{0.305}$$

Total U-Value

$$\frac{1/0.305}{1 \div \text{Total U-Value}} = \frac{3.279}{\text{Total R-Value}}$$

Reference Name: R.0.S2X4.24

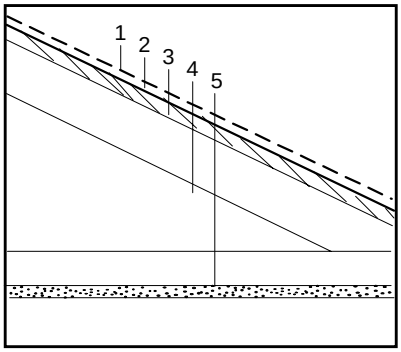

Sketch of Construction Assembly

Assembly Type: (check one)
- ___ Floor
- ___ Wall
- ✓ Ceiling/Roof

Framing Material: Metal

Framing Spacing: 24 "o.c.

Framing Size:
- Actual Depth: 3.625
- Actual Width: 1.625

Cavity Insulation:
- R-value: 0.800
- Knock-out (%): 15.00
- Web Thickness: 0.060

Insulation Tape R-value:
- Interior Flange: ___
- Exterior Flange: ___

List of Construction Components		R-Value
	Outside Surface Air Film	0.170
1.	Asphalt shingle roofing	0.440
2.	Building paper (felt)	0.060
3.	0.50 in plywood	0.630
4.	3.5" & greater air space; heat sidways	0.800
5.	0.50 in gypsum or plaster board	0.450
6.		
7.		
	Inside Surface Air Film	0.610

Calculation:

From EZFRAME = **0.316**

Total U-Value

$$\frac{1/0.316}{1 \div \text{Total U-Value}} = \frac{3.160}{\text{Total R-Value}}$$

Reference Name: R.11.2x6.16

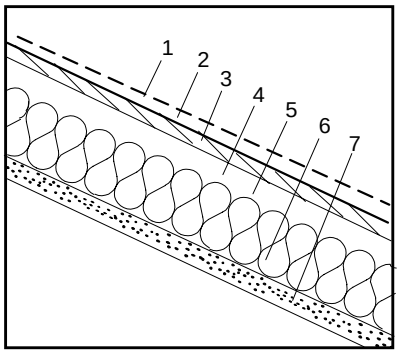

Sketch of Construction Assembly

Assembly Type: (check one)
- ___ Floor
- ___ Wall
- ✓ Ceiling/Roof

Framing Material: Wood

Framing Size: 2 × 6

Framing Spacing: 16 "o.c.

Framing Percentage: (check one)
- Wall: ___ 15% (16"o.c.)
- ___ 12% (24"o.c.)
- ___ 9% (48"o.c.)
- Floor/Ceiling: ✓ 10% (16"o.c.)
- ___ 7% (24"o.c.)
- ___ 4% (48"o.c.)

Wall Weight / sf: NA (Packages only)

List of Construction Components		R-Value: Cavity (R_c)	R-Value: Frame (R_f)
	Outside Surface Air Film	0.170	0.170
1.	Asphalt shingle roofing	0.440	0.440
2.	Building paper (felt)	0.060	0.060
3.	0.50 in plywood	0.630	0.630
4.	2.0 in air space; heat flow up	0.780	-----
5.	2x6 in fir framing	-----	5.445
6.	R-11 fiberglass insulation	11.000	-----
7.	0.50 in gypsum or plaster board	0.450	0.450
	Inside Surface Air Film	0.620	0.620
	Total Unadjusted R-Values:	14.150	7.815
		R_c	R_f

Framing Adjustment Calculation:

$$[(\frac{1}{14.150}) \times (\frac{1-10/100}{1-(Fr.\% \div 100)})] + [(\frac{1}{7.815}) \times (\frac{10/100}{Fr.\% \div 100})] = \boxed{0.076}$$

$1 \div R_c$ $1 \div R_f$

Total U-Value

$$\frac{1/0.076}{1 \div \text{Total U-Value}} = \frac{13.157}{\text{Total R-Value}}$$

Reference Name: R.11.S2X6.16

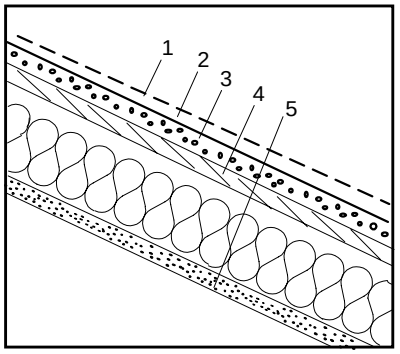

Sketch of Construction Assembly

Assembly Type: (check one)
- ___ Floor
- ___ Wall
- ✓ Ceiling/Roof

Framing Material: Metal

Framing Spacing: 16 "o.c.

Framing Size:
- Actual Depth: 6.000
- Actual Width: 1.625

Cavity Insulation:
- R-value: 11.800
- Knock-out (%): 15.000
- Web Thickness: 0.060

Insulation Tape R-value:
- Interior Flange: ___
- Exterior Flange: ___

List of Construction Components		R-Value
	Outside Surface Air Film	0.170
1.	Asphalt shingle	0.440
2.	Building paper (felt)	0.060
3.	0.75 in Polyisocyanurate	5.280
4.	0.625 in Plywood	0.780
5.	0.50 in gypsum or plaster board	0.450
6.		
7.		
	Inside Surface Air Film	0.620

Calculation:

From EZFRAME = **0.071**

Total U-Value

$$\frac{1/0.071}{1 \div \text{Total U-Value}} = \frac{14.060}{\text{Total R-Value}}$$

Reference Name: R.11.2x4.24

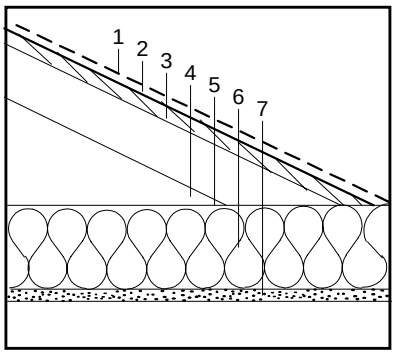

Sketch of Construction Assembly

Assembly Type: (check one)
- ___ Floor
- ___ Wall
- ✓ Ceiling/Roof

Framing Material: Wood

Framing Size: 2 × 4

Framing Spacing: 24 "o.c.

Framing Percentage: (check one)

Wall:	___	15% (16"o.c.)
	___	12% (24"o.c.)
	___	9% (48"o.c.)
Floor/Ceiling	___	10% (16"o.c.)
	✓	7% (24"o.c.)
	___	4% (48"o.c.)

Wall Weight / sf: NA
(Packages only)

List of Construction Components		R-Value: Cavity (R_c)	R-Value: Frame (R_f)
	Outside Surface Air Film	0.170	0.170
1.	Asphalt shingle roofing	0.440	0.440
2.	Building paper (felt)	0.060	0.060
3.	0.50 in plywood	0.630	0.630
4.	3.50 in & greater air space; heat flow up	0.800	0.800
5.	R-11 fiberglass insulation	11.000	-----
6.	2x4 in fir framing	-----	3.465
7.	0.50 in gypsum or plaster board	0.450	0.450
	Inside Surface Air Film	0.610	0.610
	Total Unadjusted R-Values:	14.160	6.625
		R_c	R_f

Framing Adjustment Calculation:

$$[(\frac{1}{14.160}) \times (\frac{1-7}{100})] + [(\frac{1}{6.625}) \times (\frac{7}{100})] =$$

($1 \div R_c$; 1-(Fr.% ÷100); $1 \div R_f$; Fr.% ÷100)

0.076
Total U-Value

$$\frac{1}{0.076} = 13.157$$

(1÷Total U-Value) = **Total R-Value**

Reference Name: R.11.S2X4.24

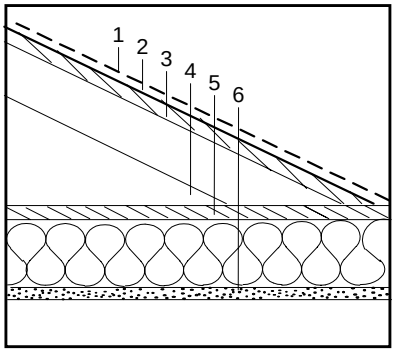

Sketch of Construction Assembly

Assembly Type: (check one)
- ___ Floor
- ___ Wall
- ✓ Ceiling/Roof

Framing Material: Metal

Framing Spacing: 24 "o.c.

Framing Size:
- Actual Depth: 3.625
- Actual Width: 1.625

Cavity Insulation:
- R-value: 11.000
- Knock-out (%): 15.000
- Web Thickness: 0.060

Insulation Tape R-value:
- Interior Flange: ___
- Exterior Flange: ___

List of Construction Components		R-Value
	Outside Surface Air Film	0.170
1.	Asphalt shingle roofing	0.440
2.	Building paper (felt)	0.060
3.	0.50 in plywood	0.630
4.	3.50 in & greater air space; heat flow up	0.800
5.	0.75 in Polyisocyanurate	5.280
6.	0.50 in gypsum or plaster board	0.450
7.		
	Inside Surface Air Film	0.610

Calculation:

From EZFRAME = **0.069**
Total U-Value

$$\frac{1}{0.069} = 14.500$$

(1÷Total U-Value) = **Total R-Value**

Reference Name: R.13.2x6.16

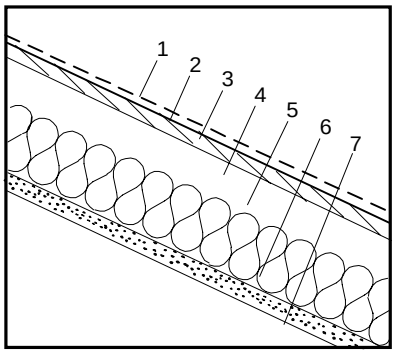

Sketch of Construction Assembly

Assembly Type: (check one)
- ___ Floor
- ___ Wall
- ✓ Ceiling/Roof

Framing Material: Wood

Framing Size: 2 × 6

Framing Spacing: 16 "o.c.

Framing Percentage: (check one)

Wall:	___	15% (16"o.c.)
	___	12% (24"o.c.)
	___	9% (48"o.c.)
Floor/Ceiling	✓	10% (16"o.c.)
	___	7% (24"o.c.)
	___	4% (48"o.c.)

Wall Weight / sf: NA
(Packages only)

List of Construction Components		R-Value: Cavity (R_c)	R-Value: Frame (R_f)
	Outside Surface Air Film	0.170	0.170
1.	Asphalt shingle roofing	0.440	0.440
2.	Building paper (felt)	0.060	0.060
3.	0.50 in plywood	0.630	0.630
4.	2.0 in air space; heat flow up	0.780	-----
5.	2x6 in fir framing	-----	5.445
6.	R-13 fiberglass insulation	13.000	-----
7.	0.50 in gypsum or plaster board	0.450	0.450
	Inside Surface Air Film	0.620	0.620
	Total Unadjusted R-Values:	16.150	7.815
		R_c	R_f

Framing Adjustment Calculation:

$$[(\frac{1}{16.150}) \times (\frac{1-10}{100})] + [(\frac{1}{7.815}) \times (\frac{10}{100})] = 0.069$$

($1 \div R_c$; 1-(Fr.% ÷100); $1 \div R_f$; Fr.% ÷100)

Total U-Value

$$\frac{1/0.069}{1 \div \text{Total U-Value}} = 14.493$$

Total R-Value

Reference Name: R.13.S2X6.16

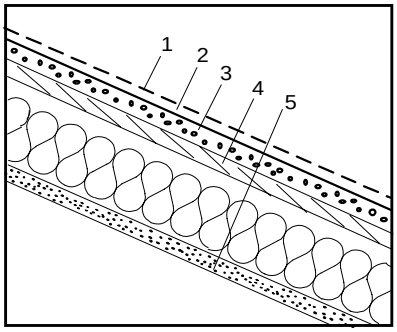

Sketch of Construction Assembly

Assembly Type: (check one)
- ___ Floor
- ___ Wall
- ✓ Ceiling/Roof

Framing Material: Metal

Framing Spacing: 16 "o.c.

Framing Size:
- Actual Depth: 6.000
- Actual Width: 1.625

Cavity Insulation:
- R-value: 13.800
- Knock-out (%): 15.000
- Web Thickness: 0.060

Insulation Tape R-value:
- Interior Flange: ___
- Exterior Flange: ___

List of Construction Components		R-Value
	Outside Surface Air Film	0.170
1.	Asphalt shingle roofing	0.440
2.	Building paper (felt)	0.060
3.	1.00 in polyisocyanurate	7.040
4.	0.50 in plywood	0.630
5.	0.50 in gypsum or plaster board	0.450
6.		
7.		
	Inside Surface Air Film	0.620

Calculation:

From EZFRAME = **0.062**

Total U-Value

$$\frac{1/0.062}{1 \div \text{Total U-Value}} = 16.130$$

Total R-Value

Reference Name: R.13.2x4.24

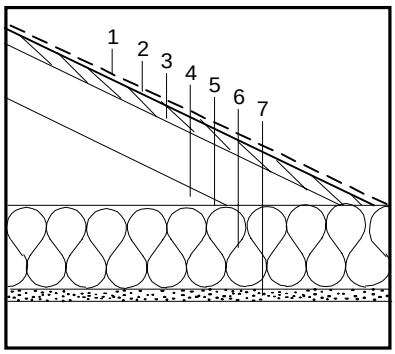

Sketch of Construction Assembly

Assembly Type: (check one)
- ___ Floor
- ___ Wall
- ✓ Ceiling/Roof

Framing Material: Wood

Framing Size: 2 × 4

Framing Spacing: 24 "o.c.

Framing Percentage: (check one)
- Wall: ___ 15% (16"o.c.)
- ___ 12% (24"o.c.)
- ___ 9% (48"o.c.)
- Floor/Ceiling ___ 10% (16"o.c.)
- ✓ 7% (24"o.c.)
- ___ 4% (48"o.c.)

Wall Weight / sf: (Packages only) NA

List of Construction Components		R-Value: Cavity (R_c)	R-Value: Frame (R_f)
	Outside Surface Air Film	0.170	0.170
1.	Asphalt shingle roofing	0.440	0.440
2.	Building paper (felt)	0.060	0.060
3.	0.50 in plywood	0.630	0.630
4.	3.50 in & greater air space; heat flow up	0.800	0.800
5.	R-13 fiberglass insulation	13.000	-----
6.	2x4 in fir framing	-----	3.465
7.	0.50 in gypsum or plaster board	0.450	0.450
	Inside Surface Air Film	0.610	0.610
	Total Unadjusted R-Values:	16.160	6.625
		R_c	R_f

Framing Adjustment Calculation:

$$[(\underset{1\div R_c}{1/16.160}) \times (\underset{1-(Fr.\%\div 100)}{1-7/100})] + [(\underset{1\div R_f}{1/6.625}) \times (\underset{Fr.\%\div 100}{7/100})] = \boxed{0.068}$$

Total U-Value

$$\underset{1\div \text{Total U-Value}}{1/0.068} = \underset{\textbf{Total R-Value}}{14.705}$$

Reference Name: R.13.S2X4.24

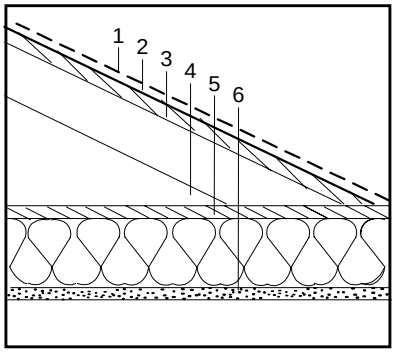

Sketch of Construction Assembly

Assembly Type: (check one)
- ___ Floor
- ___ Wall
- ✓ Ceiling/Roof

Framing Material: Metal

Framing Spacing: 24 "o.c.

Framing Size:
- Actual Depth 3.625
- Actual Width 1.625

Cavity Insulation:
- R-value 13.000
- Knock-out (%) 15.000
- Web Thickness 0.060

Insulation Tape R-value:
- Interior Flange ___
- Exterior Flange ___

List of Construction Components		R-Value
	Outside Surface Air Film	0.170
1.	Asphalt shingle roofing	0.440
2.	Building paper (felt)	0.060
3.	0.50 in plywood	0.630
4.	3.50 in & greater air space; heat flow up	0.800
5.	0.75 in Polyisocyanurate	5.280
6.	0.50 in gypsum or plaster board	0.450
7.		
	Inside Surface Air Film	0.610

Calculation:

From EZFRAME = $\boxed{0.066}$

Total U-Value

$$\underset{1\div \text{Total U-Value}}{1/0.066} = \underset{\textbf{Total R-Value}}{15.100}$$

Reference Name: RP.14.2x4.48

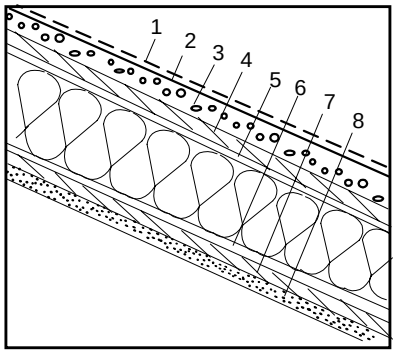

Sketch of Construction Assembly

Assembly Type: (check one)
- ___ Floor
- ___ Wall
- ✓ Ceiling/Roof

Framing Material: Wood

Framing Size: 2 × 4

Framing Spacing: 48 "o.c.

Framing Percentage: (check one)

Wall:	___	15% (16"o.c.)
	___	12% (24"o.c.)
	___	9% (48"o.c.)
Floor/Ceiling	___	10% (16"o.c.)
	___	7% (24"o.c.)
	✓	4% (48"o.c.)

Wall Weight / sf: NA (Packages only)

List of Construction Components		R-Value: Cavity (R_c)	R-Value: Frame (R_f)
	Outside Surface Air Film	0.170	0.170
1.	Asphalt shingle roofing	0.440	0.440
2.	Building paper (felt)	0.060	0.060
3.	0.375 in plywood	0.470	0.470
4.	7/8 in furring channel	0.800	0.800
5.	2x4 in fir framing	-----	3.465
6.	3 5/8 in EPS foam insulation @3.85/inch	13.956	-----
7.	7/8 in furring channel	0.800	0.800
8.	0.375 in plywood	0.470	0.470
9.	0.50 in gypsum or plaster board	0.450	0.450
	Inside Surface Air Film	0.620	0.620
	Total Unadjusted R-Values:	18.236	7.745
		R_c	R_f

Framing Adjustment Calculation:

$$[(\underset{1 \div R_c}{\underline{1/18.236}}) \times (\underset{1-(Fr.\% \div 100)}{\underline{1-4/100}})] + [(\underset{1 \div R_f}{\underline{1/7.745}}) \times (\underset{Fr.\% \div 100}{\underline{4/100}})] = \boxed{0.058}$$

Total U-Value

$$\underset{1 \div \text{Total U-Value}}{\underline{1/0.058}} = \underset{\textbf{Total R-Value}}{\underline{17.241}}$$

Reference Name: RP.14.S2x4.48

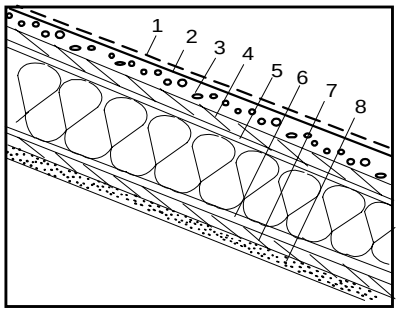

Sketch of Construction Assembly

Assembly Type: (check one)
- ___ Floor
- ___ Wall
- ✓ Ceiling/Roof

Framing Material: Metal

Framing Spacing: 48 "o.c.

Framing Size:

Actual Depth	3.625
Actual Width	1.625

Cavity Insulation:

R-value	14.000
Knock-out (%)	15.000
Web Thickness	0.060

Insulation Tape R-value:

Interior Flange	
Exterior Flange	

List of Construction Components		R-Value
	Outside Surface Air Film	0.170
1.	Asphalt shingle roofing	0.440
2.	Building paper	0.060
3.	0.75 in polyisocyanurate	5.280
4.	3/8 in plywood	0.470
5.	7/8 in furring channel	0.800
6.	7/8 in furring channel	0.800
7.	3/8 in plywood	0.470
8.	1/2 in gypsum or plaster board	0.450
	Inside Surface Air Film	0.620

Calculation:

From EZFRAME = $\boxed{0.055}$

Total U-Value

$$\underset{1 \div \text{Total U-Value}}{\underline{1/0.055}} = \underset{\textbf{Total R-Value}}{\underline{18.130}}$$

Reference Name: R.19.2x8.16

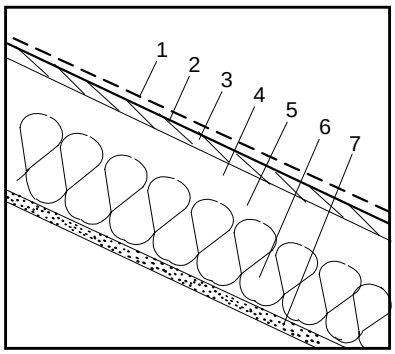

Sketch of Construction Assembly

Assembly Type: (check one)
- ___ Floor
- ___ Wall
- ✓ Ceiling/Roof

Framing Material: Wood

Framing Size: 2 × 8

Framing Spacing: 16 "o.c.

Framing Percentage: (check one)
- Wall: ___ 15% (16"o.c.)
- ___ 12% (24"o.c.)
- ___ 9% (48"o.c.)
- Floor/Ceiling ✓ 10% (16"o.c.)
- ___ 7% (24"o.c.)
- ___ 4% (48"o.c.)

Wall Weight / sf: (Packages only) NA

List of Construction Components		R-Value: Cavity (R_c)	R-Value: Frame (R_f)
	Outside Surface Air Film	0.170	0.170
1.	Asphalt shingle roofing	0.440	0.440
2.	Building paper (felt)	0.060	0.060
3.	0.50 in plywood	0.630	0.630
4.	1.0 in air space; heat flow up	0.760	-----
5.	2x8 in fir framing	-----	7.178
6.	R-19 fiberglass insulation	19.000	-----
7.	0.50 in gypsum or plaster board	0.450	0.450
	Inside Surface Air Film	0.620	0.620
	Total Unadjusted R-Values:	22.130	9.548
		R_c	R_f

Framing Adjustment Calculation:

$$[(\underset{1\div R_c}{\underline{1/22.130}}) \times (\underset{1-(Fr.\%\div 100)}{\underline{1-10/100}})] + [(\underset{1\div R_f}{\underline{1/9.548}}) \times (\underset{Fr.\%\div 100}{\underline{10/100}})] =$$

0.051

Total U-Value

$$\frac{1/0.051}{1\div \text{Total U-Value}} = \frac{19.608}{\text{Total R-Value}}$$

Reference Name: R.19.S2x8.16

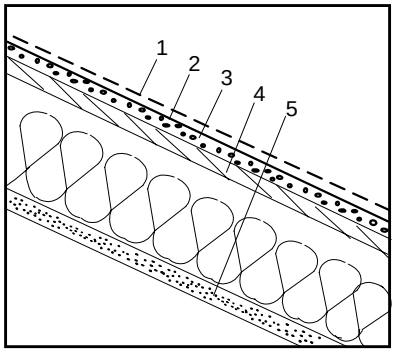

Sketch of Construction Assembly

Assembly Type: (check one)
- ___ Floor
- ___ Wall
- ✓ Ceiling/Roof

Framing Material: Metal

Framing Spacing: 16 "o.c.

Framing Size:
- Actual Depth: 8.000
- Actual Width: 1.625

Cavity Insulation:
- R-value: 19.800
- Knock-out (%): 15.000
- Web Thickness: 0.060

Insulation Tape R-value:
- Interior Flange: ___
- Exterior Flange: ___

List of Construction Components		R-Value
	Outside Surface Air Film	0.170
1.	Asphalt shingle roofing	0.440
2.	Building Paper	0.060
3.	1.25 in Polyisocyanurate	8.800
4.	0.5 in plywood	0.630
5.	0.50 in Gypsum board	0.450
6.		
7.		
	Inside Surface Air Film	0.620

Calculation:

From EZFRAME = **0.051**

Total U-Value

$$\frac{1/0.051}{1\div \text{Total U-Value}} = \frac{19.760}{\text{Total R-Value}}$$

Reference Name: R.19.2x4.24

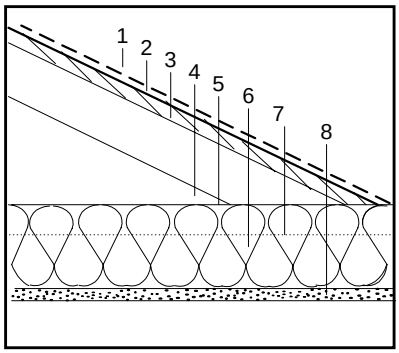

Sketch of Construction Assembly

Assembly Type: (check one)
- ___ Floor
- ___ Wall
- ✓ Ceiling/Roof

Framing Material: Wood

Framing Size: 2 × 4

Framing Spacing: 24 "o.c.

Framing Percentage: (check one)

Wall:	___	15% (16"o.c.)
	___	12% (24"o.c.)
	___	9% (48"o.c.)
Floor/Ceiling	___	10% (16"o.c.)
	✓	7% (24"o.c.)
	___	4% (48"o.c.)

Wall Weight / sf: NA
(Packages only)

List of Construction Components		R-Value: Cavity (R_c)	R-Value: Frame (R_f)
	Outside Surface Air Film	0.170	0.170
1.	Asphalt shingle roofing	0.440	0.440
2.	Building paper (felt)	0.060	0.060
3.	0.50 in plywood	0.630	0.630
4.	3.50 in & greater air space; heat flow up	0.800	0.800
5.	R-8 fiberglass insulation	8.000	8.000
6.	R-11 fiberglass insulation	11.000	-----
7.	2x4 in fir framing	------	3.465
8.	0.50 in gypsum or plaster board	0.450	0.450
	Inside Surface Air Film	0.610	0.610
	Total Unadjusted R-Values:	22.160	14.625
		R_c	R_f

Framing Adjustment Calculation:

$$[(\frac{1/22.160}{1 \div R_c}) \times (\frac{1-7/100}{1-(Fr.\% \div 100)})] + [(\frac{1/14.625}{1 \div R_f}) \times (\frac{7/100}{Fr.\% \div 100})] = \boxed{0.047}$$

Total U-Value

$$\frac{1/0.047}{1 \div \text{Total U-Value}} = 21.277$$

Total R-Value

Reference Name: R.19.S2x4.24

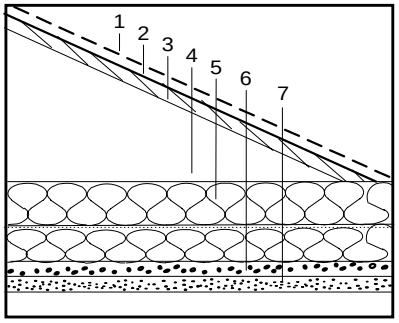

Sketch of Construction Assembly

Assembly Type: (check one)
- ___ Floor
- ___ Wall
- ✓ Ceiling/Roof

Framing Material: Metal

Framing Spacing: 24 "o.c.

Framing Size:

Actual Depth	3.625
Actual Width	1.625

Cavity Insulation:

R-value	11.000
Knock-out (%)	15.000
Web Thickness	0.060

Insulation Tape R-value:

Interior Flange	___
Exterior Flange	___

List of Construction Components		R-Value
	Outside Surface Air Film	0.170
1.	Asphalt shingle roofing	0.440
2.	Building paper (felt)	0.060
3.	0.625 in Plywood	0.780
4.	3.5 in Air, Ceiling	0.800
5.	R-8 fiberglass insulation	8.000
6.	0.75 in polyisocyanurate	5.280
7.	0.50 in Gypsum board	0.450
	Inside Surface Air Film	0.610

Calculation:

From EZFRAME = **0.044**

Total U-Value

$$\frac{1/0.044}{1 \div \text{Total U-Value}} = 22.670$$

Total R-Value

Reference Name: R.22.2x10.16

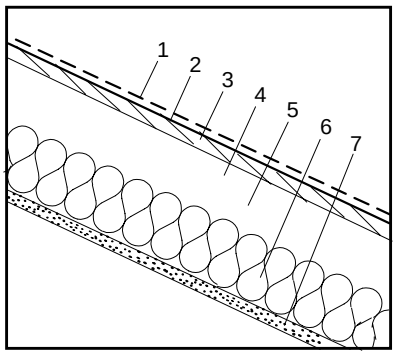

Sketch of Construction Assembly

Assembly Type: (check one)
- ___ Floor
- ___ Wall
- ✓ Ceiling/Roof

Framing Material: Wood

Framing Size: 2 × 10

Framing Spacing: 16 "o.c.

Framing Percentage: (check one)

Wall:	___	15% (16"o.c.)
	___	12% (24"o.c.)
	___	9% (48"o.c.)
Floor/Ceiling	✓	10% (16"o.c.)
	___	7% (24"o.c.)
	___	4% (48"o.c.)

Wall Weight / sf: (Packages only) NA

List of Construction Components		R-Value: Cavity (R_c)	R-Value: Frame (R_f)
	Outside Surface Air Film	0.170	0.170
1.	Asphalt shingle roofing	0.440	0.440
2.	Building paper (felt)	0.060	0.060
3.	0.50 in plywood	0.630	0.630
4.	3.5" & greater air space; heat sideways	0.620	0.620
5.	2x10 in fir framing	-----	9.158
6.	R-22 fiberglass insulation	22.000	-----
7.	0.50 in gypsum or plaster board	0.450	0.450
	Inside Surface Air Film	0.620	0.620
	Total Unadjusted R-Values:	24.990	12.148
		R_c	R_f

Framing Adjustment Calculation:

$$[(\underset{1\div R_c}{\underline{1/24.990}}) \times (\underset{1-(Fr.\%\div 100)}{\underline{1-10/100}})] + [(\underset{1\div R_f}{\underline{1/12.148}}) \times (\underset{Fr.\%\div 100}{\underline{10/100}})] = \boxed{0.044}$$

Total U-Value

$$\frac{1/0.044}{1\div \text{Total U-Value}} = \underset{\textbf{Total R-Value}}{22.727}$$

Reference Name: R.22.S2x10.16

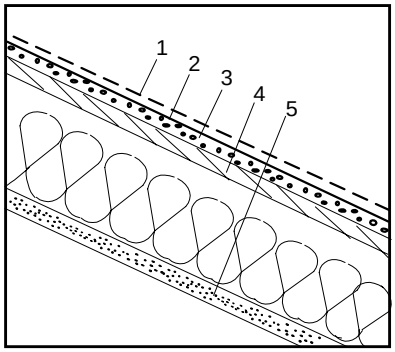

Sketch of Construction Assembly

Assembly Type: (check one)
- ___ Floor
- ___ Wall
- ✓ Ceiling/Roof

Framing Material: Metal

Framing Spacing: 16 "o.c.

Framing Size:

Actual Depth	10.000
Actual Width	1.625

Cavity Insulation:

R-value	22.800
Knock-out (%)	15.000
Web Thickness	0.060

Insulation Tape R-value:

Interior Flange	
Exterior Flange	

List of Construction Components		R-Value
	Outside Surface Air Film	0.170
1.	Asphalt shingle roofing	0.440
2.	Building paper (felt)	0.060
3.	1.50 in polyisocyanurate	10.560
4.	0.50 in Plywood	0.630
5.	0.50 in gypsum or plaster board	0.450
6.		
7.		
	Inside Surface Air Film	0.620

Calculation:

From EZFRAME = $\boxed{0.044}$

Total U-Value

$$\frac{1/0.044}{1\div \text{Total U-Value}} = \underset{\textbf{Total R-Value}}{22.660}$$

Reference Name: R.22.2x4.24

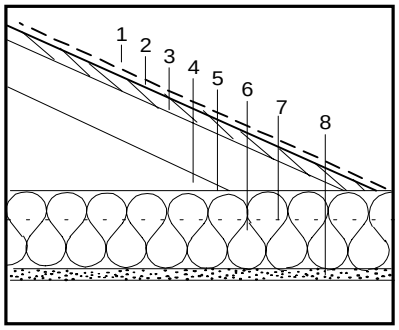

Sketch of Construction Assembly

Assembly Type: (check one)
- ___ Floor
- ___ Wall
- ✓ Ceiling/Roof

Framing Material: Wood

Framing Size: 2 × 4

Framing Spacing: 24 "o.c.

Framing Percentage: (check one)
- Wall: ___ 15% (16"o.c.)
- ___ 12% (24"o.c.)
- ___ 9% (48"o.c.)
- Floor/Ceiling ___ 10% (16"o.c.)
- ✓ 7% (24"o.c.)
- ___ 4% (48"o.c.)

Wall Weight / sf: (Packages only) NA

List of Construction Components		R-Value: Cavity (R_c)	R-Value: Frame (R_f)
	Outside Surface Air Film	0.170	0.170
1.	Asphalt shingle roofing	0.440	0.440
2.	Building paper (felt)	0.060	0.060
3.	0.50 in plywood	0.630	0.630
4.	3.50 in & greater air space	0.800	0.800
5.	R-11 fiberglass insulation	11.000	11.000
6.	R-11 fiberglass insulation	11.000	-----
7.	2x4 in fir framing	-----	3.465
8.	0.50 in gypsum or plaster board	0.450	0.450
	Inside Surface Air Film	0.610	0.610
	Total Unadjusted R-Values:	25.160	17.625
		R_c	R_f

Framing Adjustment Calculation:

$$[(\frac{1/25.160}{1 \div R_c}) \times (\frac{1-7/100}{1-(Fr.\% \div 100)})] + [(\frac{1/17.625}{1 \div R_f}) \times (\frac{7/100}{Fr.\% \div 100})] = \boxed{0.041}$$

Total U-Value

$$\frac{1/0.041}{1 \div \text{Total U-Value}} = 24.390$$

Total R-Value

Reference Name: R.22.S2x4.24

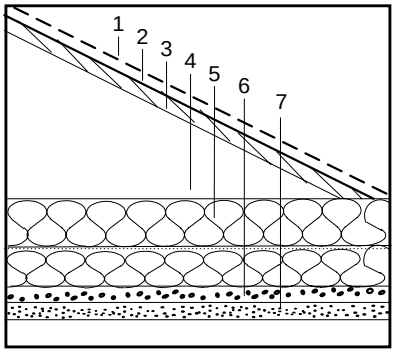

Sketch of Construction Assembly

Assembly Type: (check one)
- ___ Floor
- ___ Wall
- ✓ Ceiling/Roof

Framing Material: Metal

Framing Spacing: 24 "o.c.

Framing Size:
- Actual Depth 3.625
- Actual Width 1.625

Cavity Insulation:
- R-value 11.000
- Knock-out (%) 15.000
- Web Thickness 0.060

Insulation Tape R-value:
- Interior Flange ___
- Exterior Flange ___

List of Construction Components		R-Value
	Outside Surface Air Film	0.170
1.	Asphalt shingle roofing	0.440
2.	Building paper (felt)	0.060
3.	0.50 in plywood	0.630
4.	3.50 in & greater air space	0.800
5.	R-11 fiberglass insulation	11.000
6.	0.75 in Polyisocyanurate	5.280
7.	0.50 in Gypsum Board	0.450
	Inside Surface Air Film	0.610

Calculation:

From EZFRAME = $\boxed{0.039}$

Total U-Value

$$\frac{1/0.039}{1 \div \text{Total U-Value}} = 25.500$$

Total R-Value

Reference Name: RP.22.2x6.48

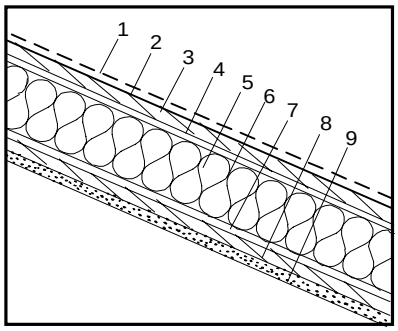

Sketch of Construction Assembly

Assembly Type: (check one)
- ___ Floor
- ___ Wall
- ✓ Ceiling/Roof

Framing Material: Wood

Framing Size: 2 × 6

Framing Spacing: 48 "o.c.

Framing Percentage: (check one)

Wall:	___	15% (16"o.c.)
	___	12% (24"o.c.)
	___	9% (48"o.c.)
Floor/Ceiling	___	10% (16"o.c.)
	___	7% (24"o.c.)
	✓	4% (48"o.c.)

Wall Weight / sf: NA (Packages only)

List of Construction Components		**R-Value** Cavity (R_c)	Frame (R_f)
	Outside Surface Air Film	0.170	0.170
1.	Asphalt shingle roofing	0.440	0.440
2.	Building paper (felt)	0.060	0.060
3.	0.375 in plywood	0.470	0.470
4.	0.875 in furring channel	0.800	0.800
5.	5 5/8 in EPS foam insulation @ R-3.85/inch	21.656	-----
6.	2x6 in fir framing	-----	5.445
7.	0.875 in furring channel	0.800	0.800
8.	0.375 in plywood	0.470	0.470
9.	0.50 in gypsum or plaster board	0.450	0.450
	Inside Surface Air Film	0.620	0.620
	Total Unadjusted R-Values:	25.936 (R_c)	9.725 (R_f)

Framing Adjustment Calculation:

$$[(\underset{1\div R_c}{1/25.936}) \times (\underset{1-(Fr.\%\div 100)}{1-4/100})] + [(\underset{1\div R_f}{1/9.725}) \times (\underset{Fr.\%\div 100}{4/100})] = \boxed{0.041}$$

Total U-Value

$$\underset{1\div \text{Total U-Value}}{1/0.041} = \underset{\textbf{Total R-Value}}{24.390}$$

Reference Name: RP.22.S2x6.48

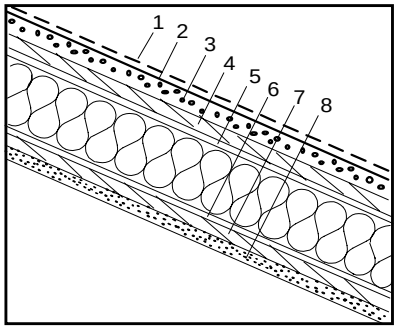

Sketch of Construction Assembly

Assembly Type: (check one)
- ___ Floor
- ___ Wall
- ✓ Ceiling/Roof

Framing Material: Metal

Framing Spacing: 48 "o.c.

Framing Size:
- Actual Depth: 6.000
- Actual Width: 1.625

Cavity Insulation:
- R-value: 22.000
- Knock-out (%): 15.000
- Web Thickness: 0.060

Insulation Tape R-value:
- Interior Flange: ___
- Exterior Flange: ___

List of Construction Components		**R-Value**
	Outside Surface Air Film	0.170
1.	Asphalt shingle roofing	0.440
2.	Building paper (felt)	0.060
3.	1.00 in polyisocyanurate	7.040
4.	0.375 in Plywood	0.470
5.	0.875 in furring channel	0.800
6.	0.875 in furring channel	0.800
7.	0.375 in Plywood	0.470
8.	0.50 in gypsum or plaster board	0.450
	Inside Surface Air Film	0.620

Calculation:

From EZFRAME = **0.039**

Total U-Value

$$\underset{1\div \text{Total U-Value}}{1/0.039} = \underset{\textbf{Total R-Value}}{25.460}$$

Reference Name: RP.28.2x8.48

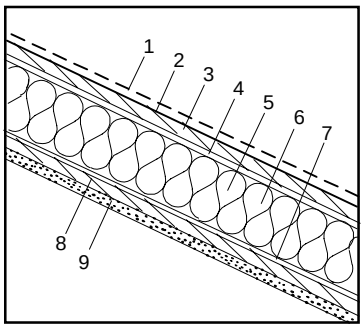

Sketch of Construction Assembly

Assembly Type: (check one)
- ____ Floor
- ____ Wall
- ✓ Ceiling/Roof

Framing Material: Wood

Framing Size: 2 × 8

Framing Spacing: 48 "o.c.

Framing Percentage: (check one)
- Wall: ____ 15% (16"o.c.)
- ____ 12% (24"o.c.)
- ____ 9% (48"o.c.)
- Floor/Ceiling ____ 10% (16"o.c.)
- ____ 7% (24"o.c.)
- ✓ 4% (48"o.c.)

Wall Weight / sf: (Packages only) NA

List of Construction Components		R-Value: Cavity (R_c)	R-Value: Frame (R_f)
	Outside Surface Air Film	0.170	0.170
1.	Asphalt shingle roofing	0.440	0.440
2.	Building paper (felt)	0.060	0.060
3.	0.375 in plywood	0.470	0.470
4.	0.875 in furring channel	0.800	0.800
5.	7 3/8 in EPS foam insulation @ R-3.85/in	28.394	-----
6.	2x8 in fir framing	-----	7.178
7.	0.875 in furring channel	0.800	0.800
8.	0.375 in plywood	0.470	0.470
9.	0.50 in gypsum or plaster board	0.450	0.450
	Inside Surface Air Film	0.620	0.620
	Total Unadjusted R-Values:	32.674	11.458
		R_c	R_f

Framing Adjustment Calculation:

$$[(\frac{1}{32.674}) \times (\frac{1-4}{100})] + [(\frac{1}{11.458}) \times (\frac{4}{100})] = \boxed{0.033}$$

($1 \div R_c$; 1-(Fr.% ÷100); $1 \div R_f$; Fr.% ÷100)

Total U-Value

$$\frac{1}{0.033} = 30.303$$

(1÷Total U-Value) = **Total R-Value**

Reference Name: RP.28.S2x8.48

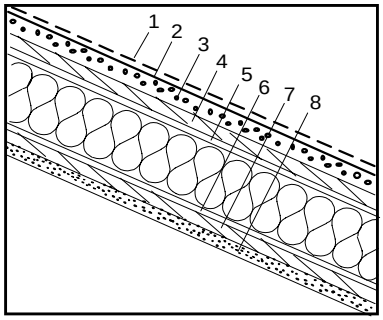

Sketch of Construction Assembly

Assembly Type: (check one)
- ____ Floor
- ____ Wall
- ✓ Ceiling/Roof

Framing Material: Metal

Framing Spacing: 48 "o.c.

Framing Size:
- Actual Depth 8.000
- Actual Width 1.625

Cavity Insulation:
- R-value 28.394
- Knock-out (%) 15.000
- Web Thickness 0.060

Insulation Tape R-value:
- Interior Flange ____
- Exterior Flange ____

List of Construction Components		R-Value
	Outside Surface Air Film	0.170
1.	Asphalt shingle roofing	0.440
2.	Building paper (felt)	0.060
3.	1.75 in polyisocyanurate	12.320
4.	0.375 in Plywood	0.470
5.	0.875 in furring channel	0.800
6.	0.875 in furring channel	0.800
7.	0.375 in Plywood	0.470
8.	0.50 in gypsum or plaster board	0.450
	Inside Surface Air Film	0.620

Calculation:

From EZFRAME = **0.031**

Total U-Value

$$\frac{1}{0.031} = 31.940$$

(1÷Total U-Value) = **Total R-Value**

Reference Name: R.30.2x12.16

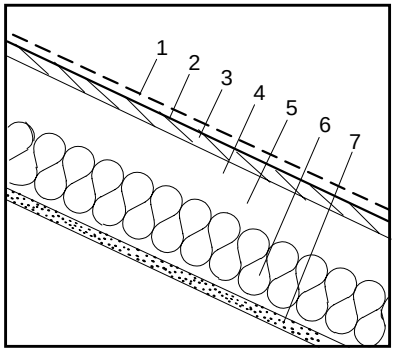

Sketch of Construction Assembly

Assembly Type: (check one)
- ___ Floor
- ___ Wall
- ✓ Ceiling/Roof

Framing Material: Wood

Framing Size: 2 × 12

Framing Spacing: 16 "o.c.

Framing Percentage: (check one)

Wall:	___	15% (16"o.c.)
	___	12% (24"o.c.)
	___	9% (48"o.c.)
Floor/Ceiling	✓	10% (16"o.c.)
	___	7% (24"o.c.)
	___	4% (48"o.c.)

Wall Weight / sf: NA
(Packages only)

List of Construction Components		R-Value: Cavity (R_c)	R-Value: Frame (R_f)
	Outside Surface Air Film	0.170	0.170
1.	Asphalt shingle roofing	0.440	0.440
2.	Building paper (felt)	0.060	0.060
3.	0.50 in plywood	0.630	0.630
4.	1.75 in air space; heat fow up	0.780	-----
5.	2x12 in fir framing	-----	11.138
6.	R-30 fiberglass insulation	30.000	-----
7.	0.50 in gypsum or plaster board	0.450	0.450
	Inside Surface Air Film	0.620	0.620
	Total Unadjusted R-Values:	33.150	13.508
		R_c	R_f

Framing Adjustment Calculation:

$$[(\underset{1\div R_c}{1/33.150}) \times (\underset{1-(Fr.\%\div 100)}{1-10/100})] + [(\underset{1\div R_f}{1/13.508}) \times (\underset{Fr.\%\div 100}{10/100})] = \boxed{0.035}$$

Total U-Value

$$\underset{1\div \text{Total U-Value}}{1/0.035} = \underset{\text{Total R-Value}}{28.571}$$

Reference Name: R.30.S2x12.16

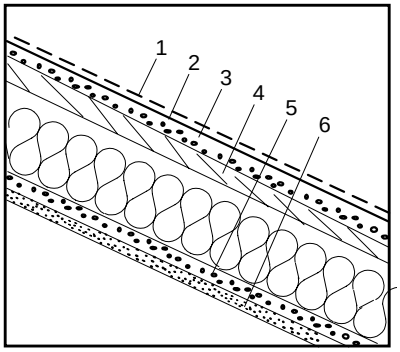

Sketch of Construction Assembly

Assembly Type: (check one)
- ___ Floor
- ___ Wall
- ✓ Ceiling/Roof

Framing Material: Metal

Framing Spacing: 16 "o.c.

Framing Size:
- Actual Depth: 12.000
- Actual Width: 1.625

Cavity Insulation:
- R-value: 30.800
- Knock-out (%): 15.000
- Web Thickness: 0.060

Insulation Tape R-value:
- Interior Flange: ___
- Exterior Flange: ___

List of Construction Components		R-Value
	Outside Surface Air Film	0.170
1.	Asphalt shingle roofing	0.440
2.	Building Paper	0.060
3.	1.50 in Polyisocyanurate	10.56
4.	0.50 in plywood	0.630
5.	1.00 in Polyisocyanurate	7.04
6.	0.50 in gypsum or plaster board	0.450
7.		
	Inside Surface Air Film	0.620

Calculation:

From EZFRAME = **0.032**

Total U-Value

Reference Name: R.30.2x10.16

$$\underset{1\div \text{Total U-Value}}{1/0.032} = \underset{\text{Total R-Value}}{31.64}$$

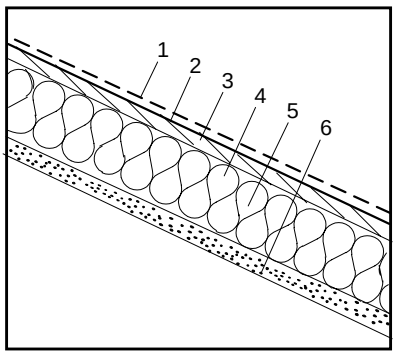

Sketch of Construction Assembly

Assembly Type: (check one)
- ___ Floor
- ___ Wall
- ✓ Ceiling/Roof

Framing Material: Wood

Framing Size: 2 × 10

Framing Spacing: 16 "o.c.

Framing Percentage: (check one)

Wall:	___	15% (16"o.c.)
	___	12% (24"o.c.)
	___	9% (48"o.c.)
Floor/Ceiling	✓	10% (16"o.c.)
	___	7% (24"o.c.)
	___	4% (48"o.c.)

Wall Weight / sf: NA
(Packages only)

List of Construction Components		R-Value: Cavity (R_c)	R-Value: Frame (R_f)
	Outside Surface Air Film	0.170	0.170
1.	Asphalt shingle roofing	0.440	0.440
2.	Building paper (felt)	0.060	0.060
3.	0.50 in plywood	0.630	0.630
4.	2x10 in fir framing	-----	9.158
5.	R-30 fiberglass insulation (8.5'' thkns)	30.000	-----
6.	0.50 in gypsum or plaster board	0.450	0.450
7.			
	Inside Surface Air Film	0.620	0.620
	Total Unadjusted R-Values:	32.370 (R_c)	11.528 (R_f)

Framing Adjustment Calculation:

$$[(\frac{1/32.370}{1 \div R_c}) \times (\frac{1-10/100}{1-(Fr.\% \div 100)})] + [(\frac{1/11.528}{1 \div R_f}) \times (\frac{10/100}{Fr.\% \div 100})] = \boxed{0.036}$$

Total U-Value

$$\frac{1/0.036}{1 \div \text{Total U-Value}} = 27.778$$

Total R-Value

Reference Name: R.30.S2x10.16

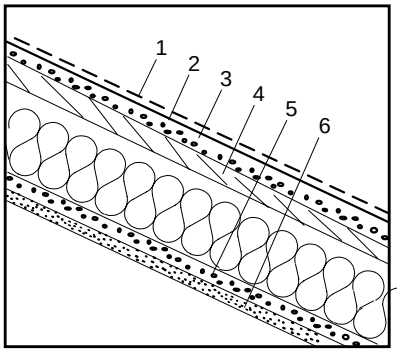

Sketch of Construction Assembly

Assembly Type: (check one)
- ___ Floor
- ___ Wall
- ✓ Ceiling/Roof

Framing Material: Metal

Framing Spacing: 16 "o.c.

Framing Size:
- Actual Depth: 10.000
- Actual Width: 1.625

Cavity Insulation:
- R-value: 30.800
- Knock-out (%): 15.000
- Web Thickness: 0.060

Insulation Tape R-value:
- Interior Flange: ___
- Exterior Flange: ___

List of Construction Components		R-Value
	Outside Surface Air Film	0.170
1.	Asphalt shingle roofing	0.440
2.	Building Paper	0.060
3.	1.50 in Polyisocyanurate	10.560
4.	0.50 in plywood	0.630
5.	0.75 in Polyisocyanurate	5.280
6.	0.50 in gypsum or plaster board	0.450
7.		
	Inside Surface Air Film	0.620

Calculation:

From EZFRAME = **0.034**

Total U-Value

Reference Name: R.30.2x4.24

$$\frac{1/0.034}{1 \div \text{Total U-Value}} = 29.220$$

Total R-Value

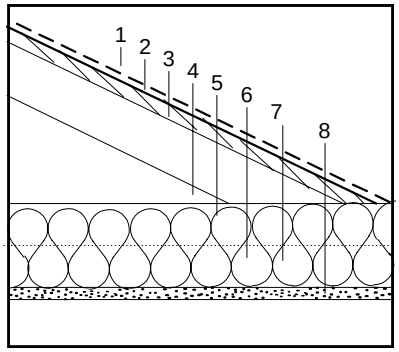

Sketch of Construction Assembly

Assembly Type: (check one)
- ___ Floor
- ___ Wall
- ✓ Ceiling/Roof

Framing Material: Wood

Framing Size: 2 × 4

Framing Spacing: 24 "o.c.

Framing Percentage: (check one)
- Wall: ___ 15% (16"o.c.)
- ___ 12% (24"o.c.)
- ___ 9% (48"o.c.)
- Floor/Ceiling ___ 10% (16"o.c.)
- ✓ 7% (24"o.c.)
- ___ 4% (48"o.c.)

Wall Weight / sf: NA (Packages only)

List of Construction Components		R-Value: Cavity (R_c)	R-Value: Frame (R_f)
	Outside Surface Air Film	0.170	0.170
1.	Asphalt shingle roofing	0.440	0.440
2.	Building paper (felt)	0.060	0.060
3.	0.50 in plywood	0.630	0.630
4.	3.50 in & greater air space	0.800	0.800
5.	R-19 fiberglass insulation	19.000	19.000
6.	R-11 fiberglass insulation	11.000	-----
7.	2X4 in fir framing	-----	3.465
8.	0.50 in gypsum or plaster board	0.450	0.450
	Inside Surface Air Film	0.610	0.610
	Total Unadjusted R-Values:	33.160	25.625
		R_c	R_f

Framing Adjustment Calculation:

$$[(\frac{1}{33.160}) \times (\frac{1-7}{100})] + [(\frac{1}{25.625}) \times (\frac{7}{100})] = 0.031$$

($1 \div R_c$; 1-(Fr.% ÷100); $1 \div R_f$; Fr.% ÷100)

Total U-Value

$$\frac{1}{0.031} = 32.258$$

(1÷Total U-Value)

Total R-Value

Reference Name: R.30.S2x4.24

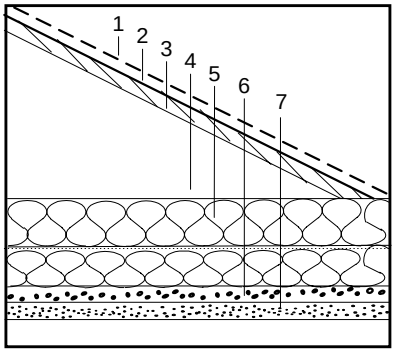

Sketch of Construction Assembly

Assembly Type: (check one)
- ___ Floor
- ___ Wall
- ✓ Ceiling/Roof

Framing Material: Metal

Framing Spacing: 24 "o.c.

Framing Size:
- Actual Depth: 3.625
- Actual Width: 1.625

Cavity Insulation:
- R-value: 11.000
- Knock-out (%): 15.000
- Web Thickness: 0.060

Insulation Tape R-value:
- Interior Flange: ___
- Exterior Flange: ___

List of Construction Components		R-Value
	Outside Surface Air Film	0.170
1.	Asphalt shingle roofing	0.440
2.	Building paper (felt)	0.060
3.	0.50 in plywood	0.630
4.	3.50 in & greater air space	0.800
5.	R-19 fiberglass insulation	19.000
6.	0.75 in Polyisocyanurate	5.280
7.	0.50 in Gypsum Board	0.450
	Inside Surface Air Film	0.610

Calculation:

From EZFRAME = **0.030**

Total U-Value

$$\frac{1}{0.030} = 33.52$$

(1÷Total U-Value)

Total R-Value

Reference Name: RP.35.2x10.48

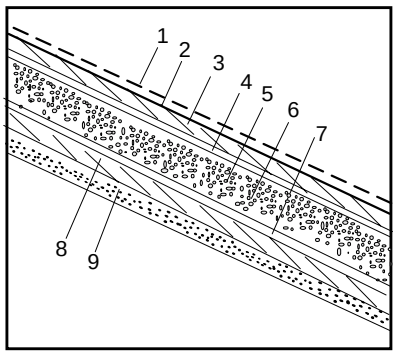

Sketch of Construction Assembly

Assembly Type: (check one)
- ____ Floor
- ____ Wall
- ✓ Ceiling/Roof

Framing Material: Wood

Framing Size: 2 × 10

Framing Spacing: 48 "o.c.

Framing Percentage: (check one)
- Wall: ____ 15% (16"o.c.)
- ____ 12% (24"o.c.)
- ____ 9% (48"o.c.)
- Floor/Ceiling ____ 10% (16"o.c.)
- ____ 7% (24"o.c.)
- ✓ 4% (48"o.c.)

Wall Weight / sf: (Packages only) NA

List of Construction Components		R-Value: Cavity (R_c)	R-Value: Frame (R_f)
	Outside Surface Air Film	0.170	0.170
1.	Asphalt shingle roofing	0.440	0.440
2.	Building paper (felt)	0.060	0.060
3.	0.375 in plywood	0.470	0.470
4.	0.875 furring channel	0.800	0.800
5.	4 in EPS foam insulation	35.000	-----
6.	2x10 in fir framing	-----	9.158
7.	0.875 furring channel	0.800	0.800
8.	0.375 in plywood	0.470	0.470
9.	0.50 in gypsum or plaster board	0.450	0.450
	Inside Surface Air Film	0.620	0.620
	Total Unadjusted R-Values:	39.280	13.438
		R_c	R_f

Framing Adjustment Calculation:

$$[(1/39.280) \times (1-4/100)] + [(1/13.438) \times (4/100)] = 0.027$$

($1 \div R_c$; 1-(Fr.% ÷100); $1 \div R_f$; Fr.% ÷100)

Total U-Value

$$\frac{1/0.027}{1 \div \text{Total U-Value}} = 37.037$$

Total R-Value

Reference Name: RP.35.S2x10.48

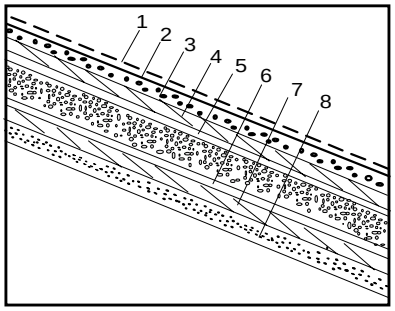

Sketch of Construction Assembly

Assembly Type: (check one)
- ____ Floor
- ____ Wall
- ✓ Ceiling/Roof

Framing Material: Metal

Framing Spacing: 48 "o.c.

Framing Size:
- Actual Depth 10.000
- Actual Width 1.625

Cavity Insulation:
- R-value 35.000
- Knock-out (%) 15.000
- Web Thickness 0.060

Insulation Tape R-value:
- Interior Flange ____
- Exterior Flange ____

List of Construction Components		R-Value
	Outside Surface Air Film	0.170
1.	Asphalt shingle roofing	0.440
2.	Building paper (felt)	0.060
3.	2.25 in polyisocyanurate	15.840
4.	0.375 in plywood	0.470
5.	0.875 in furring channel	0.800
6.	0.875 in furring channel	0.800
7.	0.375 in plywood	0.470
8.	0.50 in gypsum or plaster board	0.450
	Inside Surface Air Film	0.620

Calculation:

From EZFRAME = **0.026**

Total U-Value

$$\frac{1/0.026}{1 \div \text{Total U-Value}} = 38.44$$

Total R-Value

Reference Name: R.38.2x14.16

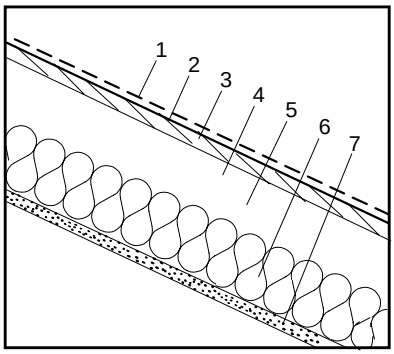

Sketch of Construction Assembly

Assembly Type: (check one)
- ___ Floor
- ___ Wall
- ✓ Ceiling/Roof

Framing Material: Wood

Framing Size: 2 × 14

Framing Spacing: 16 "o.c.

Framing Percentage: (check one)

Wall:	___	15% (16"o.c.)
	___	12% (24"o.c.)
	___	9% (48"o.c.)
Floor/Ceiling	✓	10% (16"o.c.)
	___	7% (24"o.c.)
	___	4% (48"o.c.)

Wall Weight / sf: NA
(Packages only)

List of Construction Components		R-Value: Cavity (R_c)	R-Value: Frame (R_f)
	Outside Surface Air Film	0.170	0.170
1.	Asphalt shingle roofing	0.440	0.440
2.	Building paper (felt)	0.060	0.060
3.	0.50 in plywood	0.630	0.630
4.	1.25 in air space; heat flow up	0.760	-----
5.	2x14 in fir framing	-----	13.118
6.	R-38 fiberglass insulation	38.000	-----
7.	0.50 in gypsum or plaster board	0.450	0.450
	Inside Surface Air Film	0.620	0.620
	Total Unadjusted R-Values:	41.130	15.488
		R_c	R_f

Framing Adjustment Calculation:

$$[(\frac{1}{1 \div R_c}) \times (\frac{1-10/100}{1-(Fr.\% \div 100)})] + [(\frac{1}{1 \div R_f}) \times (\frac{10/100}{Fr.\% \div 100})] = \boxed{0.028}$$

Total U-Value

$$\frac{1/0.028}{1 \div \text{Total U-Value}} = 35.714$$

Total R-Value

Reference Name: R.38.S2x14.16

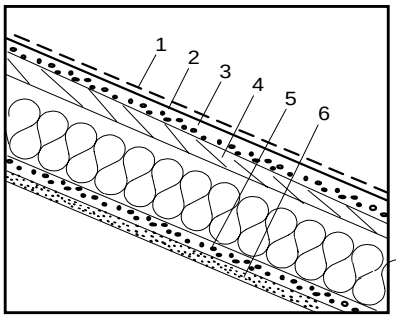

Sketch of Construction Assembly

Assembly Type: (check one)
- ___ Floor
- ___ Wall
- ✓ Ceiling/Roof

Framing Material: Metal

Framing Spacing: 16 "o.c.

Framing Size:
- Actual Depth: 14.000
- Actual Width: 1.625

Cavity Insulation:
- R-value: 38.800
- Knock-out (%): 15.000
- Web Thickness: 0.060

Insulation Tape R-value:
- Interior Flange: ___
- Exterior Flange: ___

List of Construction Components		R-Value
	Outside Surface Air Film	0.170
1.	Asphalt shingle roofing	0.440
2.	Building paper (felt)	0.060
3.	1.50 in Polyisocyanurate	10.560
4.	0.50 in Plywood	0.630
5.	1.50 in Polyisocyanurate	10.560
6.	0.50 in gypsum or plaster board	0.450
7.		
	Inside Surface Air Film	0.620

Calculation:

From EZFRAME = $\boxed{0.027}$

Total U-Value

$$\frac{1/0.027}{1 \div \text{Total U-Value}} = 36.95$$

Total R-Value

Reference Name: R.38.2x12.16

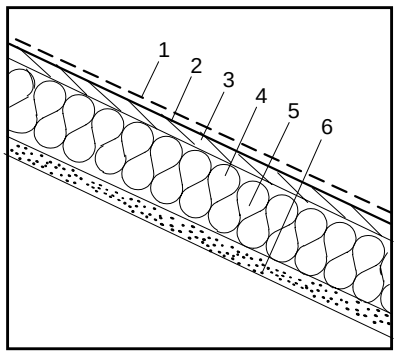

Sketch of Construction Assembly

Assembly Type: (check one)
- ____ Floor
- ____ Wall
- ✓ Ceiling/Roof

Framing Material: Wood

Framing Size: 2 × 12

Framing Spacing: 16 "o.c.

Framing Percentage: (check one)

Wall:	____	15% (16"o.c.)
	____	12% (24"o.c.)
	____	9% (48"o.c.)
Floor/Ceiling	✓	10% (16"o.c.)
	____	7% (24"o.c.)
	____	4% (48"o.c.)

Wall Weight / sf: (Packages only) NA

List of Construction Components		**R-Value** Cavity (R_c)	**R-Value** Frame (R_f)
	Outside Surface Air Film	0.170	0.170
1.	Asphalt shingle roofing	0.440	0.440
2.	Building paper (felt)	0.060	0.060
3.	0.50 in plywood	0.630	0.630
4.	2x12 in fir framing	-----	11.138
5.	R-38 fiberglass insulation	38.000	-----
6.	0.50 in gypsum or plaster board	0.450	0.450
7.			
	Inside Surface Air Film	0.620	0.620
	Total Unadjusted R-Values:	40.370	13.508
		R_c	R_f

Framing Adjustment Calculation:

$$[(\underset{1\div R_c}{1/40.370}) \times (\underset{1-(Fr.\%\div 100)}{1-10/100})] + [(\underset{1\div R_f}{1/13.508}) \times (\underset{Fr.\%\div 100}{10/100})] = \boxed{0.030}$$

Total U-Value

$$\frac{1/0.030}{1\div \text{Total U-Value}} = 33.333$$

Total R-Value

Reference Name: R.38.S2x12.16

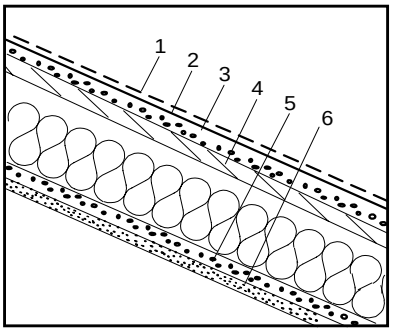

Sketch of Construction Assembly

Assembly Type: (check one)
- ____ Floor
- ____ Wall
- ✓ Ceiling/Roof

Framing Material: Metal

Framing Spacing: 16 "o.c.

Framing Size:
- Actual Depth: 12.000
- Actual Width: 1.625

Cavity Insulation:
- R-value: 38.800
- Knock-out (%): 15.000
- Web Thickness: 0.060

Insulation Tape R-value:
- Interior Flange: ____
- Exterior Flange: ____

List of Construction Components		**R-Value**
	Outside Surface Air Film	0.170
1.	Asphalt shingle roofing	0.440
2.	Building paper (felt)	0.060
3.	1.50 in polyisocyanurate	10.560
4.	0.625 in plywood	0.780
5.	1.00 in polyisocyanurate	7.040
6.	0.625 in gypsum or plaster board	0.560
7.		
	Inside Surface Air Film	0.620

Calculation:

From EZFRAME = **0.030**

Total U-Value

$$\frac{1/0.030}{1\div \text{Total U-Value}} = 33.38$$

Total R-Value

Reference Name: R.38.2x4.24

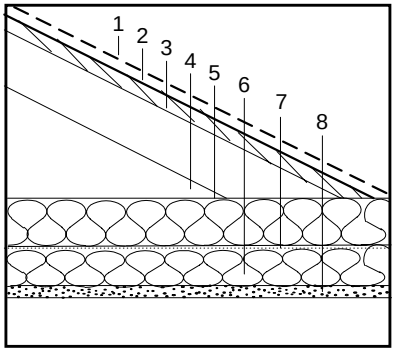

Sketch of Construction Assembly

Assembly Type: (check one)
- ___ Floor
- ___ Wall
- ✓ Ceiling/Roof

Framing Material: Wood

Framing Size: 2 × 4

Framing Spacing: 24 "o.c.

Framing Percentage: (check one)
- Wall: ___ 15% (16"o.c.)
- ___ 12% (24"o.c.)
- ___ 9% (48"o.c.)
- Floor/Ceiling ___ 10% (16"o.c.)
- ✓ 7% (24"o.c.)
- ___ 4% (48"o.c.)

Wall Weight / sf: (Packages only) NA

List of Construction Components		R-Value: Cavity (R_c)	R-Value: Frame (R_f)
	Outside Surface Air Film	0.170	0.170
1.	Asphalt shingle roofing	0.440	0.440
2.	Building paper (felt)	0.060	0.060
3.	0.50 in plywood	0.630	0.630
4.	3.50 in & greater air space; heat flow up	0.800	0.800
5.	R-27 fiberglass insulation	27.000	27.000
6.	R-11 fiberglass insulation	11.000	-----
7.	2x4 in fir framing	-----	3.465
8.	0.50 in gypsum or plaster board	0.450	0.450
	Inside Surface Air Film	0.610	0.610
	Total Unadjusted R-Values:	41.160	33.625
		R_c	R_f

Framing Adjustment Calculation:

$$[(\underset{1 \div R_c}{1/41.160}) \times (\underset{1-(Fr.\% \div 100)}{1-7/100})] + [(\underset{1 \div R_f}{1/33.625}) \times (\underset{Fr.\% \div 100}{7/100})] = \boxed{0.025}$$

Total U-Value

$$\frac{1/0.025}{1 \div \text{Total U-Value}} = 40.000$$

Total R-Value

Reference Name: R.38.S2x4.24

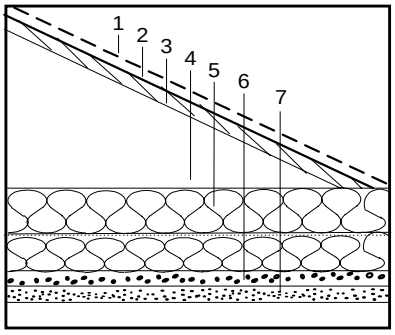

Sketch of Construction Assembly

Assembly Type: (check one)
- ___ Floor
- ___ Wall
- ✓ Ceiling/Roof

Framing Material: Metal

Framing Spacing: 24 "o.c.

Framing Size:
- Actual Depth 3.625
- Actual Width 1.625

Cavity Insulation:
- R-value 11.000
- Knock-out (%) 15.000
- Web Thickness 0.060

Insulation Tape R-value:
- Interior Flange ___
- Exterior Flange ___

List of Construction Components		R-Value
	Outside Surface Air Film	0.170
1.	Asphalt shingle roofing	0.440
2.	Building paper (felt)	0.060
3.	0.50 in Plywood	0.630
4.	3.50 in & greater air space; heat flow up	0.800
5.	R-27 fiberglass insulation	27.000
6.	1.00 in polyisocyanurate	7.040
7.	0.50 in gypsum or plaster board	0.450
	Inside Surface Air Film	0.610

Calculation:

From EZFRAME = $\boxed{0.023}$

Total U-Value

$$\frac{1/0.023}{1 \div \text{Total U-Value}} = 43.25$$

Total R-Value

Reference Name: R.49.2x4.16

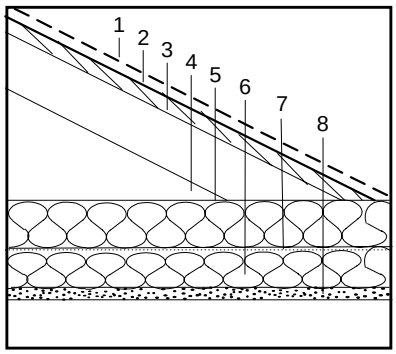

Sketch of Construction Assembly

Assembly Type: (check one)
- ___ Floor
- ___ Wall
- ✓ Ceiling/Roof

Framing Material: Wood

Framing Size: 2 × 4

Framing Spacing: 16 "o.c.

Framing Percentage: (check one)

Wall:	___	15% (16"o.c.)
	___	12% (24"o.c.)
	___	9% (48"o.c.)
Floor/Ceiling	✓	10% (16"o.c.)
	___	7% (24"o.c.)
	___	4% (48"o.c.)

Wall Weight / sf: (Packages only) NA

List of Construction Components		R-Value: Cavity (R_c)	R-Value: Frame (R_f)
	Outside Surface Air Film	0.170	0.170
1.	Asphalt shingle roofing	0.440	0.440
2.	Building paper (felt)	0.060	0.060
3.	0.50 in plywood	0.630	0.630
4.	3.50 in & greater air space; heat flow up	0.800	0.800
5.	R-38 fiberglass insulation	38.000	38.000
6.	R-11 fiberglass insulation	11.000	-----
7.	2x4 in fir framing	-----	3.465
8.	0.50 in gypsum or plaster board	0.450	0.450
	Inside Surface Air Film	0.610	0.610
	Total Unadjusted R-Values:	52.160	44.625
		R_c	R_f

Framing Adjustment Calculation:

$$[(\underset{1\div R_c}{1/52.160}) \times (\underset{1-(Fr.\%\div 100)}{1-10/100})] + [(\underset{1\div R_f}{1/44.625}) \times (\underset{Fr.\%\div 100}{10/100})] = \boxed{0.019}$$

Total U-Value

$$\underset{1\div \text{Total U-Value}}{1/0.019} = 52.632$$

Total R-Value

Reference Name: R.49.S2x4.16

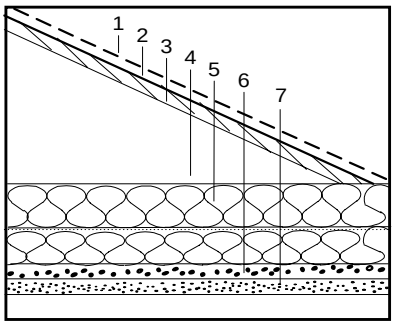

Sketch of Construction Assembly

Assembly Type: (check one)
- ___ Floor
- ___ Wall
- ✓ Ceiling/Roof

Framing Material: Metal

Framing Spacing: 16 "o.c.

Framing Size:
- Actual Depth: 3.625
- Actual Width: 1.625

Cavity Insulation:
- R-value: 11.000
- Knock-out (%): 15.000
- Web Thickness: 0.060

Insulation Tape R-value:
- Interior Flange: ___
- Exterior Flange: ___

List of Construction Components		R-Value
	Outside Surface Air Film	0.170
1.	Asphalt shingle roofing	0.440
2.	Building paper (felt)	0.060
3.	0.50 in plywood	0.630
4.	3.50 in air space	0.800
5.	R-38 fiberglass insulation	38.000
6.	1.00 in polyisocyanurate	7.040
7.	0.50 in gypsum or plaster board	0.450
	Inside Surface Air Film	0.610

Calculation:

From EZFRAME = $\boxed{0.019}$

Total U-Value

$$\underset{1\div \text{Total U-Value}}{1/0.019} = 53.02$$

Total R-Value

Reference Name: R.49.2x4.24

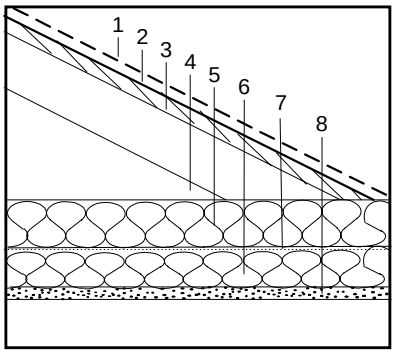

Sketch of Construction Assembly

Assembly Type: (check one)
- ___ Floor
- ___ Wall
- ✓ Ceiling/Roof

Framing Material: Wood

Framing Size: 2 × 4

Framing Spacing: 24 "o.c.

Framing Percentage: (check one)

Wall:	___	15% (16"o.c.)
	___	12% (24"o.c.)
	___	9% (48"o.c.)
Floor/Ceiling	___	10% (16"o.c.)
	✓	7% (24"o.c.)
	___	4% (48"o.c.)

Wall Weight / sf: NA
(Packages only)

List of Construction Components		R-Value: Cavity (R_c)	R-Value: Frame (R_f)
	Outside Surface Air Film	0.170	0.170
1.	Asphalt shingle roofing	0.440	0.440
2.	Building paper (felt)	0.060	0.060
3.	0.50 in plywood	0.630	0.630
4.	3.50 in & greater air space; heat flow up	0.800	0.800
5.	R-38 fiberglass insulation	38.000	38.000
6.	R-11 fiberglass insulation	11.000	-----
7.	2x4 in fir framing	-----	3.465
8.	0.50 in gypsum or plaster board	0.450	0.450
	Inside Surface Air Film	0.610	0.610
	Total Unadjusted R-Values:	52.160	44.625
		R_c	R_f

Framing Adjustment Calculation:

$$[(\underset{1\div R_c}{1/52.160}) \times (\underset{1-(Fr.\%\div 100)}{1-7/100})] + [(\underset{1\div R_f}{1/44.625}) \times (\underset{Fr.\%\div 100}{7/100})] = \boxed{0.019}$$

Total U-Value

$$\underset{1\div \text{Total U-Value}}{1/0.019} = \underset{\text{Total R-Value}}{52.632}$$

Reference Name: R.49.S2x4.24

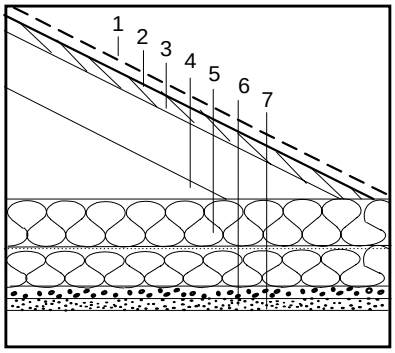

Sketch of Construction Assembly

Assembly Type: (check one)
- ___ Floor
- ___ Wall
- ✓ Ceiling/Roof

Framing Material: Metal

Framing Spacing: 24 "o.c.

Framing Size:
- Actual Depth: 3.625
- Actual Width: 1.625

Cavity Insulation:
- R-value: 11.000
- Knock-out (%): 15.000
- Web Thickness: 0.060

Insulation Tape R-value:
- Interior Flange: ___
- Exterior Flange: ___

List of Construction Components		R-Value
	Outside Surface Air Film	0.170
1.	Asphalt shingle roofing	0.440
2.	Building paper (felt)	0.060
3.	0.50 in Plywood	0.630
4.	3.50 in & greater air space; heat flow up	0.800
5.	R-38 fiberglass insulation	38.000
6.	0.25 in Polyisocyanurate	1.760
7.	0.75 in gypsum or plaster board	0.680
	Inside Surface Air Film	0.610

Calculation:

From EZFRAME = **0.018**

Total U-Value

$$\underset{1\div \text{Total U-Value}}{1/0.018} = \underset{\text{Total R-Value}}{54.250}$$

Reference Name: FC.0.2x6.16

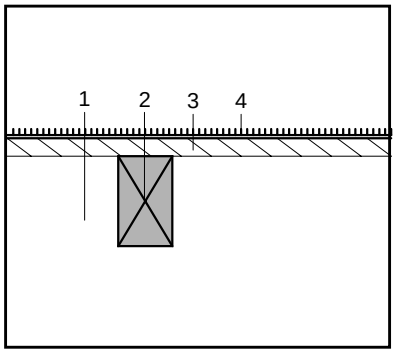

Sketch of Construction Assembly

Assembly Type: (check one)
- ✓ Floor
- Wall
- Ceiling/Roof

Framing Material: Wood

Framing Size: 2 × 6

Framing Spacing: 16 "o.c.

Framing Percentage: (check one)

Wall:		15% (16"o.c.)
		12% (24"o.c.)
		9% (48"o.c.)
Floor/Ceiling	✓	10% (16"o.c.)
		7% (24"o.c.)
		4% (48"o.c.)

Wall Weight / sf: (Packages only) NA

List of Construction Components		**R-Value** Cavity (R_c)	**R-Value** Frame (R_f)
	Outside Surface Air Film	0.170	0.170
1.	Effective R-value of vented crawlspace	6.000	6.000
2.	2x6 in fir framing	-----	5.445
3.	0.625 in plywood	0.780	0.780
4.	Carpet & Pad	2.080	2.080
5.			
6.			
7.			
	Inside Surface Air Film	0.920	0.920
	Total Unadjusted R-Values:	9.950	15.395
		R_c	R_f

Framing Adjustment Calculation:

$$\left[\left(\frac{1/9.950}{1 \div R_c}\right) \times \left(\frac{1-10/100}{1-(Fr.\% \div 100)}\right)\right] + \left[\left(\frac{1/15.395}{1 \div R_f}\right) \times \left(\frac{10/100}{Fr.\% \div 100}\right)\right] = \boxed{0.097}$$

Total U-Value

$$\frac{1/0.097}{1 \div \text{Total U-Value}} = 10.309$$

Total R-Value

Reference Name: FC.0.S2x6.16

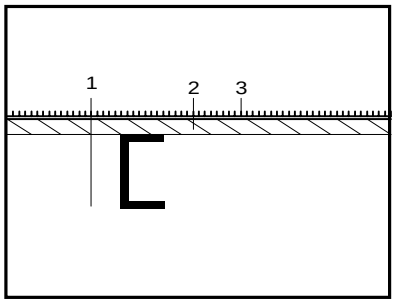

Sketch of Construction Assembly

Assembly Type: (check one)
- ✓ Floor
- Wall
- Ceiling/Roof

Framing Material: Metal

Framing Spacing: 16 "o.c.

Framing Size:
- Actual Depth: 6.000
- Actual Width: 1.625

Cavity Insulation:
- R-value: 0.800
- Knock-out (%): 15.000
- Web Thickness: 0.060

Insulation Tape R-value:
- Interior Flange:
- Exterior Flange:

List of Construction Components		**R-Value**
	Outside Surface Air Film	0.170
1.	Effective R-value of vented crawlspace	6.000
2.	0.625 in plywood	0.780
3.	Carpet & Pad	2.080
4.		
5.		
6.		
7.		
	Inside Surface Air Film	0.920

Calculation:

From EZFRAME = $\boxed{0.094}$

Total U-Value

$$\frac{1/0.094}{1 \div \text{Total U-Value}} = 10.680$$

Total R-Value

Reference Name: FX.0.2x6.16

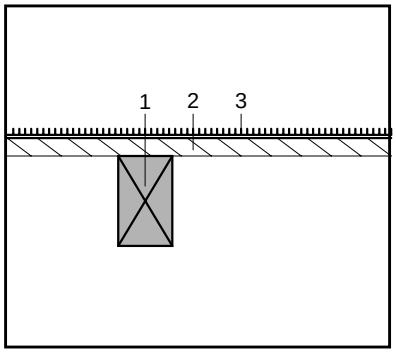

Sketch of Construction Assembly

Assembly Type: (check one)
- ✓ Floor
- Wall
- Ceiling/Roof

Framing Material: Wood

Framing Size: 2 × 6

Framing Spacing: 16 "o.c.

Framing Percentage: (check one)

Wall:		15% (16"o.c.)
		12% (24"o.c.)
		9% (48"o.c.)
Floor/Ceiling	✓	10% (16"o.c.)
		7% (24"o.c.)
		4% (48"o.c.)

Wall Weight / sf: NA
(Packages only)

List of Construction Components		R-Value: Cavity (R_c)	R-Value: Frame (R_f)
	Outside Surface Air Film	0.170	0.170
1.	2x6 in fir framing	-----	5.445
2.	0.625 in plywood	0.780	0.780
3.	Carpet & Pad	2.080	2.080
4.			
5.			
6.			
7.			
	Inside Surface Air Film	0.920	0.920
	Total Unadjusted R-Values:	3.950	9.395
		R_c	R_f

Framing Adjustment Calculation:

[(1/3.950) × (1-10/100)] + [(1/9.395) × (10/100)] = **0.238**

($1 \div R_c$) (1-(Fr.% ÷100)) ($1 \div R_f$) (Fr.% ÷100) — **Total U-Value**

1/0.238 (1÷Total U-Value) = 4.202 **Total R-Value**

Reference Name: FX.0.S2x6.16

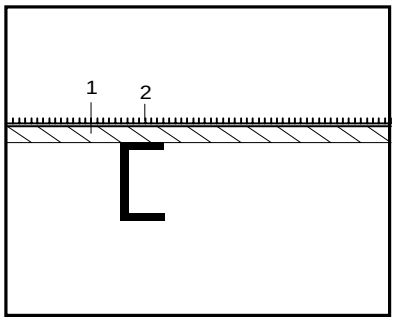

Sketch of Construction Assembly

Assembly Type: (check one)
- ✓ Floor
- Wall
- Ceiling/Roof

Framing Material: Metal

Framing Spacing: 16 "o.c.

Framing Size:
- Actual Depth: 6.000
- Actual Width: 1.625

Cavity Insulation:
- R-value: 0.800
- Knock-out (%): 15.000
- Web Thickness: 0.060

Insulation Tape R-value:
- Interior Flange:
- Exterior Flange:

List of Construction Components		R-Value
	Outside Surface Air Film	0.170
1.	0.625 in plywood	0.780
2.	Carpet & pad	2.080
3.		
4.		
5.		
6.		
7.		
	Inside Surface Air Film	0.920

Calculation:

From EZFRAME = **0.253** **Total U-Value**

1/0.253 (1÷Total U-Value) = 3.950 **Total R-Value**

Reference Name: FC.11.2x6.16

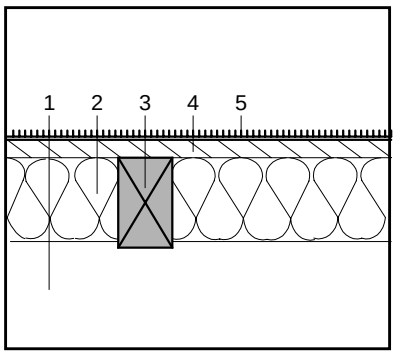

Sketch of Construction Assembly

Assembly Type: (check one)	✓	Floor	
		Wall	
		Ceiling/Roof	
Framing Material:	Wood		
Framing Size:	2 × 6		
Framing Spacing:	16	"o.c.	
Framing Percentage: (check one)	Wall:		15% (16"o.c.)
			12% (24"o.c.)
			9% (48"o.c.)
	Floor/Ceiling	✓	10% (16"o.c.)
			7% (24"o.c.)
			4% (48"o.c.)
Wall Weight / sf: (Packages only)	NA		

List of Construction Components		**R-Value** Cavity (R_c)	Frame (R_f)
	Outside Surface Air Film	0.170	0.170
1.	Effective R-value of vented crawlspace	6.000	6.000
2.	R-11 fiberglass insulation	11.000	-----
3.	2x6 in fir framing	-----	5.445
4.	0.625 in plywood	0.780	0.780
5.	Carpet & pad	2.080	2.080
6.			
7.			
	Inside Surface Air Film	0.920	0.920
	Total Unadjusted R-Values:	20.950	15.395
		R_c	R_f

Framing Adjustment Calculation:

$$[(\frac{1/20.950}{1 \div R_c}) \times (\frac{1-10/100}{1-(Fr.\% \div 100)})] + [(\frac{1/15.395}{1 \div R_f}) \times (\frac{10/100}{Fr.\% \div 100})] = \boxed{0.049}$$

Total U-Value

$$\frac{1/0.049}{1 \div \text{Total U-Value}} = 20.408$$

Total R-Value

Reference Name: FC.11.S2x6.16

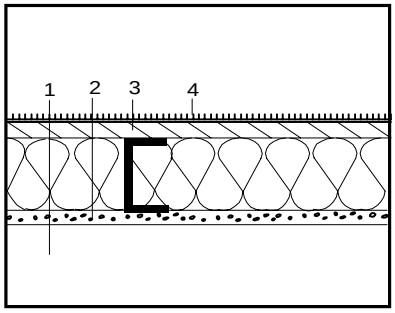

Sketch of Construction Assembly

Assembly Type: (check one)	✓	Floor	
		Wall	
		Ceiling/Roof	
Framing Material:	Metal		
Framing Spacing:	16	"o.c.	
Framing Size:	Actual Depth	6.000	
	Actual Width	1.625	
Cavity Insulation:	R-value	11.000	
	Knock-out (%)	15.000	
	Web Thickness	0.060	
Insulation Tape R-value:	Interior Flange		
	Exterior Flange		

List of Construction Components		**R-Value**
	Outside Surface Air Film	0.170
1.	Effective R-value of vented crawlspace	6.000
2.	0.75 in polyisocyanurate	5.280
3.	0.625 in plywood	0.780
4.	Carpet & pad	2.080
5.		
6.		
7.		
	Inside Surface Air Film	0.920

Calculation:

From EZFRAME = **0.048**

Total U-Value

$$\frac{1/0.048}{1 \div \text{Total U-Value}} = 21.030$$

Total R-Value

Reference Name: FX.11.2x6.16

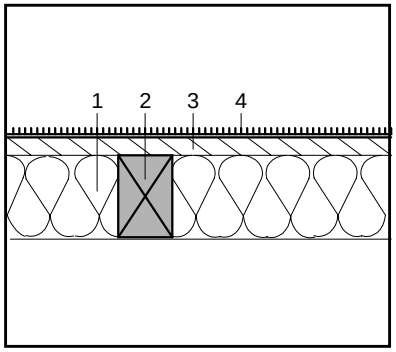

Sketch of Construction Assembly

Assembly Type: (check one)
- ✓ Floor
- Wall
- Ceiling/Roof

Framing Material: Wood

Framing Size: 2 × 6

Framing Spacing: 16 "o.c.

Framing Percentage: (check one)

Wall:		15% (16"o.c.)
		12% (24"o.c.)
		9% (48"o.c.)
Floor/Ceiling	✓	10% (16"o.c.)
		7% (24"o.c.)
		4% (48"o.c.)

Wall Weight / sf: NA (Packages only)

List of Construction Components		R-Value: Cavity (R_c)	R-Value: Frame (R_f)
	Outside Surface Air Film	0.170	0.170
1.	R-11 fiberglass insulation	11.000	-----
2.	2x6 in fir framing	-----	5.445
3.	0.625 in plywood	0.780	0.780
4.	Carpet & pad	2.080	2.080
5.			
6.			
7.			
	Inside Surface Air Film	0.920	0.920
	Total Unadjusted R-Values:	14.940	9.395
		R_c	R_f

Framing Adjustment Calculation:

$$[(\underbrace{1/14.950}_{1\div R_c}) \times (\underbrace{1-10/100}_{1-(Fr.\%\div 100)})] + [(\underbrace{1/9.395}_{1\div R_f}) \times (\underbrace{10/100}_{Fr.\%\div 100})] = \boxed{0.071}$$

Total U-Value

$$\underbrace{1/0.071}_{1\div \text{Total U-Value}} = 14.085$$

Total R-Value

Reference Name: FX.11.S2x6.16

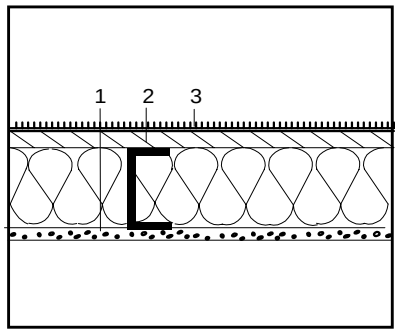

Sketch of Construction Assembly

Assembly Type: (check one)
- ✓ Floor
- Wall
- Ceiling/Roof

Framing Material: Metal

Framing Spacing: 16 "o.c.

Framing Size:
- Actual Depth: 6.000
- Actual Width: 1.625

Cavity Insulation:
- R-value: 11.000
- Knock-out (%): 15.000
- Web Thickness: 0.060

Insulation Tape R-value:
- Interior Flange:
- Exterior Flange:

List of Construction Components		R-Value
	Outside Surface Air Film	0.170
1.	0.75 in polyisocyanurate	5.280
2.	0.625 in plywood	0.780
3.	Carpet & pad	2.080
4.		
5.		
6.		
7.		
	Inside Surface Air Film	0.920

Calculation:

From EZFRAME = $\boxed{0.071}$

Total U-Value

$$\underbrace{1/0.071}_{1\div \text{Total U-Value}} = 14.16$$

Total R-Value

Reference Name: FC.13.2x6.16

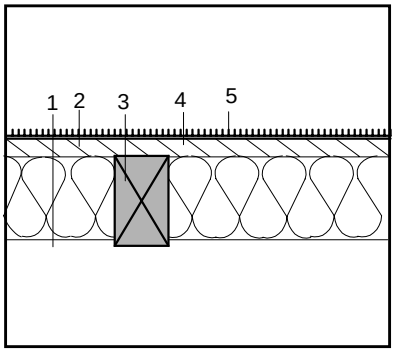

Sketch of Construction Assembly

Assembly Type: (check one)	✓	Floor	
		Wall	
		Ceiling/Roof	
Framing Material:	Wood		
Framing Size:	2 × 6		
Framing Spacing:	16	"o.c.	
Framing Percentage: (check one)	Wall:		15% (16"o.c.)
			12% (24"o.c.)
			9% (48"o.c.)
	Floor/Ceiling	✓	10% (16"o.c.)
			7% (24"o.c.)
			4% (48"o.c.)
Wall Weight / sf: (Packages only)	NA		

List of Construction Components		R-Value: Cavity (R_c)	R-Value: Frame (R_f)
	Outside Surface Air Film	0.170	0.170
1.	Effective R-Value of vented crawlspace	6.000	6.000
2.	R-13 fiberglass insulation	13.000	-----
3.	2x6 in fir framing	-----	5.445
4.	0.625 in plywood	0.780	0.780
5.	Carpet & pad	2.080	2.080
6.			
7.			
	Inside Surface Air Film	0.920	0.920
	Total Unadjusted R-Values:	22.950	15.395
		R_c	R_f

Framing Adjustment Calculation:

$$[(\underset{1\div R_c}{1/22.950}) \times (\underset{1-(Fr.\%\div 100)}{1-10/100})] + [(\underset{1\div R_f}{1/15.395}) \times (\underset{Fr.\%\div 100}{10/100})] = \boxed{0.046}$$

Total U-Value

$$\underset{1\div \text{Total U-Value}}{1/0.046} = \underset{\textbf{Total R-Value}}{21.740}$$

Reference Name: FC.13.S2x6.16

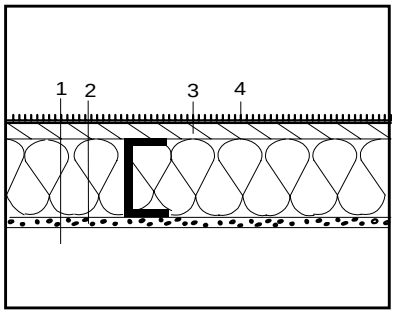

Sketch of Construction Assembly

Assembly Type: (check one)	✓	Floor	
		Wall	
		Ceiling/Roof	
Framing Material:	Metal		
Framing Spacing:	16	"o.c.	
Framing Size:	Actual Depth	6.000	
	Actual Width	1.625	
Cavity Insulation:	R-value	13.000	
	Knock-out (%)	15.000	
	Web Thickness	0.060	
Insulation Tape R-value:	Interior Flange		
	Exterior Flange		

List of Construction Components		R-Value
	Outside Surface Air Film	0.170
1.	Effective R-Value of vented crawlspace	6.000
2.	1.00 in polyisocyanurate	7.040
3.	0.625 in plywood	0.780
4.	Carpet & pad	2.080
5.		
6.		
7.		
	Inside Surface Air Film	0.920

Calculation:

From EZFRAME = **0.043**

Total U-Value

$$\underset{1\div \text{Total U-Value}}{1/0.043} = \underset{\textbf{Total R-Value}}{23.340}$$

Reference Name: FX.13.2x6.16

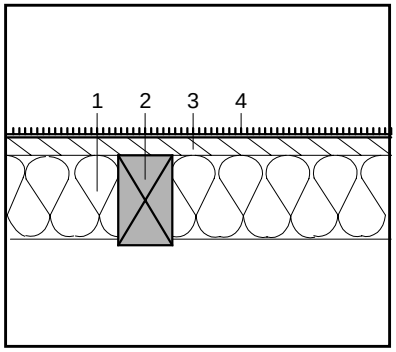

Sketch of Construction Assembly

Assembly Type: (check one)
- ✓ Floor
- Wall
- Ceiling/Roof

Framing Material: Wood

Framing Size: 2 × 6

Framing Spacing: 16 "o.c.

Framing Percentage: (check one)

Wall:		15% (16"o.c.)
		12% (24"o.c.)
		9% (48"o.c.)
Floor/Ceiling	✓	10% (16"o.c.)
		7% (24"o.c.)
		4% (48"o.c.)

Wall Weight / sf: NA
(Packages only)

List of Construction Components		R-Value: Cavity (R_c)	R-Value: Frame (R_f)
	Outside Surface Air Film	0.170	0.170
1.	R-13 fiberglass insulation	13.000	-----
2.	2x6 in fir framing	-----	5.445
3.	0.625 in plywood	0.780	0.780
4.	Carpet & pad	2.080	2.080
5.			
6.			
7.			
	Inside Surface Air Film	0.920	0.920
	Total Unadjusted R-Values:	16.950	9.395
		R_c	R_f

Framing Adjustment Calculation:

$$[(\underbrace{1/16.950}_{1\div R_c}) \times (\underbrace{1-10/100}_{1-(Fr.\%\div 100)})] + [(\underbrace{1/9.395}_{1\div R_f}) \times (\underbrace{10/100}_{Fr.\%\div 100})] = \boxed{0.064}$$

Total U-Value

$$\underbrace{1/0.064}_{1\div \text{Total U-Value}} = 15.625$$

Total R-Value

Reference Name: FX.13.S2x6.16

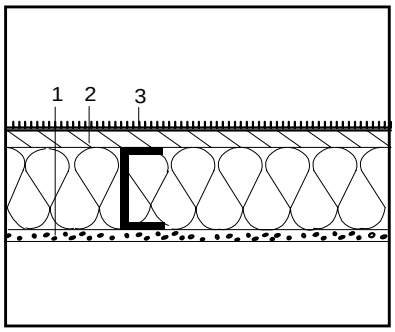

Sketch of Construction Assembly

Assembly Type: (check one)
- ✓ Floor
- Wall
- Ceiling/Roof

Framing Material: Metal

Framing Spacing: 16 "o.c.

Framing Size:
- Actual Depth: 6.000
- Actual Width: 1.625

Cavity Insulation:
- R-value: 13.000
- Knock-out (%): 15.000
- Web Thickness: 0.060

Insulation Tape R-value:
- Interior Flange:
- Exterior Flange:

List of Construction Components		R-Value
	Outside Surface Air Film	0.170
1.	1.00 in polyisocyanurate	7.040
2.	0.625 in plywood	0.780
3.	Carpet & pad	2.080
4.		
5.		
6.		
7.		
	Inside Surface Air Film	0.920

Calculation:

From EZFRAME = **0.058**

Total U-Value

$$\underbrace{1/0.058}_{1\div \text{Total U-Value}} = 17.340$$

Total R-Value

Reference Name: FC.19.2x8.16

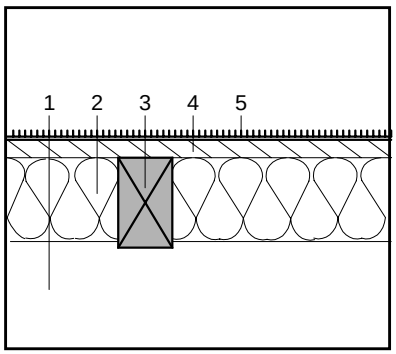

Sketch of Construction Assembly

Assembly Type: (check one)	✓	Floor	
		Wall	
		Ceiling/Roof	
Framing Material:	Wood		
Framing Size:	2 × 8		
Framing Spacing:	16	"o.c.	
Framing Percentage: (check one)	Wall:		15% (16"o.c.)
			12% (24"o.c.)
			9% (48"o.c.)
	Floor/Ceiling	✓	10% (16"o.c.)
			7% (24"o.c.)
			4% (48"o.c.)
Wall Weight / sf: (Packages only)	NA		

List of Construction Components	**R-Value** Cavity (R_c)	Frame (R_f)
Outside Surface Air Film	0.170	0.170
1. Effective R-value of vented crawlspace	6.000	6.000
2. R-19 fiberglass insulation	19.000	-----
3. 7.25 in fir framing	-----	7.178
4. 0.625 in plywood	0.780	0.780
5. Carpet & pad	2.080	2.080
6.		
7.		
Inside Surface Air Film	0.920	0.920
Total Unadjusted R-Values:	28.950	17.128
	R_c	R_f

Framing Adjustment Calculation:

$$[(\frac{1}{1 \div R_c}) \times (\frac{1-10/100}{1-(Fr.\% \div 100)})] + [(\frac{1}{1 \div R_f}) \times (\frac{10}{Fr.\% \div 100})] = \boxed{0.037}$$

Total U-Value

$$\frac{1/0.037}{1 \div \text{Total U-Value}} = 27.027$$

Total R-Value

Reference Name: FC.19.S2x8.16

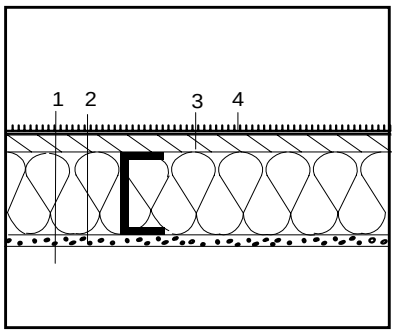

Sketch of Construction Assembly

Assembly Type: (check one)	✓	Floor
		Wall
		Ceiling/Roof
Framing Material:	Metal	
Framing Spacing:	16	"o.c.
Framing Size:	Actual Depth	8.00
	Actual Width	1.625
Cavity Insulation:	R-value	19.000
	Knock-out (%)	15.000
	Web Thickness	0.060
Insulation Tape R-value:	Interior Flange	
	Exterior Flange	

List of Construction Components	**R-Value**
Outside Surface Air Film	0.170
1. Effective R-value of vented crawlspace	6.000
2. 1.50 in polyisocyanurate	10.560
3. 0.625 in plywood	0.780
4. Carpet & pad	2.080
5.	
6.	
7.	
Inside Surface Air Film	0.920

Calculation:

From EZFRAME = $\boxed{0.035}$

Total U-Value

$$\frac{1/0.035}{1 \div \text{Total U-Value}} = 28.700$$

Total R-Value

Reference Name: FX.19.2x8.16

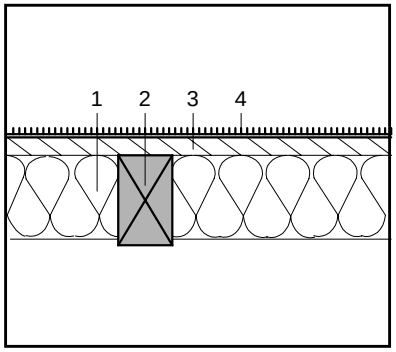

Sketch of Construction Assembly

Assembly Type: ✓ Floor
(check one) Wall
Ceiling/Roof

Framing Material: Wood
Framing Size: 2 × 8
Framing Spacing: 16 "o.c.
Framing Percentage: Wall: 15% (16"o.c.)
(check one) 12% (24"o.c.)
9% (48"o.c.)
Floor/Ceiling ✓ 10% (16"o.c.)
7% (24"o.c.)
4% (48"o.c.)

Wall Weight / sf: NA
(Packages only)

List of Construction Components		R-Value: Cavity (R_c)	R-Value: Frame (R_f)
	Outside Surface Air Film	0.170	0.170
1.	R-19 fiberglass insulation	19.000	-----
2.	7.25 in fir framing	-----	7.178
3.	0.625 in plywood	0.780	0.780
4.	Carpet & pad	2.080	2.080
5.			
6.			
7.			
	Inside Surface Air Film	0.920	0.920
	Total Unadjusted R-Values:	22.950	11.128
		R_c	R_f

Framing Adjustment Calculation:

$$[(\underset{1\div R_c}{1/22.950}) \times (\underset{1-(Fr.\%\div 100)}{1-10/100})] + [(\underset{1\div R_f}{1/11.128}) \times (\underset{Fr.\%\div 100}{10/100})] = \boxed{0.049}$$

Total U-Value

$$\underset{1\div \text{Total U-Value}}{1/0.049} = \underset{\textbf{Total R-Value}}{20.408}$$

Reference Name: FX.19.S2x8.16

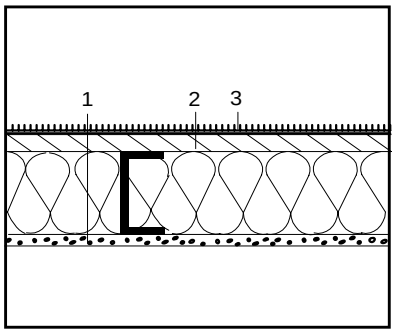

Sketch of Construction Assembly

Assembly Type: ✓ Floor
(check one) Wall
Ceiling/Roof

Framing Material: Metal
Framing Spacing: 16 "o.c.
Framing Size: Actual Depth 8.000
Actual Width 1.625
Cavity Insulation: R-value 19.000
Knock-out (%) 15.000
Web Thickness 0.060
Insulation Tape R-value: Interior Flange
Exterior Flange

List of Construction Components		R-Value
	Outside Surface Air Film	0.170
1.	1.25 in polyisocyanurate	8.800
2.	0.625 in plywood	0.780
3.	Carpet & pad	2.080
4.		
5.		
6.		
7.		
	Inside Surface Air Film	0.920

Calculation:

From EZFRAME = **0.048**

Total U-Value

$$\underset{1\div \text{Total U-Value}}{1/0.048} = \underset{\textbf{Total R-Value}}{20.950}$$

Reference Name: FC.21.2x8.16

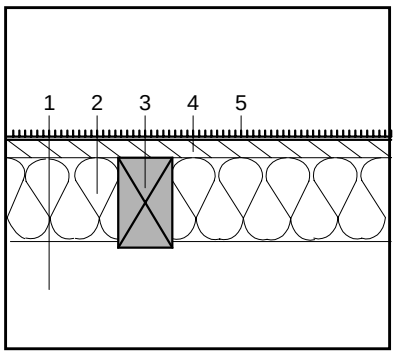

Sketch of Construction Assembly

Assembly Type: (check one)	✓	Floor	
		Wall	
		Ceiling/Roof	
Framing Material:	Wood		
Framing Size:	2 × 8		
Framing Spacing:	16	"o.c.	
Framing Percentage: (check one)	Wall:		15% (16"o.c.)
			12% (24"o.c.)
			9% (48"o.c.)
	Floor/Ceiling	✓	10% (16"o.c.)
			7% (24"o.c.)
			4% (48"o.c.)
Wall Weight / sf: (Packages only)	NA		

List of Construction Components	**R-Value** Cavity (R_c)	Frame (R_f)
Outside Surface Air Film	0.170	0.170
1. Effective R-value of vented crawlspace	6.000	6.000
2. R-21 fiberglass insulation	21.000	-----
3. 7.25 in fir framing	-----	7.178
4. 0.625 in plywood	0.780	0.780
5. Carpet & pad	2.080	2.080
6.		
7.		
Inside Surface Air Film	0.920	0.920
Total Unadjusted R-Values:	30.950	17.128
	R_c	R_f

Framing Adjustment Calculation:

$$[(\underset{1\div R_c}{1/30.950}) \times (\underset{1-(Fr.\%\div 100)}{1-10/100})] + [(\underset{1\div R_f}{1/17.128}) \times (\underset{Fr.\%\div 100}{10/100})] = \boxed{0.032}$$

Total U-Value

$$\frac{1/0.032}{1\div \text{Total U-Value}} = 31.250$$

Total R-Value

Reference Name: FC.21.S2x8.16

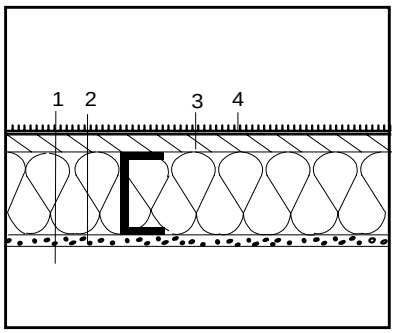

Sketch of Construction Assembly

Assembly Type: (check one)	✓	Floor
		Wall
		Ceiling/Roof
Framing Material:	Metal	
Framing Spacing:	16	"o.c.
Framing Size:	Actual Depth	8.000
	Actual Width	1.625
Cavity Insulation:	R-value	21.000
	Knock-out (%)	15.000
	Web Thickness	0.060
Insulation Tape R-value:	Interior Flange	
	Exterior Flange	

List of Construction Components	**R-Value**
Outside Surface Air Film	0.170
1. Effective R-value of vented crawlspace	6.000
2. 1.50 in polyisocyanurate	10.560
3. 0.625 in plywood	0.780
4. Carpet & pad	2.080
5.	
6.	
7.	
Inside Surface Air Film	0.920

Calculation:

From EZFRAME = $\boxed{0.034}$

Total U-Value

$$\frac{1/0.034}{1\div \text{Total U-Value}} = 29.080$$

Total R-Value

Reference Name: FX.21.2x8.16

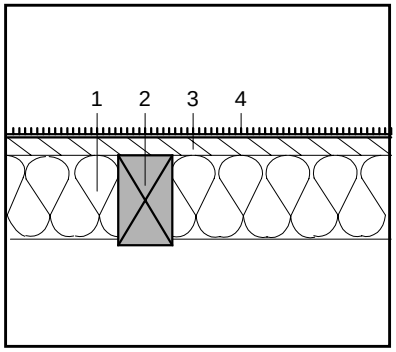

Sketch of Construction Assembly

Assembly Type: (check one)
- ✓ Floor
- Wall
- Ceiling/Roof

Framing Material: Wood

Framing Size: 2 × 8

Framing Spacing: 16 "o.c.

Framing Percentage: (check one)

Wall:		15% (16"o.c.)
		12% (24"o.c.)
		9% (48"o.c.)
Floor/Ceiling	✓	10% (16"o.c.)
		7% (24"o.c.)
		4% (48"o.c.)

Wall Weight / sf: NA (Packages only)

List of Construction Components		R-Value: Cavity (R_c)	R-Value: Frame (R_f)
	Outside Surface Air Film	0.170	0.170
1.	R-21 fiberglass insulation	21.000	-----
2.	7.25 in fir framing	-----	7.178
3.	0.625 in plywood	0.780	0.780
4.	Carpet & pad	2.080	2.080
5.			
6.			
7.			
	Inside Surface Air Film	0.920	0.920
	Total Unadjusted R-Values:	24.950	11.128
		R_c	R_f

Framing Adjustment Calculation:

$$[(\underset{1\div R_c}{1/24.950}) \times (\underset{1-(Fr.\%\div 100)}{1-10/100})] + [(\underset{1\div R_f}{1/11.128}) \times (\underset{Fr.\%\div 100}{10/100})] = \boxed{0.045}$$

Total U-Value

$$\underset{1\div \text{Total U-Value}}{1/0.045} = \underset{\textbf{Total R-Value}}{22.222}$$

Reference Name: FX.21.S2x8.16

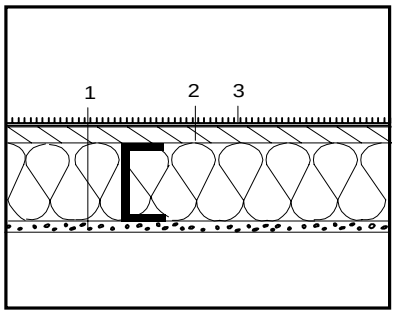

Sketch of Construction Assembly

Assembly Type: (check one)
- ✓ Floor
- Wall
- Ceiling/Roof

Framing Material: Metal

Framing Spacing: 16 "o.c.

Framing Size:
- Actual Depth: 8.000
- Actual Width: 1.625

Cavity Insulation:
- R-value: 21.000
- Knock-out (%): 15.000
- Web Thickness: 0.060

Insulation Tape R-value:
- Interior Flange:
- Exterior Flange:

List of Construction Components		R-Value
	Outside Surface Air Film	0.170
1.	1.50 in polyisocyanurate	10.560
2.	0.625 in plywood	0.780
3.	Carpet & pad	2.080
4.		
5.		
6.		
7.		
	Inside Surface Air Film	0.920

Calculation:

From EZFRAME = **0.043**

Total U-Value

$$\underset{1\div \text{Total U-Value}}{1/0.043} = \underset{\textbf{Total R-Value}}{23.080}$$

Reference Name: FC.30.2x10.16

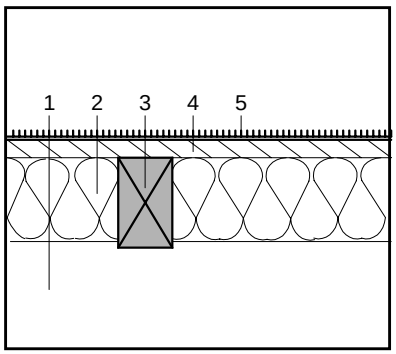

Sketch of Construction Assembly

Assembly Type: (check one)	✓	Floor	
		Wall	
		Ceiling/Roof	
Framing Material:	Wood		
Framing Size:	2 × 8		
Framing Spacing:	16	"o.c.	
Framing Percentage: (check one)	Wall:		15% (16"o.c.)
			12% (24"o.c.)
			9% (48"o.c.)
	Floor/Ceiling	✓	10% (16"o.c.)
			7% (24"o.c.)
			4% (48"o.c.)
Wall Weight / sf: (Packages only)	NA		

List of Construction Components	**R-Value** Cavity (R_c)	Frame (R_f)
Outside Surface Air Film	0.170	0.170
1. Effective R-value of vented crawlspace	6.000	6.000
2. R-30 fiberglass insulation	30.000	-----
3. 9.25 in fir framing	-----	9.158
4. 0.625 in plywood	0.780	0.780
5. Carpet & pad	2.080	2.080
6.		
7.		
Inside Surface Air Film	0.920	0.920
Total Unadjusted R-Values:	39.950	19.028
	R_c	R_f

Framing Adjustment Calculation:

$$[(\underset{1\div R_c}{1/39.950}) \times (\underset{1-(Fr.\%\div 100)}{1-10/100})] + [(\underset{1\div R_f}{1/19.028}) \times (\underset{Fr.\%\div 100}{10/100})] = \boxed{0.028}$$

Total U-Value

$$\underset{1\div \text{Total U-Value}}{1/0.028} = \underset{\textbf{Total R-Value}}{35.714}$$

Reference Name: FC.30.S2x10.16

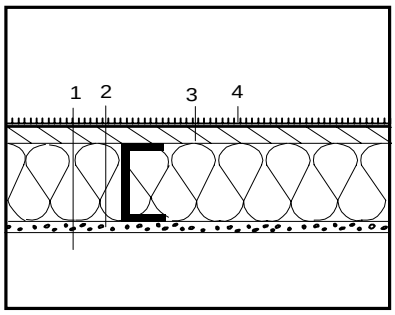

Sketch of Construction Assembly

Assembly Type: (check one)	✓	Floor
		Wall
		Ceiling/Roof
Framing Material:	Metal	
Framing Spacing:	16	"o.c.
Framing Size:	Actual Depth	10.000
	Actual Width	1.625
Cavity Insulation:	R-value	30.000
	Knock-out (%)	15.000
	Web Thickness	0.060
Insulation Tape R-value:	Interior Flange	
	Exterior Flange	

List of Construction Components	**R-Value**
Outside Surface Air Film	0.170
1. Effective R-value of vented crawlspace	6.000
2. 2.50 in polyisocyanurate	17.600
3. 0.625 in plywood	0.780
4. Carpet & pad	2.080
5.	
6.	
7.	
Inside Surface Air Film	0.920

Calculation:

From EZFRAME = $\boxed{0.026}$

Total U-Value

$$\underset{1\div \text{Total U-Value}}{1/0.026} = \underset{\textbf{Total R-Value}}{38.110}$$

Reference Name: FX.30.2x10.16

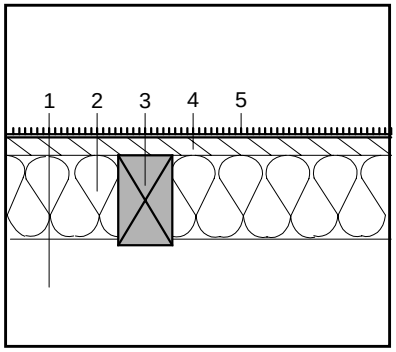

Sketch of Construction Assembly

Assembly Type: (check one)
- ✓ Floor
- Wall
- Ceiling/Roof

Framing Material: Wood

Framing Size: 2 × 8

Framing Spacing: 16 "o.c.

Framing Percentage: (check one)

Wall:		15% (16"o.c.)
		12% (24"o.c.)
		9% (48"o.c.)
Floor/Ceiling	✓	10% (16"o.c.)
		7% (24"o.c.)
		4% (48"o.c.)

Wall Weight / sf: NA (Packages only)

List of Construction Components		**R-Value** Cavity (R_c)	Frame (R_f)
	Outside Surface Air Film	0.170	0.170
1.	R-30 fiberglass insulation	30.000	-----
2.	9.25 in fir framing	-----	9.158
3.	0.625 in plywood	0.780	0.780
4.	Carpet & pad	2.080	2.080
5.			
6.			
7.			
	Inside Surface Air Film	0.920	0.920
	Total Unadjusted R-Values:	33.950	13.108
		R_c	R_f

Framing Adjustment Calculation:

$$[(\underset{1\div R_c}{1/33.950}) \times (\underset{1-(Fr.\%\div 100)}{1-10/100})] + [(\underset{1\div R_f}{1/13.108}) \times (\underset{Fr.\%\div 100}{10/100})] = \boxed{0.034}$$

Total U-Value

$$\underset{1\div \text{Total U-Value}}{1/0.034} = 29.412$$

Total R-Value

Reference Name: FX.30.S2x10.16

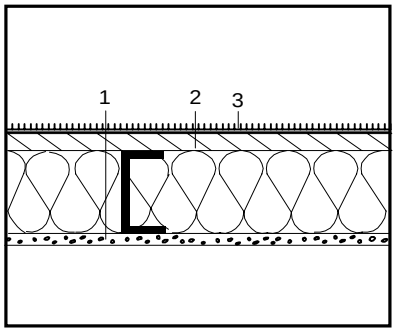

Sketch of Construction Assembly

Assembly Type: (check one)
- ✓ Floor
- Wall
- Ceiling/Roof

Framing Material: Metal

Framing Spacing: 16 "o.c.

Framing Size:
- Actual Depth: 10.000
- Actual Width: 1.625

Cavity Insulation:
- R-value: 38.000
- Knock-out (%): 15.000
- Web Thickness: 0.060

Insulation Tape R-value:
- Interior Flange:
- Exterior Flange:

List of Construction Components		**R-Value**
	Outside Surface Air Film	0.170
1.	2.50 in polyisocyanurate	17.600
2.	0.625 in plywood	0.780
3.	Carpet & pad	2.080
4.		
5.		
6.		
7.		
	Inside Surface Air Film	0.920

Calculation:

From EZFRAME = **0.031**

Total U-Value

Computer Modeling of Framed Assemblies

$$\underset{1\div \text{Total U-Value}}{1/0.031} = 32.110$$

Total R-Value

EZFrame can be purchased by ordering the following:

Publication No.:	P400-94-002R
Cost:	$14.00
Address:	California Energy Commission Publications, MS-13 P.O. Box 944295 Sacramento, CA 94244-2950

Or Download Free *EZFrame* Computer Modeling of Framed Assemblies Program at the following ftp site:

ftp://energy.ca.gov/pub/efftech/

Table B-8A: Fan Motor Efficiencies (< 1 HP)

Nameplate or Brake Horsepower	Standard Fan Motor Efficiency	NEMA* High Efficiency	Premium Efficiency
1/20	40%	...	...
1/12	49%	...	...
1/8	55%	...	...
1/6	60%	...	...
1/4	64%	...	...
1/3	66%	...	...
1/2	70%	76.0%	80.0%
3/4	72%	77.0%	84.0%

NOTE: For default drive efficiencies, See Section 4.2.2

*NEMA - Proposed standard using test procedures.
Minimum NEMA efficiency per test IEEE 112b Rating Method.

TABLE B-8B: Fan Motor Efficiencies (1 HP and over)

	Open Motors				Enclosed Motors			
Number of Poles Synchronous Speed	**2** **3600**	**4** **1800**	**6** **1200**	**8** **900**	**2** **3600**	**4** **1800**	**6** **1200**	**8** **900**
Motor Horsepower								
1	—	82.5	80.0	74.0	75.5	82.5	80.0	74.0
1.5	82.5	84.0	84.0	75.5	82.5	84.0	85.5	77.0
2	84.0	84.0	85.5	85.5	84.0	84.0	86.5	82.5
3	84.0	86.5	86.5	86.5	85.5	87.5	87.5	84.0
5	85.5	87.5	87.5	87.5	87.5	87.5	87.5	85.5
7.5	87.5	88.5	88.5	88.5	88.5	89.5	89.5	85.5
10	88.5	89.5	90.2	89.5	89.5	89.5	89.5	88.5
15	89.5	91.0	92.0	89.5	90.2	91.0	90.2	88.5
20	90.2	91.0	91.0	90.2	90.2	91.0	90.2	89.5
25	91.0	91.7	91.7	90.2	91.0	92.4	91.7	89.5
30	91.0	92.4	92.4	91.0	91.0	92.4	91.7	91.0
40	91.7	93.0	93.0	91.0	91.7	93.0	93.0	91.0
50	92.4	93.0	93.0	91.7	92.4	93.0	93.0	91.7
60	93.0	93.6	93.6	92.4	93.0	93.6	93.6	91.7
75	93.0	94.1	93.6	93.6	93.0	94.1	93.6	93.0
100	93.0	94.1	94.1	93.6	93.6	94.5	94.1	93.0
125	93.6	94.5	94.1	93.6	94.5	94.5	94.1	93.6
150	93.6	95.0	94.5	93.6	94.5	95.0	95.0	93.6
200	94.5	95.0	94.5	93.6	95.0	95.0	95.0	94.1
250	94.5	95.0	95.4	94.5	95.4	95.0	95.0	94.5
300	95.0	95.4	95.4	—	95.4	95.4	95.0	—
350	95.0	95.4	95.4	—	95.4	95.4	95.0	—
400	95.4	95.4	—	—	95.4	95.4	—	—
450	95.8	95.8	—	—	95.4	95.4	—	—
500	95.8	95.8	—	—	95.4	95.8	—	—

Table B-9~~10~~: Illuminance Categories

NOTE: This table is taken from the *Office Lighting American National Standard Practice*, ANSI/IES RP-1, 1993. The table is produced in its entirely, including captions and footnotes. Permission to reprint is pending.

TABLE 3: Currently recommended illuminance categories for lighting design --target maintained values (See Table 4 for Illuminance Values). These recommendations provide a guide for efficient visual performance in office spaces rather than for safety alone. For a tabulation of minimum levels of illumination required for safety, see Table 7.

	Illuminance Category	Veiling Reflectance
Accounting		
(see individual tasks)		
Copied Tasks		
Ditto Copy (6)	E	!
Micro-fiche reader (1)	B	!!
Mimeograph	D	
Photographs, mod. detail	E	!!
Thermal copy, poor copy	F	!
Xerography, 3rd generation (6) and greater	E	
Xerograph	D	
Drafting Tasks		
Drafting: Mylar		
High contrast media; India ink, plastic leads, soft graphite leads	E	!
Low contrast media, hard graphite leads	F	!
Vellum: high contrast	E	!
low contrast	F	
Tracing paper: high contrast	E	!
low contrast	F	
Overlays (2)		
Light Table	C	
Prints: Blue Line	E	
Blueprints	E	
Sepia prints	F	

TABLE 3 (continued)	Illuminace Category	Veiling Reflectance
EDP Tasks		
CRT Screens (1)	B	!!
Impact printer: good ribbon	D	
poor ribbon (6)	E	
2nd carbon and greater (6)	E	
Ink jet printer	D	
Keyboard reading	D	
Machine rooms: active operations	D	
tape storage	D	
machine area	C	
equipement service (3)	E	
Thermal print	E	!
Filing		
(see individual tasks)		
General and Public Areas		
AV areas	D	
Conference rooms	D	
(critical seeing, refer to individual tasks)		
Display areas (4)	C	
Duplicating and off-set printing area	D	
Elevators	C	
Escalators	C	
First aid areas	E	
Food service (7)		
Hallways	B	
Janitorial spaces	C	
Libraries (7)		
Lobbies and lounges	C	
Model making	F	
Mail sorting	E	
Mechanical rooms: operation	B	
equipment service (3)	E	
Reception area	C	
Rest rooms	C	
Stairs	B	
Utility rooms	B	
Graphic Design and Material		
Color selection (5)	F	
Charting and mapping	F	
Graphs	E	
Keylining	F	
Layout and artwork	F	
Photographs, mod. detail	E	!!
Handwritten Tasks		
#2 pencil and softer leads	D	!
#3 pencil	E	!
#4 pencil and harder leads (6)	F	!
Ball-point pen	D	!
Felt-tip pen	D	
Handwritten carbon copies (6)	E	
Non photographically reproducible colors	F	

TABLE 3 (continued)	Illuminace Category	Veiling Reflectance
Printed Tasks		
6 pt (6) see 2.4	E	!
8 & 10 pt	D	!
Glossy magazines	D	!!
Maps	E	
Newsprint	D	
Typed Originals	D	
Typed 2nd carbon and later (6)	E	
Telephone books	E	

NOTES:

1. Veiling reflections may be produced on glass surfaces. It may be necessary to treat plus weighting factors as minus in order to obtain proper light balance.

2. Degradation factors: Overlays--add 1 weighing factor for each overlay
   Used material--estimate additional factors
   See Table 4

3. Only when actual equipment service is in progress. May be achieved by a general lighting system or by localized lighting or by portable equipment.

4. For details on the lighting of display refer to Recommended Practice for Lighting Merchandise Areas. (10)

5. For color matching, the quality of the color of the light source may be important.

6. Designing to higher levels to accommodate poor quality tasks should be undertaken only after it is determined that task quality cannot be improved. If a poor quality task cannot be eliminated, its "time-and-importance" factor should be carefully considered before allowing it to govern the illuminance level selection.

7. See Reference 9.

! Task subject to veiling reflections. Illuminance listed is not an ESI value. Currently, insufficient experience in the use of ESI target values precludes the direct use of Equivalent Sphere Illumination in the present consensus approach recommend illuminance values. Equivalent Sphere Illumination may be used as a tool in determining the effectiveness of controlling veiling reflections and as part of the evaluation of lighting systems.

!! Especially subject to veiling reflectances. It may be necessary to shield the task or to reorient it.

Definition of Merchandising and Associated Service Areas in Stores

NOTE: This table is taken from the *Recommended Practice for Lighting Merchandising Areas*, IES RP-2. The table is produced in its entirety, including captions and footnotes. Permission to reprint is pending.

TABLE 1 -- Currently Recommended Illuminance for Lighting Design in Merchandising and Associated Areas -- Target Maintained Levels

Areas or Tasks	Description	Type of Activity Area*	Lux	Foot-candles
Circulation	Area not used for display or appraisal of merchandise for sales transactions	High activity Medium activity Low activity	300 400 100	30 20 10
Merchandise*** (including showcases & wall displays)	That plane area, horizontal to vertical, where merchandise is displayed and readily accessible for customer examination	High activity Medium activity Low activity	1000 750 300	100 75 30
Show windows				
Daytime lighting				
General			2000	200
Feature			10000	1000
Nighttime lighting				
Main business districts-highly competitive				
General			2000	200
Feature			10000	1000
Secondary business districts or small towns				
General			1000	100
Feature			5000	500
Sales Transactions	Areas used for employee price verification and for recording transactions	Reading of copied, written, printed or EDP information		See Table 2
Support Services	Store spaces where merchandising is a prime consideration	Alteration fitting stock, wrapping and packaging rooms		See Table 2

NOTES:

* One store may encompass all three types within the building: High Activity area -- where merchandise displayed has recognizable usage. Evaluation and viewing time is rapid, and merchandise is sown to attract and stimulate the impulse buying decision; Medium Activity -- where merchandise is familiar in type or usage, but the customer may require time and/or help in evaluation of quality, usage, or for the decision to buy; and Low Activity -- where merchandise is displayed that is purchased less frequently by the customer, who may be unfamiliar with the inherent quality, design, value or usage. Where assistance and time is necessary to reach a buying decision.

** Maintained on the task or in the area at any time.

*** Lighting levels to be maintained in the plane of the merchandise.

Fig. 2-1. Currently Recommended Illuminance Categories and Illuminance Values for Lighting Design -- Targeted Maintenance Levels.

The tabulation that follows is a consolidated listing of the Society's current illuminance recommendations. This listing is intended to guide the lighting designer in selecting an appropriate illuminance for design and evaluation of lighting systems.

Guidance is provided in two forms: (1), in Parts I, II and III as an *Illuminance Category*, representing a range of illuminances (see page 2-3 for a method of selecting a value within each illuminance range); and (2), in parts IV, V and VI as an *Illuminance Value*. Illuminance Values are given in *lux* with an approximate equivalence in footcandles and as such are intended as *target* (nominal) values with deviations expected. These target values also represent maintained values (see page 2-23).

This table has been divided into the six parts for ease of use. Part I provides a listing of both Illuminance Categories and Illuminance Values for generic types of interior activities and normally is to be used when Illuminance Categories for a specific Area/Activity cannot be found in parts II and III. Parts IV, V and VI provide target maintained Illuminance Values for outdoor facilities sports and recreational areas, and transportation vehicles where special considerations apply as discussed on page 2-4.

In all cases the recommendations in this table are based on the assumption that the lighting will be properly designed to take into account the visual characteristics of the task. See the design information in the particular application sections in this Application Handbook for further recommendations.

II. Commercial, Institutional, Residential and Public Assembly Interiors

Area/Activity	Illuminance Category
Accounting (see **Reading**)	
Air terminals (see Transportation terminals)	
Armories	C[1]
Art galleries (see **Museums**)	
Auditoriums	
Assembly	C[1]
Social activity	B
Banks	
Lobby	
General	C
Writing area	D
Tellers' stations	E[3]
Barber shops and beauty parlors	E
Churches and synagogues	(see page 7-2)[4]
Club and lodge rooms	
Lounge and reading	D
Conference rooms	
Conferring	D
Critical seeing (refer to individual task)	
Court rooms	
Seating area	C
Court activity area	E[3]
Dance halls and discotheques	B
Depots, terminals and stations	
(see **Transportation terminals)**	
Drafting	
Mylar	
High contrast media; India ink, plastic leads, soft graphite leads	E[3]
Low contrast media; hard graphite leads	F[3]
Vellum	
High contrast	E[3]
Low contrast	F[3]
Tracing paper	
High contrast	E[3]
Low contrast	F[3]
Overlays[5]	
Light table	C
Prints	
Blue line	E
Blueprints	E
Sepia prints	F

NOTE: This table is taken from the Figure 2-2 of the IES Lighting Handbook 1982 Application Volume. Part II of the table is produced in its entirety, with captions and footnotes. Permission to reprint is pending.

Fig. 2-1. *Continued*

II. *Continued*

Area/Activity	Illuminance Category
Educational facilities	
Classrooms	
General (see **Reading**)	
Drafting (see **Drafting**)	
Home economics (see **Residences**)	
Science laboratories	E
Lecture rooms	
Audience (see **Reading**)	
Demonstration	F
Music rooms (see **Reading**)	
Shops (see Part III, Industrial Group)	
Sight saving rooms	F
Study halls (see **Reading**)	
Typing (see **Reading**)	
Sports facilities (see Part V, Sports and Recreational Areas)	
Cafeterias (see **Food service facilities**)	
Dormitories (see **Residences**)	
Elevator, freight and passenger	C
Exhibition halls	C[1]
Filing (refer to individual task)	
Financial facilities (see **Banks**)	
Fire halls (see **Municipal buildings**)	
Food service facilities	
Dining areas	
Cashier	D
Cleaning	C
Dining	B[6]
Food displays (see **Merchandising spaces**)	
Kitchen	E
Garages -- parking	(see page 14-28)
Gasoline stations (see **Service stations**)	
Graphic design and material	
Color selection	F[11]
Charting and mapping	F
Graphs	E
Keylining	F
Layout and artwork	F
Photographs, moderate detail	E[13]
Health care facilities	
Ambulance (local)	E
Anesthetizing	E
Autopsy and morgue[17, 18]	
Autopsy, general	E
Autopsy table	G
Morgue, general	D

Area/Activity	Illuminance Category
Museum	E

Cardiac function lab	E
Central sterile supply	
Inspection, general	E
Inspection	F
At sinks	E
Work areas, general	D
Processed storage	D
Corridors[17]	
Nursing areas -- day	C
Nursing areas -- night	B
Operating areas, delivery, recovery, and laboratory suites and service	E
Critical care areas[17]	
General	C
Examination	E
Surgical task lighting	H
Hand washing	F
Cystoscopy room [17,18]	
Dental suite [17]	
General	D
Instrument tray	E
Oral Cavity	H
Prosthetic laboratory, general	D
Prosthetic laboratory, work bench	E
Prosthetic, laboratory, local	F
Recovery room, general	C
Recovery room, emergency examination	E
Dialysis unit, medical[17]	F
Elevators	C
EKG and specimen room[17]	
General	B
On equipment	C
Emergency outpatient[17]	
General	E
Local	F
Endoscopy rooms [17, 18]	
General	E
Peritoneoscopy	D
Culdoscopy	D
Examination and treatment rooms [17]	
General	D
Local	E
Eye surgery[17, 18]	F
Fracture room[17]	
General	E
Local	F
Inhalation therapy	D
Laboratories[17]	
Specimen collecting	E
Tissue laboratories	F
Microscopic reading room	D
Gross specimen review	F
Chemistry rooms	E

Fig. 2-1. *Continued*

II. *Continued*

Area/Activity	Illuminance Category
Bacteriology rooms	
General	E
Reading culture plates	F
Hematology	E
Linens	
Sorting soiled linen	D
Central (clean) linen room	D
Sewing room, general	D
Sewing room, work area	E
Linen closet	B
Lobby	C
Locker rooms	C
Medical illustration studio[17, 18]	F
Medical records	E
Nurseries[17]	
General[18]	C
Observation and treatment	E
Nursing stations[17]	
General	D
Desk	E
Corridors, day	C
Corridors, night	A
Medication station	E
Obstetric delivery suite[17]	
Labor rooms	
General	C
Local	E
Birthing room	F
Delivery area	
Scrub, general	F
General	G
Delivery table	(see page 7-19)
Resuscitation	G
Post delivery recovery area	E
Substerilizing room	B
Occupational therapy[17]	
Work area, general	D
Work tables or benches	E
Patients' rooms[17]	
General[18]	B
Observation	A
Critical examination	E
Reading	D
Toilets	D
Pharmacy[17]	
General	E
Alcohol vault	D
Laminar flow bench	F
Night light	A
Parenteral solution room	D
Physical therapy departments	
Gymnasiums	D
Tank rooms	D
Treatment cubicles	D
Postanesthetic recovery room[17]	
General[18]	E
Local	H
Pulmonary function laboratories[17]	E

Radiological suite[17]	
Diagnostic section	
General[18]	A
Waiting area	A
Radiographic/fluoroscopic room	A
Film sorting	F
Barium kitchen	E
Radiation therapy section	
General[18]	B
Waiting area	B
Isotope kitchen, general	E
Isotope kitchen, benches	E
Computerized radiotomography section	
Scanning room	B
Equipment maintenance room	E
Solarium	
General	C
Local for reading	D
Stairways	C
Surgical suite[17]	
Operating room, general[18]	F
Operating table	(see page 7-15)
Scrub room	F
Instruments and sterile supply room	D
Clean up room, instruments	E
Anesthesia	C
Substerilizing room	C
Surgical induction room[17, 18]	E
Surgical holding area[17, 18]	E
Toilets	C
Utility room	D
Waiting areas[17]	
General	C
Local for reading	D

Homes (see **Residences**)

Hospitality facilities
(see **Hotels, food service facilities**)

Hospitals (see **Health care facilities**)

Hotels

Bathrooms, for grooming	D
Bedrooms, for reading	D
Corridors, elevators and stairs	C
Front desk	E[3]
Linen room	
Sewing	F
General	C
Lobby	
General lighting	C
Reading and working areas	D
Canopy (see Part IV, Outdoor Facilities)	

Houses of worship (see page 7-5)

Kitchens (see **Food service facilities** or **Residences**)

Libraries
Reading areas (see **Reading**)

Fig. 2-1. *Continued*

II. *Continued*

Area/Activity	Illuminance Category
Book stacks [vertical 760 millimeters (30 inches) above floor]	
Active stacks	D
Inactive stacks	B
Book repair and binding	D
Cataloging	D[3]
Card files	E
Carrels, individual study areas (see **Reading**) Circulation desks	D
Map, picture and print rooms (see **Graphic design and material**)	
Audiovisual areas	D
Audio listening areas	D
Microform areas (see **Reading**)	
Locker rooms	C
Merchandising spaces	
Alteration room	F
Fitting room	
Dressing areas	D
Fitting areas	F
Locker rooms	C
Stock rooms, wrapping and packaging	D
Sales transaction area (see **Reading**)	
Circulating	(see page 8-7)[8]
Merchandise	(see page 8-7)[8]
Feature display	(see page 8-7)[8]
Show windows	(see page 8-7)[8]
Motels (see **Hotels**)	
Municipal buildings -- fire and police	
Police	
Identification records	F
Jail cells and interrogation rooms	D
Fire hall	D
Museums	
Displays of non-sensitive materials	D
Displays of sensitive materials	(see page 7-34)[2]
Lobbies, general gallery areas, corridors	C
Restoration or conservation shops and laboratories	E
Nursing homes (see **Health care facilities**)	
Offices	
Accounting (see **Reading**)	
Audio-visual areas	D
Conference areas (see **Conference rooms**)	
Drafting (see **Drafting**)	
General and private offices (see **Reading**)	
Libraries (see **Libraries**)	
Lobbies, lounges and reception areas	C
Mail sorting	E
Off-set printing and duplicating area	D
Spaces with VDTs	(see page 5-13)
Parking facilities	(see page 14-28)
Post offices (see **Offices**)	
Reading	
Copied tasks	
Ditto copy	E[3]
Micro-fiche reader	B[12, 13]
Mimeograph	D
Photograph, moderate detail	E[13]
Thermal copy, poor copy	F[3]
Xerography	D
Xerography, 3rd generation and greater	E
Electronic data processing tasks	
CRT screens	B[12, 13]
Impact printer	
good ribbon	D
poor ribbon	E
2nd carbon and greater	E
Ink jet printer	D
Keyboard reading	D
Machine rooms	
Active operations	D
Tape storage	D
Machine area	C
Equipment service	E[10]
Thermal print	E
Handwritten tasks	
#2 pencil and softer leads	D[3]
#3 pencil	E[3]
#4 pencil and harder leads	F[3]
Ball-point pen	D[3]
Felt-tip pen	D
Handwritten carbon copies	E
Non photographically reproducible colors	F
Chalkboards	E[3]
Printed tasks	
6 point type	E[3]
8 and 10 point type	D[3]
Glossy magazines	D[13]
Maps	E
Newsprint	D
Typed originals	D
Typed 2nd carbon and later	E
Telephone books	E
Residences	
General lighting	
Conversation, relaxation and entertainment	B
Passage areas	B
Specific visual tasks[20]	
Dining	C
Grooming	
Makeup and shaving	D
Full-length mirror	D

Fig. 2-1. *Continued*

II. *Continued*

Area/Activity	Illuminance Category
Handcrafts and hobbies	
Workbench hobbies	
Ordinary tasks	D
Difficult tasks	E
Critical tasks	F
Easel hobbies	E
Ironing	D
Kitchen duties	
Kitchen counter	
Critical seeing	E
Noncritical	D
Kitchen range	
Difficult seeing	E
Noncritical	D
Kitchen sink	
Difficult seeing	E
Noncritical	D
Laundry	
Preparation and tubs	D
Washer and dryer	D
Music study (piano or organ)	
Simple scores	D
Advanced scores	E
Substandard size scores	F
Reading	
In a chair	
Books, magazines and newspapers	D
Handwriting, reproductions and poor copies	E
In bed	
Normal	D
Prolonged serious or critical	E
Desk	
Primary task plane, casual	D
Primary task plane, study	E
Sewing	
Hand sewing	
Dark fabrics, low contrast	F
Light to medium fabrics	E
Occasional, high contrast	D
Machine sewing	
Dark fabrics, low contrast	F
Light to medium fabrics	E
Occasional, high contrast	D
Table games	D

Area/Activity	Illuminance Category
Restaurants (see **Food service facilities**)	
Safety	(see page 2-45)
Schools (see **Educational facilities**)	
Service spaces (see also **Storage rooms**)	
Stairways, corridors	C
Elevators, freight and passenger	C
Toilet and washroom	C
Service stations	
Service bays (see Part III, Industrial Group)	
Sales room (see **Merchandising spaces**)	
Show windows	(see page 8-7)
Stairways (see **Service spaces**)	
Storage rooms (see Part III, Industrial Group)	
Stores (see **Merchandising spaces** and **Show windows**)	
Television	(see Section 11)
Theater and motion picture houses	(see Section 11)
Toilets and washrooms	C
Transportation terminals	
Waiting room and lounge	C
Ticket counters	E
Baggage checking	D
Rest rooms	C
Concourse	B
Boarding area	C

[1]Include provisions for higher levels for exhibitions.
[2]Specific limits are provided to minimize deterioration effects.
[3]Task subject to veiling reflections. Illuminance listed is not an Equivalent Sphere Illumination (ESI) value. Currently, insufficient experience in the use of ESI target values precludes the direct use of ESI in the present consensus approach to recommend illuminance values. ESI may be used as a tool in determining the effectiveness of controlling veiling reflections and as a part of the evaluation of lighting systems.
[4]Illuminance values are listed based on experience and consensus. Values relate to needs during various religious ceremonies.
[5]Degradation factors: Overlays -- add 2 weighting factor for each overlay; Used material -- estimate additional factors.
[6]Provide higher level over food service or selection areas.
[7]Supplementary illumination as in delivery room must be available.
8Illuminance values developed for various degrees of store area activity.
[9]Or not less than 1/5 the level in the adjacent areas.
[10]Only when actual equipment service is in process. May be achieved by a general lighting system or by localized or portable equipment.
[11]For color matching, the spectral quality of the color of the light source is important.
[12]Veiling reflections may be produced on glass surfaces. It may be necessary to treat plus weighting factors as minus in order to obtain proper illuminance.
[13]Especially subject to veiling reflections. It may be necessary to shield the task or to reorient it.
[14]Vertical
[15]Illuminance values may vary widely, depending upon the effect desired, the decorative scheme, and the use made of the room.
[16]Supplementary lighting should be provided in this space to produce the higher levels required for specific seeing tasks involved.
[17]Good to high color rendering capability should be considered in these areas. As lamps of higher luminous efficacy and higher color rendering capability become available and economically feasible, they should be applied in all areas of health care facilities.
[18]Variable (dimming or switching).
[19]Values based on a 25 percent reflectance, which is average for vegetation and typical outdoor surfaces. These figures must be adjusted to specific reflectances of materials lighted for equivalent brightness. Levels give satisfactory brightness patterns when viewed from dimly lighted terraces or interiors. When viewed from dark areas they may be reduced by at least 1/2; or they may be doubled when a high key is desired.
[20]General lighting should not be less than 1/3 of visual task illuminance nor less than 200 lux [20 footcandles].
[21]Industry representatives have established a table of single illuminance values which, in their opinion, can be used in preference to employing reference 6. Illuminance values for specific operations can also be determined using illuminance categories of similar tasks and activities found in this table and the application of the appropriate weighting factors in Fig. 2-3.
[22]Special lighting such that (1) the luminous area is large enough to cover the surface, which is being inspected and (2) the luminance is within the limits necessary to obtain comfortable contrast conditions. This involves the use of sources of large area and relatively low luminance in which the source luminance is the principal factor rather than the illuminance produced at a given point.
[23]Maximum levels -- controlled system.
[24]Additional lighting needs to be provided for maintenance only.
[25]Color temperature of the light source is important for color matching.
[26] Select upper level for high speed conveyor systems. For grading redwood lumber 3000 lux [300 footcandles] is required.
[27]Higher levels from local lighting may be required for manually operated cutting machines.
[28]If color matching is critical, use illuminance category G.

LUMINAIRE POWER

Table B-101

Lamp		Ballast			Watts/	
No.	Designation	No.	Abbreviation	Description	Luminaire	Comments
Fluorescent Circline						
Fluorescent Circline, Rapid Start (22 W)						
1	FC8T9	1	MAG STD	Magnetic Standard	27	8" OD
Fluorescent Circline, Rapid Start (32 W)						
1	FC12T9	1	MAG STD	Magnetic Standard	45	12" OD
Fluorescent Circline, Rapid Start (40 W)						
1	FC16T9	1	MAG STD	Magnetic Standard	57	16" OD
Fluorescent 2D						
Compact Fluorescent 2D (10W, GR10q-4 Four Pin Base)						
1	CFS10W/GR10q	1	MAG STD	Magnetic Standard	16	3.6" across
1	CFS10W/GR10q	1	ELECT	Electronic	13	
2	CFS10W/GR10q	1	ELECT	Electronic	26	
Compact Fluorescent 2D (16W, GR10q-4 Four Pin Base)						
1	CFS16W/GR10q	1	MAG STD	Magnetic Standard	23	5.5" across
1	CFS16W/GR10q	1	ELECT	Electronic	15	
2	CFS16W/GR10q	1	ELECT	Electronic	30	
Compact Fluorescent 2D (21W, GR10q-4 Four Pin Base)						
1	CFS21W/GR10q	1	MAG STD	Magnetic Standard	31	5.5" across
1	CFS21W/GR10q	1	ELECT	Electronic	21	
2	CFS21W/GR10q	1	ELECT	Electronic	42	
Compact Fluorescent 2D (28W, GR10q-4 Four Pin Base)						
1	CFS28W/GR10q	1	MAG STD	Magnetic Standard	38	8.1" across
1	CFS28W/GR10q	1	ELECT	Electronic	28	
2	CFS28W/GR10q	1	ELECT	Electronic	56	
Compact Fluorescent 2D (38W, GR10q-4 Four Pin Base)						
1	CFS38W/GR10q	1	ELECT	Electronic	37	8.1" across
2	CFS38W/GR10q	1	ELECT	Electronic	74	
Compact Fluorescent Twin (5 W, G23 Two Pin Base - F5TT Lamp)						
1	CFT5W/G23	1	MAG STD	Magnetic Standard	9	4.1" MOL
2	CFT5W/G23	2	MAG STD	Magnetic Standard	18	
Compact Fluorescent Twin (7 W, G23 Two Pin Base - F7TT Lamp)						
1	CFT7W/G23	1	MAG STD	Magnetic Standard	11	5.3" MOL
2	CFT7W/G23	2	MAG STD	Magnetic Standard	22	

LUMINAIRE POWER

Table B-101

Lamp		Ballast			Watts/	
No.	Designation	No.	Abbreviation	Description	Luminaire	Comments
Compact Fluorescent Twin (9 W, G23 Two Pin Base - F9TT Lamp)						
1	CFT9W/G23	1	MAG STD	Magnetic Standard	13	6.5" MOL
2	CFT9W/G23	2	MAG STD	Magnetic Standard	26	
Compact Fluorescent Twin (13 W, GX23 Two Pin Base - F13TT)						
1	CFT13W/GX23	1	MAG STD	Magnetic Standard	17	7.5" MOL
2	CFT13W/GX23	2	MAG STD	Magnetic Standard	34	
Compact Fluorescent Quad (9 W, G23-2 Two Pin Base - F9DTT Lamp)						
1	CFQ9W/G23-2	1	MAG STD 120	120 V Magnetic Standard	13	4.4" MOL
2	CFQ9W/G23-2	2	MAG STD 120	120 V Magnetic Standard	26	
Compact Fluorescent Quad (13 W, G24d-1 Two Pin Base - F13DTT Lamp)						
1	CFQ13W/G24d-1	1	MAG STD 120	120 V Magnetic Standard	18	6.0" MOL
2	CFQ13W/G24d-1	2	MAG STD 120	120 V Magnetic Standard	36	
1	CFQ13W/G24d-1	1	MAG STD 277	227 V Magnetic Standard	16	
2	CFQ13W/G24d-1	2	MAG STD 277	227 V Magnetic Standard	32	
Compact Fluorescent Quad (13 W, GX23-2 Two Pin Base)						
1	CFQ13W/GX23-2	1	MAG STD	Magnetic Standard	17	4.8" MOL
2	CFQ13W/GX23-2	2	MAG STD	Magnetic Standard	34	
Compact Fluorescent Quad (16W GX32d-1 Two Pin Base)						
1	CFQ16W/GX32d-1	1	MAG STD	Magnetic Standard	20	5.5" MOL
2	CFQ16W/GX32d-1	2	MAG STD	Magnetic Standard	40	
Compact Fluorescent Quad (18 W, G24d-2 Two Pin Base - F18DTT Lamp)						
1	CFQ18W/G24d-2	1	MAG STD 120	120 V Magnetic Standard	25	6.8" MOL
2	CFQ18W/G24d-2	2	MAG STD 120	120 V Magnetic Standard	50	
1	CFQ18W/G24d-2	1	MAG STD 277	227 V Magnetic Standard	22	
2	CFQ18W/G24d-2	2	MAG STD 277	227 V Magnetic Standard	44	
Compact Fluorescent Quad (22W, GX32d Two Pin Base)						
1	CFQ22W/GX32d-2	1	MAG STD	Magnetic Standard	27	6.0" MOL
2	CFQ22W/GX32d-2	2	MAG STD	Magnetic Standard	54	
Compact Fluorescent Quad (26 W, G24d-3 Two Pin Base - F26DTT Lamp)						
1	CFQ26W/G24d-3	1	MAG STD 120	120 V Magnetic Standard	37	7.6" MOL
2	CFQ26W/G24d-3	2	MAG STD 120	120 V Magnetic Standard	74	
1	CFQ26W/G24d-3	1	MAG STD 277	227 V Magnetic Standard	33	
2	CFQ26W/G24d-3	2	MAG STD 277	227 V Magnetic Standard	66	
1	CFQ26W/G24d-3	1	ELECT 277V	277 V Electronic	27	
2	CFQ26W/G24d-3	2	ELECT 277V	277 V Electronic	54	

LUMINAIRE POWER

Table B-101

Lamp		Ballast			Watts/	
No.	Designation	No.	Abbreviation	Description	Luminaire	Comments
Compact Fluorescent Quad (28W GX32d Two Pin Base)						
1	CFQ28W/GX32d-3	1	MAG STD	Magnetic Standard	34	6.8" MOL
2	CFQ28W/GX32d-3	2	MAG STD	Magnetic Standard	68	
Compact Fluorescent Quad (10 W, G24q-1 Four Pin Base)						
1	CFQ10W/G24q-1	1	MAG STD 120	120 V Magnetic Standard	16	4.6" MOL
2	CFQ10W/G24q-1	2	MAG STD 120	120 V Magnetic Standard	32	
1	CFQ10W/G24q-1	1	MAG STD 277	227 V Magnetic Standard	13	
2	CFQ10W/G24q-1	2	MAG STD 277	227 V Magnetic Standard	26	
Compact Fluorescent Quad (13 W, G24q-1 Four Pin Base)						
1	CFQ13W/G24q-1	1	MAG STD 120	120 V Magnetic Standard	18	6.0" MOL
2	CFQ13W/G24q-1	2	MAG STD 120	120 V Magnetic Standard	36	
1	CFQ13W/G24q-1	1	MAG STD 277	227 V Magnetic Standard	16	
2	CFQ13W/G24q-1	2	MAG STD 277	227 V Magnetic Standard	32	
Compact Fluorescent Quad (13 W, GX7 Four Pin Base)						
1	CFQ13W/GX7	1	MAG STD	Magnetic Standard	17	4.8" MOL
2	CFQ13W/GX7	2	MAG STD	Magnetic Standard	34	
Compact Fluorescent Quad (18 W, G24q-2 Four Pin Base)						
1	CFQ18W/G24q-2	1	MAG STD 120	120 V Magnetic Standard	25	6.8" MOL
2	CFQ18W/G24q-2	2	MAG STD 120	120 V Magnetic Standard	50	
1	CFQ18W/G24q-2	1	MAG STD 277	227 V Magnetic Standard	22	
2	CFQ18W/G24q-2	2	MAG STD 277	227 V Magnetic Standard	44	
Compact Fluorescent Triple (13 W, GX24q-1 Four Pin Base)						
1	CFM 13W/GX24q-1	1	MAG STD	Magnetic Standard	18	4.2" MOL
2	CFM 13W/GX24q-1	2	MAG STD	Magnetic Standard	36	
Compact Fluorescent Triple (18W, GX24q-2 Four Pin Base)						
1	CFM 18W/GX24q-2	1	MAG STD	Magnetic Standard	25	5.0" MOL
2	CFM 18W/GX24q-2	2	MAG STD	Magnetic Standard	50	
Compact Fluorescent Triple (26W, GX24q-3 Four Pin Base)						
1	CFM 26W/GX24q-3	1	MAG STD	Magnetic Standard	37	4.9 to 5.4" MOL
2	CFM 26W/GX24q-3	2	MAG STD	Magnetic Standard	74	

LUMINAIRE POWER

Table B-101

Lamp		Ballast			Watts/	
No.	Designation	No.	Abbreviation	Description	Luminaire	Comments
Fluorescent Twin (18W - F18TT Lamp)						
1	FT18W/2G11	1	MAG EE	Magnetic Energy Efficient	23	
2	FT18W/2G11	1	MAG EE	Magnetic Energy Efficient	46	
3	FT18W/2G11	1.5	MAG EE	Magnetic Energy Efficient	69	Tandem wired
3	FT18W/2G11	2	MAG EE	Magnetic Energy Efficient	69	
4	FT18W/2G11	2	MAG EE	Magnetic Energy Efficient	92	(2) Two-lamp ballasts
1	FT18W/2G11	1	ELECT	Electronic	17	
2	FT18W/2G11	1	ELECT	Electronic	35	
3	FT18W/2G11	1.5	ELECT	Electronic	52	Tandem wired
3	FT18W/2G11	2	ELECT	Electronic	52	
4	FT18W/2G11	2	ELECT	Electronic	70	(2) Two-lamp ballasts
Fluorescent Twin (24-27W- F24TT or F27TT Lamp)						
1	FT24W/2G11	1	MAG EE	Magnetic Energy Efficient	32	
2	FT24W/2G11	1	MAG EE	Magnetic Energy Efficient	66	
3	FT24W/2G11	1.5	MAG EE	Magnetic Energy Efficient	99	Tandem wired
3	FT24W/2G11	2	MAG EE	Magnetic Energy Efficient	98	
4	FT24W/2G11	2	MAG EE	Magnetic Energy Efficient	132	(2) Two-lamp ballasts
1	FT24W/2G11	1	ELECT	Electronic	21	
2	FT24W/2G11	1	ELECT	Electronic	43	
3	FT24W/2G11	1.5	ELECT	Electronic	64	Tandem wired
3	FT24W/2G11	2	ELECT	Electronic	64	
4	FT24W/2G11	2	ELECT	Electronic	86	(2) Two-lamp ballasts
Fluorescent Twin (36-39W - F36TT or F39TT Lamp)						
1	FT36W/2G11	1	MAG EE	Magnetic Energy Efficient	51	
2	FT36W/2G11	1	MAG EE	Magnetic Energy Efficient	66	
3	FT36W/2G11	1.5	MAG EE	Magnetic Energy Efficient	99	Tandem wired
3	FT36W/2G11	2	MAG EE	Magnetic Energy Efficient	117	
4	FT36W/2G11	2	MAG EE	Magnetic Energy Efficient	132	(2) Two-lamp ballasts
1	FT36W/2G11	1	ELECT	Electronic	37	
2	FT36W/2G11	1	ELECT	Electronic	70	
3	FT36W/2G11	1.5	ELECT	Electronic	105	Tandem wired
3	FT36W/2G11	2	ELECT	Electronic	107	
4	FT36W/2G11	2	ELECT	Electronic	140	(2) Two-lamp ballasts

LUMINAIRE LUMIN.

Table B-101

Lamp		Ballast			Watts/	
No.	Designation	No.	Abbreviation	Description	Luminaire	Comments
Fluorescent Twin (40 W - F40TT Lamp)						
1	FT40W/2G11	1	MAG EE	Magnetic Energy Efficient	43	
2	FT40W/2G11	1	MAG EE	Magnetic Energy Efficient	86	
3	FT40W/2G11	1.5	MAG EE	Magnetic Energy Efficient	129	Tandem wired
3	FT40W/2G11	2	MAG EE	Magnetic Energy Efficient	130	
4	FT40W/2G11	2	MAG EE	Magnetic Energy Efficient	172	(2) Two-lamp ballasts
1	FT40W/2G11	1	ELECT	Electronic	36	
2	FT40W/2G11	1	ELECT	Electronic	71	
2	FT40W/2G11	1	ELECT	Electronic	70	
3	FT40W/2G11	1	ELECT	Electronic	98	
3	FT40W/2G11	1.5	ELECT	Electronic	106	Tandem wired
3	FT40W/2G11	2	ELECT	Electronic	107	
4	FT40W/2G11	2	ELECT	Electronic	142	(2) Two-lamp ballasts
2	FT40W/2G11	1	ELECT RO	Elec. Reduce Output (75%)	59	
3	FT40W/2G11	1.5	ELECT DIM	Electronic Dimming (to 1%)	105	Tandem wired
4	FT40W/2G11	2	ELECT DIM	Electronic Dimming (to 1%)	140	(2) two-lamp ballasts
Fluorescent Twin (50 W - F50TT Lamp)						
1	FT50W/2G11	1	ELECT	Electronic	54	
2	FT50W/2G11	1	ELECT	Electronic	106	
3	FT50W/2G11	1	ELECT	Electronic	98	
3	FT50W/2G11	1.5	ELECT	Electronic	159	Tandem wired
3	FT50W/2G11	2	ELECT	Electronic	160	
4	FT50W/2G11	2	ELECT	Electronic	212	(2) Two-lamp ballasts
Fluorescent Twin (55 W - F55TT Lamp)						
1	FT55W/2G11	1	ELECT	Electronic	62	
2 ft. Fluorescent U-Tube Octic (32W - FBO31T8 Lamp)						
1	FB31T8	0.5	MAG EE	Magnetic Energy Efficient	35	Tandem wired
1	FB31T8	1	MAG EE	Magnetic Energy Efficient	36	
2	FB31T8	1	MAG EE	Magnetic Energy Efficient	69	
3	FB31T8	1.5	MAG EE	Magnetic Energy Efficient	104	Tandem wired
3	FB31T8	2	MAG EE	Magnetic Energy Efficient	105	

LUMINAIRE POWER

Table B-101

Lamp		Ballast			Watts/	
No.	Designation	No.	Abbreviation	Description	Luminaire	Comments
1	FB31T8	0.5	ELECT	Electronic	31	Tandem wired
1	FB31T8	1	ELECT	Electronic	39	
2	FB31T8	1	ELECT	Electronic	62	
3	FB31T8	1	ELECT	Electronic	92	
3	FB31T8	1.5	ELECT	Electronic	93	Tandem wired
3	FB31T8	2	ELECT	Electronic	101	
2	FB31T8	1	ELECT IS	Electronic Instant Start	61	
3	FB31T8	1	ELECT IS	Electronic Instant Start	88	
2 ft. Fluorescent U-Tube Energy-Saving (34W)						
1	FB40T12/ES	0.5	MAG EE	Magnetic Energy Efficient	36	Tandem wired
1	FB40T12/ES	1	MAG EE	Magnetic Energy Efficient	43	
2	FB40T12/ES	1	MAG EE	Magnetic Energy Efficient	72	
3	FB40T12/ES	1	MAG EE	Magnetic Energy Efficient	105	
3	FB40T12/ES	1.5	MAG EE	Magnetic Energy Efficient	108	Tandem wired
3	FB40T12/ES	2	MAG EE	Magnetic Energy Efficient	115	
1	FB40T12/ES	0.5	ELECT	Electronic	30	Tandem wired
1	FB40T12/ES	1	ELECT	Electronic	31	
2	FB40T12/ES	1	ELECT	Electronic	59	
3	FB40T12/ES	1	ELECT	Electronic	90	
3	FB40T12/ES	1.5	ELECT	Electronic	88	Tandem wired
3	FB40T12/ES	2	ELECT	Electronic	90	
2 ft. Fluorescent U-Tube Standard (40W - FB40T12 Lamp)						
1	FB40T12	0.5	MAG EE	Magnetic Energy Efficient	43	Tandem wired
1	FB40T12	1	MAG EE	Magnetic Energy Efficient	48	
2	FB40T12	1	MAG EE	Magnetic Energy Efficient	86	
3	FB40T12	1	MAG EE	Magnetic Energy Efficient	127	
3	FB40T12	1.5	MAG EE	Magnetic Energy Efficient	129	Tandem wired
3	FB40T12	2	MAG EE	Magnetic Energy Efficient	134	
1	FB40T12	0.5	ELECT	Electronic	35	Tandem wired
1	FB40T12	1	ELECT	Electronic	36	
2	FB40T12	1	ELECT	Electronic	67	
3	FB40T12	1	ELECT	Electronic	100	
3	FB40T12	1.5	ELECT	Electronic	101	Tandem wired
3	FB40T12	2	ELECT	Electronic	103	

LUMINAIRE POWER

Table B-101

Lamp		Ballast			Watts/	
No.	Designation	No.	Abbreviation	Description	Luminaire	Comments
Fluorescent Preheat T5 (4W)						
1	F4T5	1	MAG STD	Magnetic Standard	8	6" MOL
Fluorescent Preheat T5 (6W)						
1	F6T5	1	MAG STD	Magnetic Standard	10	9" MOL
Fluorescent Preheat T5 (8W)						
1	F8T5	1	MAG STD	Magnetic Standard	12	12" MOL
Fluorescent Preheat T8 (15W)						
1	F15T8	1	MAG STD	Magnetic Standard	19	18" MOL
Fluorescent Preheat T12 (15W)						
1	F15T12	1	MAG STD	Magnetic Standard	19	18" MOL
Fluorescent Preheat T12 (20W)						
1	F20T12	1	MAG STD	Magnetic Standard	25	24" MOL
2	F20T12	1	MAG STD	Magnetic Standard	50	24" MOL
Fluorescent Preheat T8 (30W)						
1	F30T8	1	MAG STD	Magnetic Standard	46	30" MOL
2	F30T8	1	MAG STD	Magnetic Standard	79	30" MOL
Fluorescent Preheat T12 (30W)						
1	F30T12	1	MAG STD	Magnetic Standard	46	30" MOL
2	F30T12	1	MAG STD	Magnetic Standard	79	30" MOL
2	F30T12	1	MAG EE	Magnetic Energy Efficient	74	30" MOL
1	F30T12	1	ELECT	Electronic	31	30" MOL
2	F30T12	2	ELECT	Electronic	63	30" MOL
2 foot Fluorescent Rapid Start T8 (17W)						
1	F17T8	1	MAG EE	Magnetic Energy Efficient	24	
2	F17T8	1	MAG EE	Magnetic Energy Efficient	45	
1	F17T8	1	ELECT	Electronic	22	
2	F17T8	1	ELECT	Electronic	33	
3	F17T8	1	ELECT	Electronic	53	
3	F17T8	2	ELECT	Electronic	55	
4	F17T8	1	ELECT	Electronic	63	
4	F17T8	2	ELECT	Electronic	66	(2) two-lamp ballasts

LUMINAIRE POWER

Table B-101

Lamp		Ballast			Watts/	
No.	Designation	No.	Abbreviation	Description	Luminaire	Comments
3 foot Fluorescent Rapid Start T8 (25W)						
1	F25T8	1	MAG EE	Magnetic Energy Efficient	33	
2	F25T8	1	MAG EE	Magnetic Energy Efficient	65	
1	F25T8	1	ELECT	Electronic	27	
2	F25T8	1	ELECT	Electronic	48	
3	F25T8	1	ELECT	Electronic	68	
3	F25T8	2	ELECT	Electronic	75	
4	F25T8	1	ELECT	Electronic	89	
4	F25T8	2	ELECT	Electronic	96	(2) two-lamp ballasts
4 foot Fluorescent Rapid Start Octic (32W)						
1	F32T8	0.5	MAG EE	Magnetic Energy Efficient	35	Tandem wired
1	F32T8	1	MAG EE	Magnetic Energy Efficient	39	
2	F32T8	1	MAG EE	Magnetic Energy Efficient	70	
3	F32T8	1.5	MAG EE	Magnetic Energy Efficient	105	Tandem wired
3	F32T8	2	MAG EE	Magnetic Energy Efficient	109	
4	F32T8	2	MAG EE	Magnetic Energy Efficient	140	(2) two-lamp ballasts
1	F32T8	0.5	ELECT	Electronic	31	Tandem wired
1	F32T8	1	ELECT	Electronic	32	
2	F32T8	1	ELECT	Electronic	62	
3	F32T8	1	ELECT	Electronic	93	
3	F32T8	1.5	ELECT	Electronic	93	Tandem wired
3	F32T8	2	ELECT	Electronic	94	
4	F32T8	1	ELECT	Electronic	114	
4	F32T8	2	ELECT	Electronic	124	(2) two-lamp ballasts
2	F32T8	1	ELECT IS	Electronic Instant Start	63	
3	F32T8	1	ELECT IS	Electronic Instant Start	96	
3	F32T8	1.5	ELECT IS	Electronic Instant Start	95	Tandem wired
4	F32T8	1	ELECT IS	Electronic Instant Start	124	
4	F32T8	2	ELECT IS	Electronic Instant Start	126	(2) two-lamp ballasts

LUMINAIRE POWER

Table B-101

Lamp		Ballast			Watts/	
No.	Designation	No.	Abbreviation	Description	Luminaire	Comments
4 foot Fluorescent Rapid Start Octic (32W) (cont.)						
2	F32T8	1	ELECT RO	Electronic Reduce Output (75%)	51	
3	F32T8	1	ELECT RO	Electronic Reduce Output (75%)	76	
3	F32T8	1.5	ELECT RO	Electronic Reduce Output (75%)	77	Tandem wired
4	F32T8	1	ELECT RO	Electronic Reduce Output (75%)	100	
4	F32T8	2	ELECT RO	Electronic Reduce Output (75%)	102	(2) two-lamp ballasts
2	F32T8	1	ELECT TL	Electronic Two Level (50 & 100%)	65	
3	F32T8	1.5	ELECT TL	Electronic Two Level (50 & 100%)	98	Tandem wired
4	F32T8	2	ELECT TL	Electronic Two Level (50 & 100%)	130	(2) two-lamp ballasts
2	F32T8	1	ELECT AO	Electronic Adjustable Output (to 15%)	73	
3	F32T8	1.5	ELECT AO	Electronic Adjustable Output (to 15%)	110	Tandem wired
4	F32T8	2	ELECT AO	Electronic Adjustable Output (to 15%)	146	(2) two-lamp ballasts
2	F32T8	1	ELECT DIM	Electronic Dimming (to 1%)	75	
3	F32T8	1.5	ELECT DIM	Electronic Dimming (to 1%)	113	Tandem wired
4	F32T8	2	ELECT DIM	Electronic Dimming (to 1%)	150	(2) two-lamp ballasts
5 foot Fluorescent Rapid Start (40W)						
1	F40T8	1	MAG EE	Magnetic Energy Efficient	50	
2	F40T8	1	MAG EE	Magnetic Energy Efficient	92	
1	F40T8	1	ELECT	Electronic	46	
2	F40T8	1	ELECT	Electronic	79	
3	F40T8	2	ELECT	Electronic	109	
3 foot Fluorescent Rapid Start Energy-Saving (25W)						
1	F30T12/ES	1	MAG STD	Magnetic Standard	42	
2	F30T12/ES	1	MAG STD	Magnetic Standard	74	
3	F30T12/ES	1.5	MAG STD	Magnetic Standard	111	Tandem wired
3	F30T12/ES	2	MAG STD	Magnetic Standard	116	
2	F30T12/ES	1	MAG EE	Magnetic Energy Efficient	66	
1	F30T12/ES	1	ELECT	Electronic	26	
2	F30T12/ES	1	ELECT	Electronic	53	

LUMINAIRE POWER

Table B-101

Lamp		Ballast			Watts/	
No.	Designation	No.	Abbreviation	Description	Luminaire	Comments
3 foot Fluorescent Rapid Start Standard (30W)						
1	F30T12	1	MAG STD	Magnetic Standard	46	
2	F30T12	1	MAG STD	Magnetic Standard	79	
3	F30T12	1.5	MAG STD	Magnetic Standard	118	Tandem wired
3	F30T12	2	MAG STD	Magnetic Standard	125	
4 foot Fluorescent Rapid Start Energy-Saving Plus (32W)						
1	F40T12/ES Plus	0.5	MAG EE	Magnetic Energy Efficient	34	Tandem wired
1	F40T12/ES Plus	1	MAG EE	Magnetic Energy Efficient	41	
2	F40T12/ES Plus	1	MAG EE	Magnetic Energy Efficient	68	
3	F40T12/ES Plus	1	MAG EE	Magnetic Energy Efficient	99	
3	F40T12/ES Plus	1.5	MAG EE	Magnetic Energy Efficient	102	Tandem wired
3	F40T12/ES Plus	2	MAG EE	Magnetic Energy Efficient	109	
4	F40T12/ES Plus	2	MAG EE	Magnetic Energy Efficient	136	(2) Two-lamp ballasts
4 foot Fluorescent Rapid Start Energy-Saving (34W)						
1	F40T12/ES	0.5	MAG STD**	Magnetic Standard	42	Tandem wired
1	F40T12/ES	1	MAG STD**	Magnetic Standard	48	
2	F40T12/ES	1	MAG STD**	Magnetic Standard	82	
3	F40T12/ES	1.5	MAG STD**	Magnetic Standard	122	Tandem wired
3	F40T12/ES	2	MAG STD**	Magnetic Standard	130	
4	F40T12/ES	2	MAG STD**	Magnetic Standard	164	(2) Two-lamp ballasts
1	F40T12/ES	0.5	MAG EE	Magnetic Energy Efficient	36	Tandem wired
1	F40T12/ES	1	MAG EE	Magnetic Energy Efficient	43	
2	F40T12/ES	1	MAG EE	Magnetic Energy Efficient	72	
3	F40T12/ES	1	MAG EE	Magnetic Energy Efficient	105	
3	F40T12/ES	1.5	MAG EE	Magnetic Energy Efficient	108	Tandem wired
3	F40T12/ES	2	MAG EE	Magnetic Energy Efficient	112	
4	F40T12/ES	2	MAG EE	Magnetic Energy Efficient	144	(2) Two-lamp ballasts
2	F40T12/ES	1	MAG HC	Magnetic Heater Cutout	58	
3	F40T12/ES	1.5	MAG HC	Magnetic Heater Cutout	87	Tandem wired
4	F40T12/ES	2	MAG HC	Magnetic Heater Cutout	116	(2) Two-lamp ballasts
2	F40T12/ES	1	MAG HC FO	Mag. Heater Cutout Full Light	66	
3	F40T12/ES	1.5	MAG HC FO	Mag. Heater Cutout Full Light	99	Tandem wired
4	F40T12/ES	2	MAG HC FO	Mag. Heater Cutout Full Light	132	(2) Two-lamp ballasts

LUMINAIRE POWER

Table B-101

Lamp		Ballast			Watts/	
No.	Designation	No.	Abbreviation	Description	Luminaire	Comments
4 foot Fluorescent Rapid Start Energy-Saving (34W) (cont.)						
1	F40T12/ES	0.5	ELECT	Electronic	30	Tandem wired
1	F40T12/ES	1	ELECT	Electronic	31	
2	F40T12/ES	1	ELECT	Electronic	62	
3	F40T12/ES	1	ELECT	Electronic	90	
3	F40T12/ES	1.5	ELECT	Electronic	93	Tandem wired
3	F40T12/ES	2	ELECT	Electronic	93	
4	F40T12/ES	1	ELECT	Electronic	121	
4	F40T12/ES	2	ELECT	Electronic	124	(2) Two-lamp ballasts
2	F40T12/ES	1	ELECT AO	Elec. Adjustable Output (to 15%)	60	
3	F40T12/ES	1.5	ELECT AO	Elec. Adjustable Output (to 15%)	90	Tandem wired
4	F40T12/ES	2	ELECT AO	Elec. Adjustable Output (to 15%)	120	(2) Two-lamp ballasts
4 foot Fluorescent Rapid Start Standard (40W)						
1	F40T12	0.5	MAG STD**	Magnetic Standard	26	Tandem wired
1	F40T12	1	MAG STD**	Magnetic Standard	52	
2	F40T12	1	MAG STD**	Magnetic Standard	96	
3	F40T12	1.5	MAG STD**	Magnetic Standard	144	Tandem wired
3	F40T12	2	MAG STD**	Magnetic Standard	148	
4	F40T12	2	MAG STD**	Magnetic Standard	192	(2) Two-lamp ballasts
1	F40T12	0.5	MAG EE	Magnetic Energy Efficient	44	Tandem wired
1	F40T12	1	MAG EE	Magnetic Energy Efficient	46	
2	F40T12	1	MAG EE	Magnetic Energy Efficient	88	
3	F40T12	1	MAG EE	Magnetic Energy Efficient	127	
3	F40T12	1.5	MAG EE	Magnetic Energy Efficient	132	Tandem wired
3	F40T12	2	MAG EE	Magnetic Energy Efficient	134	
4	F40T12	2	MAG EE	Magnetic Energy Efficient	176	(2) Two-lamp ballasts
2	F40T12	1	MAG HC	Magnetic Heater Cutout	71	
3	F40T12	1.5	MAG HC	Magnetic Heater Cutout	107	Tandem wired
4	F40T12	2	MAG HC	Magnetic Heater Cutout	142	(2) Two-lamp ballasts

LUMINAIRE POWER

Table B-101

Lamp		Ballast			Watts/	
No.	Designation	No.	Abbreviation	Description	Luminaire	Comments
4 foot Fluorescent Rapid Start Standard (40W) (cont.)						
2	F40T12	1	MAG HC FO	Magnetic Heater Cutout Full Light	80	
3	F40T12	1.5	MAG HC FO	Magnetic Heater Cutout Full Light	120	Tandem wired
4	F40T12	2	MAG HC FO	Magnetic Heater Cutout Full Light	160	(2) Two-lamp ballasts
1	F40T12	0.5	ELECT	Electronic	36	Tandem wired
1	F40T12	1	ELECT	Electronic	37	
2	F40T12	1	ELECT	Electronic	72	
3	F40T12	1	ELECT	Electronic	107	
3	F40T12	1.5	ELECT	Electronic	108	Tandem wired
3	F40T12	2	ELECT	Electronic	109	
4	F40T12	1	ELECT	Electronic	135	
4	F40T12	2	ELECT	Electronic	144	(2) Two-lamp ballasts
2	F40T12	1	ELECT RO	Electronic Reduce Output (75%)	61	
3	F40T12	1	ELECT RO	Electronic Reduce Output (75%)	90	
3	F40T12	1.5	ELECT RO	Electronic Reduce Output (75%)	92	Tandem wired
4	F40T12	2	ELECT RO	Electronic Reduce Output (75%)	122	(2) Two-lamp ballasts
2	F40T12	1	ELECT TL	Elec. Two Level (50 & 100%)	69	
3	F40T12	1.5	ELECT TL	Elec. Two Level (50 & 100%)	104	Tandem wired
4	F40T12	2	ELECT TL	Elec. Two Level (50 & 100%)	138	(2) Two-lamp ballasts
2	F40T12	1	ELECT AO	Elec. Adjustable Output (to 15%)	73	
3	F40T12	1.5	ELECT AO	Elec. Adjustable Output (to 15%)	110	Tandem wired
4	F40T12	2	ELECT AO	Elec. Adjustable Output (to 15%)	146	(2) Two-lamp ballasts
2	F40T12	1	ELECT DIM	Electronic Dimming (to 1%)	83	
3	F40T12	1.5	ELECT DIM	Electronic Dimming (to 1%)	125	Tandem wired
4	F40T12	2	ELECT DIM	Electronic Dimming (to 1%)	166	(2) Two-lamp ballasts

LUMINAIRE POWER

Table B-101

Lamp		Ballast			Watts/	
No.	Designation	No.	Abbreviation	Description	Luminaire	Comments
4 foot Fluorescent Rapid Start Extended Output (42W)						
2	F40T10/EO	1	MAG EE	Magnetic Energy Efficient	92	
3	F40T10/EO	1.5	MAG EE	Magnetic Energy Efficient	138	Tandem wired
4	F40T10/EO	2	MAG EE	Magnetic Energy Efficient	184	(2) Two-lamp ballasts
2	F40T10/EO	1	MAG HC	Magnetic Heater Cutout	74	
3	F40T10/EO	1.5	MAG HC	Magnetic Heater Cutout	111	Tandem wired
4	F40T10/EO	2	MAG HC	Magnetic Heater Cutout	148	(2) Two-lamp ballasts
2	F40T10/EO	1	ELECT	Electronic	74	
3	F40T10/EO	1.5	ELECT	Electronic	111	Tandem wired
4	F40T10/EO	2	ELECT	Electronic	148	(2) Two-lamp ballasts
2	F40T10/EO	1	ELECT RO	Electronic Reduce Output (75%)	63	
3	F40T10/EO	1.5	ELECT RO	Electronic Reduce Output (75%)	95	Tandem wired
4	F40T10/EO	2	ELECT RO	Electronic Reduce Output (75%)	126	(2) Two-lamp ballasts
2	F40T10/EO	1	ELECT TL	Elec. Two Level (50 & 100%)	72	
3	F40T10/EO	1.5	ELECT TL	Elec. Two Level (50 & 100%)	108	Tandem wired
4	F40T10/EO	2	ELECT TL	Elec. Two Level (50 & 100%)	144	(2) Two-lamp ballasts
2	F40T10/EO	1	ELECT AO	Elec. Adjustable Output (to 15%)	73	
3	F40T10/EO	1.5	ELECT AO	Elec. Adjustable Output (to 15%)	110	Tandem wired
4	F40T10/EO	2	ELECT AO	Elec. Adjustable Output (to 15%)	146	(2) Two-lamp ballasts
2	F40T10/EO	1	ELECT DIM	Electronic Dimming (to 1%)	85	
3	F40T10/EO	1.5	ELECT DIM	Electronic Dimming (to 1%)	128	Tandem wired
4	F40T10/EO	2	ELECT DIM	Electronic Dimming (to 1%)	170	(2) Two-lamp ballasts

LUMINAIRE POWER

Table B-101

Lamp		Ballast			Watts/	
No.	Designation	No.	Abbreviation	Description	Luminaire	Comments
8 foot Fluorescent Rapid Start High Output Energy-Saving (86W)						
2	F96T8/HO	1	ELECT	Electronic	160	
8 foot Fluorescent Rapid Start High Output Energy-Saving (95W)						
1	F96T12/HO/ES	1	MAG STD	Magnetic Standard	125	
2	F96T12/HO/ES	1	MAG STD**	Magnetic Standard	227	
2	F96T12/HO/ES	1	MAG EE	Magnetic Energy Efficient	208	
4	F96T12/HO/ES	2	MAG EE	Magnetic Energy Efficient	416	(2) Two-lamp ballasts
2	F96T12/HO/ES	1	ELECT	Electronic	160	
4	F96T12/HO/ES	2	ELECT	Electronic	320	(2) Two-lamp ballasts
8 foot Fluorescent Rapid Start High Output (110W)						
1	F96T12/HO	1	MAG STD	Magnetic Standard	140	
2	F96T12/HO	1	MAG STD**	Magnetic Standard	252	
2	F96T12/HO	1	MAG EE	Magnetic Energy Efficient	237	
4	F96T12/HO	2	MAG EE	Magnetic Energy Efficient	474	(2) Two-lamp ballasts
2	F96T12/HO	1	ELECT	Electronic	190	
4	F96T12/HO	2	ELECT	Electronic	380	(2) Two-lamp ballasts
8 foot Fluorescent Rapid Start Very High Output Energy-Saving (195W)						
1	F96T12/VHO/ES	1	MAG STD	Magnetic Standard	200	
2	F96T12/VHO/ES	1	MAG STD	Magnetic Standard	325	
4	F96T12/VHO/ES	2	MAG STD	Magnetic Standard	650	(2) Two-lamp ballasts
8 foot Fluorescent Rapid Start Very High Output (215W)						
1	F96T12/VHO	1	MAG STD	Magnetic Standard	230	
2	F96T12/VHO	1	MAG STD	Magnetic Standard	440	
4	F96T12/VHO	2	MAG STD	Magnetic Standard	880	

LUMINAIRE POWER

Table B-101

Lamp		Ballast			Watts/	
No.	Designation	No.	Abbreviation	Description	Luminaire	Comments
4 foot Fluorescent Slimline Energy-Saving T12 (32W)						
1	F48T12/ES	1	MAG STD	Magnetic Standard	51	
2	F48T12/ES	1	MAG STD	Magnetic Standard	82	
4 foot Fluorescent Slimline Standard T12 (39W)						
1	F48T12	1	MAG STD	Magnetic Standard	59	
2	F48T12	1	MAG STD	Magnetic Standard	98	
8 foot Fluorescent Instant Start T8 (Slimline with Rare Earth Phosphors)						
1	F96T8	1	ELECT	Electronic	71	
2	F96T8	1	ELECT	Electronic	115	
8 foot Fluorescent Slimline Energy-Saving (60W)						
1	F96T12/ES	1	MAG STD	Magnetic Standard	83	
2	F96T12/ES	1	MAG STD**	Magnetic Standard	138	
2	F96T12/ES	1	MAG EE	Magnetic Energy Efficient	123	
4	F96T12/ES	2	MAG EE	Magnetic Energy Efficient	246	(2) Two-lamp ballasts
2	F96T12/ES	1	ELECT	Electronic	105	
4	F96T12/ES	2	ELECT	Electronic	210	(2) Two-lamp ballasts
8 foot Fluorescent Slimline Standard (75W)						
1	F96T12	1	MAG STD	Magnetic Standard	100	
2	F96T12	1	MAG STD**	Magnetic Standard	173	
2	F96T12	1	MAG EE	Magnetic Energy Efficient	158	
4	F96T12	2	MAG EE	Magnetic Energy Efficient	316	(2) Two-lamp ballasts
2	F96T12	1	ELECT	Electronic	130	
4	F96T12	2	ELECT	Electronic	260	(2) Two-lamp ballasts
2	F96T12	1	ELECT IS	Electronic Instant Start	130	
3	F96T12	1.5	ELECT IS	Electronic Instant Start	195	Tandem wired
4	F96T12	2	ELECT IS	Electronic Instant Start	260	(2) Two-lamp ballasts

LUMINAIRE POWER

Table B-101

Lamp		Ballast			Watts/	
No.	Designation	No.	Abbreviation	Description	Luminaire	Comments
Mercury Vapor						
1	MV40	1	MAG STD	Magnetic Standard	51	
1	MV50	1	MAG STD	Magnetic Standard	63	
1	MV75	1	MAG STD	Magnetic Standard	88	
1	MV100	1	MAG STD	Magnetic Standard	119	
1	MV175	1	MAG STD	Magnetic Standard	197	
1	MV250	1	MAG STD	Magnetic Standard	285	
1	MV400	1	MAG STD	Magnetic Standard	450	
1	MV1000	1	MAG STD	Magnetic Standard	1080	
Metal Halide						
1	MH32	1	MAG STD	Magnetic Standard	42	
1	MH70	1	MAG STD	Magnetic Standard	95	
1	MH100	1	MAG STD	Magnetic Standard	142	
1	MH175	1	MAG STD	Magnetic Standard	210	
1	MH250	1	MAG STD	Magnetic Standard	295	
1	MH400	1	MAG STD	Magnetic Standard	461	
1	MH1000	1	MAG STD	Magnetic Standard	1080	
High Pressure Sodium						
1	HPS35	1	MAG STD	Magnetic Standard	44	
1	HPS50	1	MAG STD	Magnetic Standard	61	
1	HPS70	1	MAG STD	Magnetic Standard	93	
1	HPS100	1	MAG STD	Magnetic Standard	116	
1	HPS150	1	MAG STD	Magnetic Standard	173	
1	HPS200	1	MAG STD	Magnetic Standard	240	
1	HPS250	1	MAG STD	Magnetic Standard	302	
1	HPS400	1	MAG STD	Magnetic Standard	469	
1	HPS1000	1	MAG STD	Magnetic Standard	1090	
Low Pressure Sodium						
1	LPS18	1	MAG STD	Magnetic Standard	30	
1	LPS35	1	MAG STD	Magnetic Standard	60	
1	LPS55	1	MAG STD	Magnetic Standard	80	
1	LPS90	1	MAG STD	Magnetic Standard	125	
1	LPS135	1	MAG STD	Magnetic Standard	178	
1	LPS180	1	MAG STD	Magnetic Standard	220	

LUMINAIRE POWER

Table B-101

Lamp		Ballast			Watts/	
No.	Designation	No.	Abbreviation	Description	Luminaire	Comments
12 Volt Tungsten Halogen, MR 16 & Electronic Transformer						
1	Q20MR16(12V)	1	ELECT	Electronic	23	
1	Q35MR16(12V)	1	ELECT	Electronic	39	
1	Q50MR16(12V)	1	ELECT	Electronic	55	
1	Q70MR16(12V)	1	ELECT	Electronic	78	

*** US Energy Policy Act of 1992 affect on lamps**
Beginning in April 1994, many common wattage lamp types can no longer be manufactured or imported into the U.S. Federal Energy Legislation has decreed that these lamp types must be eliminated to reduce energy consumption. Lamp Types affected include the following fluorescent lamps:

Fluorescent Lamps	F40U/3 Cool White	F96T12/ W
F40 CW	F40U/3 Warm White	F96T12/ WW
F40 D	F40U/6 Cool White	F96T12/ WWX
F40 D/WM	F40U/6 Warm White Deluxe	F96T12/ WWX/WM
F40 W	F40U/6 Warm White	F96T12/ HO/D
F40 WW	F96T12/ CW	F96T12/ HO/CW
F40 WWX	F96T12/ D	F96T12/ HO/W
F40 WWX/WM	F96T12/ D/WM	F96T12/ HO/WW

Incandescent PAR Lamps		Inc. Reflector Lamps	
75PAR38	150PAR38	75R40	200R40
75/65PAR38	150/120PAR38	75R30	
100/80PAR38		150R40	
100 PAR38		100R40	

**** US National Appliance Energy Conservation Act of 1988 affect on ballasts**
In 1991 using the following Standard Magnetic ballasts was not permitted in the US.

-Single and two-lamp ballasts for 4' T12 Rapid Start Lamps, 120V & 277V 60Hz
-Two-lamp ballasts for 8' T-12 Slimline lamps
-Two-lamp ballasts for 8' T12 high-output rapid start lamps

Appendix C:

Reference Weather/Climate Data

Appendix C: Reference Weather/Climate Data

Appendix C: Reference Weather/Climate Data

C.1 Weather Data - General

All energy budget calculations for compliance runs use a form of the weather data in the Commission's official sixteen (16) climate zone hourly weather files. The reference method uses a form of this data that is adjusted for local ASHRAE design data extremes. These files are available from the Commission in the WYEC2 (Weather Year for Energy Calculations) format recognized by ASHRAE and in DOE 2.1E packed weather data format. The reference method computer program for adjusting the climate zone weather data for local ASHRAE design data is also available from the Commission. Temperatures in the WYEC2 files for the sixteen climate zones have been adjusted to the average means and extremes of the weather data of the reliable substations in each climate zone. See *Climate Zone Weather Data Analysis and Revision Project*, Final Consultant Report, CEC Publication # P400-92-004, for more detail.

The WYEC2 data may be adjusted for local conditions, condensed, statistically summarized or otherwise reduced, as long as:

a) The weather data used to derive the simplified or reduced data is the Commission's official hourly weather data; and,

b) The ACM program meets all of the certification tests using the reduced weather data.

Whatever weather data and/or weather data reduction methods are used, approval of the ACM for compliance purposes with the standards is contingent upon the fact that approved weather data will be used for all compliance runs. The Commission must be able to verify that the proper weather data is being used by building permit applicants.

The official weather data for energy compliance is available from the Commission in a form suitable for 3.5" high density IBM PC-formatted diskettes. There are 16 climate zones, each with an 8760 hourly records containing raw data on a variety of ambient conditions such as:

- Dry bulb temperature
- Wet bulb temperature
- Wind speed and direction
- Direct solar radiation
- Diffuse radiation

Each climate zone file includes the non-temperature data of a particular city whose annual climate data has been judged representative of the construction locations within that zone. The values listed by climate zone and the nominal city location for each climate zone in Table C-1 in this section, Section C.1, must be used for any given climate zone if the ACM does not automatically make local city weather adjustments to the files.

As indicated above the reference method uses local city ASHRAE design data to adjust the climate zone weather data. These adjustments customize the temperature data, especially the extremes, to conform to the ASHRAE design data statistics for the city in question. This makes the HVAC sizing and energy calculations more realistic for energy compliance simulations.

Table C-1: California Climate Zone Summary

Climate Zone	City	Latitude	Longitude	Elevation
1	Arcata	40.8	124.2	43
2	Santa Rosa	38.4	122.7	164
3	Oakland	37.7	122.2	6
4	Sunnyvale	37.4	122.4	97
5	Santa Maria	34.9	120.4	236
6	Los Angeles AP	33.9	118.5	97
7	San Diego	32.7	117.2	13
8	El Toro	33.6	117.7	383
9	Burbank	34.2	118.4	655
10	Riverside	33.9	117.2	1543
11	Red Bluff	40.2	122.2	342
12	Sacramento	38.5	121.5	17
13	Fresno	36.8	119.7	328
14	China Lake	35.7	117.7	2293
15	El Centro	32.8	115.6	-30
16	Mt. Shasta	41.3	122.3	3544

C.2 WYEC2 Climate/Weather Data Format

The ASCII versions of the WYEC2 weather files consist of 8760 identical fixed format records, one for each hour of a 365 day year. Each record is 116 characters in length and is organized according to the format shown in Table C-2 which follows.

The WYEC2 format is derived from the NOAA TD-9734 Typical Metteorological Year (TMY) format in that WYEC2 uses the same field encoding and units as TMY. However, it should be noted that ***all WYEC2 values are for Local Standard Time.*** That is, WYEC2 data should be read sequentially and used with no conversion (except any required unit conversions). This is in marked contrast to the TMY files which contain solar data for Apparent Solar Time and meteorological data for Local Standard Time.

Irradiance and illuminance fields contain data integrated over the hour, meteorological fields contain observations made at the end of the hour. For example, hour 12 contains irradiance/illuminance integrated from 11-12 and meteorological observations made at 12.

Table C-2
WYEC DATA FORMAT

TABLE C-2
WYEC2 DATA FORMAT

Field Number	Data Positions	Flag Position (see notes)	Data Element and Description
001	001-005	--	WBAN station identification number Unique number to identify each station California compliance files contain 00001 - 00016 in this field to indicate the climate zone
002	006-006	--	File source code W = WYEC T = TMY C = California Compliance
003	007-014	--	Time, Yr Mo Day Hr (2 chars each) Yr omits the "19" and indicates the source year for the data, i.e., 00 = 1900, 99 = 1999. Data within a single WYEC2 file may have been observed in more than one year. Mo is 1 to 12. Day is 1 to month length (28, 30, or 31). Hr is 1 to 24.
101	015-018	--	Extraterrestrial irradiance, kJ/m^2 Amount of solar energy received at top of atmosphere during solar hour ending at time indicated in field 003, based on solar constant of 1367 kJ/m^2. Nightime values are shown as 0.
102	019-022	023-024	Global horizontal irradiance, kJ/m^2 Total of direct and diffuse radiant energy received on a horizontal surface by a pyranometer during the hour ending at the time indicated in field 003.

103	025-028	029-030	Direct normal irradiance, kJ/m^2 Portion of the radiant energy received at the pyrheliometer directly from the sun during the hour ending at the time indicated in field 003.
104	031-034	035-036	Diffuse horizontal irradiance, kJ/m^2 Amount of radiant energy in kJ/m2 received at the instrument indirectly from the sky during the hour ending at the time indicated in field 003.
105	037-040	041	Global horizontal illuminance, lux * 100
106	042-045	046	Direct normal illuminance, lux * 100
107	047-050	051	Diffuse horizontal illuminance, lux * 100
108	052-055	056	Zenith luminance, Cd/m^2 * 100
110	057-058	059	Minutes of sunshine, 0 - 60 minutes
201	060-063	064	Ceiling Height, m * 10 Ceiling is defined as opaque sky cover of 0.6 or greater. 0000 - 3000 = 0 to 30,000 m 7777 = unlimited; clear 8888 = unknown height of cirroform ceiling
202	065-068	069	Sky Condition All observations assumed to be made after 1 June 1951. ("indicator" at position 77 in TMY is omitted). Coded by layer in acending order; four layers are described; if less than 4 layers are present the remaining positions are coded 0. The code for each layer is: 0 = Clear of less than 0.1 cover 1 = Thin scattered (0.1 - 0.5 cover) 2 = Opaque scattered (0.1 - 0.5 cover) 3 = Thin broken (0.6 - 0.9 cover) 4 = Opaque broken (0.6 - 0.9 cover) 5 = Thin overcast (1.0 cover) 6 = Opaque overcast (1.0 cover) 7 = Obscuration

			8 = Partial obscuration
203	070-073	074	Visibility, m * 100 Prevailing horizontal visibility. 0000-1600 = 0 to 160 kilometers 8888 = unlimited
204 204 (cont.)	075-082 075	083	Weather Eight single digit codes as follows: Occurrence of thunderstorm, tornado or squall. 0 = None 1 = Thunderstorm - lightning and thunder. Wind gusts less than 50 knots, and hail, if any, less than 3/4 inch diameter. 2 = Heavy or severe thunderstorm - frequent intense lightning and thunder.Wind gusts 50 knots or greater and hail, if any, 3/4 inch or greater diameter. 3 = Report of tornado or waterspout. 4 = Squall (sudden increase of wind speed by at least 16 knots, reach 22 knots or more and lasting for at least one minute).
204 (cont.)	076		Occurrence of rain, rain showers or freezing rain: 0 = None 1 = Light rain 2 = Moderate rain 3 = Heavy rain 4 = Light rain showers

			5 = Moderate rain showers 6 = Heavy rain showers 7 = Light freezing rain 8 = Moderate or heavy freezing rain
204 (cont.)	077		Occurrence of drizzle, freezing drizzle 0 = None 1 = Light drizzle 2 = Moderate drizzle 3 = Heavy drizzle 4 = Light freezing drizzle 5 = Moderate freezing drizzle 6 = Heavy freezing drizzle
204 (cont.)	078		Occurrence of snow, snow pellets or ice crystals 0 = None 1 = Light snow 2 = Moderate snow 3 = Heavy snow 4 = Light snow pellets 5 = Moderate snow pellets 6 = Heavy snow pellets 7 = Light ice crystals 8 = Moderate ice crystals Beginning April 1963 intensities of ice crystals were discontinued. All occurrences since this date are recorded as an 8.
204 (cont.)	079		Occurence of snow showers or snow grains 0 = None 1 = Light snow showers

			2 = Moderate snow showers 3 = Heavy snow showers 4 = Light snow grains 5 = Moderate snow grains 6 = Heavy snow grains Beginning April 1963 intensities of snow grains were discontinued. All occurrences since this date are recorded as a 5.
204 (cont.)	080		Occurence of sleet (ice pellets), sleet showers or hail 0 = None 1 = Light sleet or sleet showers (ice pellets) 2 = Moderate sleet or sleet showers (ice pellets) 3 = Heavy sleet or sleet showers (ice pellets) 4 = Light hail 5 = Moderate hail 6 = Heavy hail 7 = Light small hail 8 = Moderate or heavy small hail Prior to April 1970 ice pellets were coded as sleet. Beginning April 1970 sleet and small hail were redefined as ice pellets and are coded as a 1, 2, or 3 in this position. Beginning September 1956 intensities of hail were no longer reported and all occurrences were recorded as a 5.
204 (cont.)	081		Occurrence of fog, blowing dust or blowing sand 0 = None 1 = Fog 2 = Ice Fog 3 = Ground Fog 4 = Blowing dust 5 = Blowing sand These values recorded only when visibility less than 7 miles.
204 (cont.)	082		Occurrence of smoke, haze, dust, blowing snow or blowing spray:

			0 = None 1 = Smoke 2 = Haze 3 = Smoke and haze 4 = Dust 5 = Blowing snow 6 = Blowing spray These values recorded only when visibility less than 7 miles.
205	084-088	089	Station pressure, kilopascals (kPa) * 100 Pressure at station level 08000 - 10999 = 80 to 109.99 kPa.
206	090-093	094	Dry bulb temperature, ^{o}C * 10 -700 to 0600 = -70.0 to +60.0 ^{o}C
207	095-098	099	Dew point, ^{o}C * 10 -700 to 0600 = -70.0 to +60.0 ^{o}C
208	100-102	103	Wind direction, 0 - 359 degrees 0 = north Note TMY range is 0-360, WYEC2 has recoded 360 as 0.
209	104-107	108	Wind speed, m/s * 10 0 - 1500 = 0 to 150.0 m/s. Wind speed and wind direction both 0 indicates calm.
210	109-110	111	Total Sky Cover, 0 - 10 in tenths Amount of celestial dome in tenths covered by clouds or obscuring phenomena.
211	112-113	114	Opaque Sky Cover, 0 - 10 in tenths Amount of celestial dome in tenths covered by clouds or obscuration through which the sky and/or higher cloud layers cannot be seen.
212	115-115	116	Snow Cover 0 = no snow or a trace of snow 1 = indicates more than a trace of snow on the ground

Notes for Table C-2 - WYEC2 Format:

1. Total file size (including CRLFs) = 118 x 8,760 = 1,033,680 characters.

2. Flag characters indicate the source of the associated value and, in the case of solar fields, optionally give information about the quality of the value.

   Some fields have no flag, others have 1 or 2 character flags as follows:

Field	***Flag type / comment***
001 - 003	None (record identification fields)
101	None (calculated extraterrestrial irradiance is always present)
102 - 1042	character (irradiance values)
105 - 2121	character (all remaining fields)

One character flags are alphabetic (with the exception of 9 for missing) and are defined as follows:

(blank)	Value was observed (that is, not derived with a model and not altered.)
A	Value has been algorithmically adjusted (e.g., dry bulb temperatures were shifted to match long term means).
E	Value was missing and has been replaced by a hand estimate.
F	Value was bad and has been replaced by a hand estimate.
I	Value was missing and has been replaced with one derived by interpolation from neighboring observations.
J	Value was bad and has been replaced with one derived by interpolation from neighboring observations.
M	Value was missing and has been replaced with one derived with a model (modelused depends on element).
N	Value was bad and has been replaced with one derived with a model (model useddepends on element).
P	Value violated a physical limit and has been replaced by that limit.
Q	Value is derived from other values (e.g., illuminance data which were not observed).
9	Value is missing; data positions contain 9s as well.

Two character flags (on irradiance fields 102, 103, and 104) are *either*:

A 1 character flag (as defined above) followed by a blank, or

A 2 character numeric value in the range 00 to 99 and are defined in *SERI Standard Broadband Format 2*, as follows:

00 Element is untested (original data)

01-03 Element passed tests on physical limits, model limits (for tolerances less than 3%), and reasonable coupling to other parameters (for tolerances less than 3%).

04 Element passed hand/eye tests.

05 Element failed hand/eye tests and has not been corrected.

06 Element was missing and has not been replaced with an estimate.

07 Element's value is lower than a physical limit.

08 Element's value is higher than a physical limit.

09 Element's value is inconsistent with other components (e.g. direct not consistent with global)

10-93 Element exceeded the 3% tolerance in one of four ways. The following error types are defined:

0 = too low by 3-parameter coupling

1 = too high by 3-parameter coupling

2 = too low by 2D boundary comparison

3 = too high by 2D boundary caparison

The flags in this range are constructed in such a way that both the percentage of error and the type of error are encoded in the two digit flag. To create the flag, one multiplies the percentage of disagreement by 4, subtract 2, and add the error type. The percentage of error should be truncated - only the integer part is used.

The particular error is determined by the remainder of MOD(IQC=2 / 4), where "MOD0 is a mathematical function representing the remainder of the quantity (IQC+2)/4 and "IQC" is the two digit flag number. The percentage error is determined by

IPCT = Int((IQC + 2) /4)

IPCT = 23 indicates an error greater than 23%.

94-97 KN = KT + ERR

FLAG ERR

94 5% ETR <= ERR <10% ETR

95 10% ETR <= ERR <15% ETR

96 15% ETR <= ERR < 20% ETR

97 20% ETR <= ERR

99 Element is missing or null.

It should be noted that the 2 character numeric flags are appropriate for encoding the results of quality control processing of archival solar data. The 1 character alphabetic flags are appropriate for "best estimate" data sets in which any questionable values have been replaced. most WYEC2 files used for engineering purposes will fall into the latter category and will thus use the alphabetic flags on solar fields.

3. Missing elements are 9 filled: all data and flag positions contain 9s.

4. Conversion factors relevant to WYEC2 use:

To convert from	***to***	***multiply by***
kj/m2	Btu/ft2	0.08807
m/s * 10	mph	0.2273
kPai	n. Hg.	0.002953
m * 10	ft	32.808
m * 100 miles	miles	0.06214

C.3 Climate/Weather Data Adjustments for Local Conditions

This appendix section describes the official procedure used by the California Energy Commission to adjust the Title 24 climate zone data for the sixteen (16) climate zones to match the ASHRAE design day conditions for a specific city.[1] Computer software available from the California Energy Commission takes weather data from one of the sixteen climate zones and uses ASHRAE design data for a specific city within that climate zone to create weather data in the format required by the DOE-2 building simulation program.[2] The generated weather data has the latitude, longitude, elevation and air properties of a particular city instead of the climate zone's designated weather station indicated in Table D-3. This procedure only modifies the weather data on the climate zone data file to match a city's design conditions for the days which fall within the ASHRAE summer and winter design day percentage levels. However, the entire data set is adjusted to reflect the city's elevation. This city-specific data into DOE-2 allows the program's Heating Ventilation and Air-Conditioning (HVAC) sizing procedures to use design conditions closer to the simulated building's actual location. This section outlines the procedure used to incorporate a city's design day data into an hourly climate zone data set.

BACKGROUND

The California Energy Commission, in developing and implementing the Title 24 building energy efficiency standards, has defined sixteen zones that encompass the diversity of California's climatic regions. Each climate zone's hourly weather data set has been derived, predominantly, from a single weather station. Past work sponsored by the Commission modified these data sets to reflect the weather conditions of specific geographic areas within certain climate zones where high levels of building construction were anticipated. This modified Title 24 climate zone data, however, does not represent the particular climatic conditions of any individual city or a specific building site but rather the climate zone as a whole. The weather adjustments described below are intended to increase a compliance program's ability to properly size and simulate HVAC systems.

DEFINITIONS

CITY	One of the California cities listed in ASHRAE's CLIMATIC DATA FOR REGION X
TAPE	Hourly data which describes the regional weather patterns for one of the 16 California mate zones
RH	Relative Humidity (%)
DB	Dry Bulb temperature (^{o}F)
WB	Wet Bulb temperature (^{o}F)
P	Pressure (psia)
MIN	Minimum Daily Dry Bulb Temperature (^{o}F)
MAX	Maximum Daily Dry Bulb Temperature (^{o}F)

AVG	Average Daily Dry Bulb Temperature (^oF) =MAX - MIN) / 2
RANGE	Daily Dry Bulb Temperature Range (^oF) = (MAX - MIN)
RH RATIO	The Daily Ratio of RH_{MAX} for the CITY to RH_{MAX} for the TAPE
ODR	Outdoor Daily Range (^oF) as defined by ASHRAE: the difference between the average maximum and average minimum temperature for the warmest month
F	An hourly temperature function derived from the TAPE = (DB_{HR} - AVG) / RANGE

METHODOLOGY

First, the climate zone design conditions as specified by ASHRAE are computed from the TAPE. The maximum DB is also found off the TAPE. The CITY maximum DB is computed as:

$$CITY_{max\ DB} = TAPE_{max\ DB} * CITY_{0.1\%\ DB} / TAPE_{0.1\%\ DB}\ . \quad [1]$$

The psychrometric equations are used to derive RH for the TAPE design conditions[3]. The atmospheric pressure is adjusted for the CITY elevation, then RH is computed for the CITY design conditions. The form of equation [1] is used to derive the CITY maximum RH, using the TAPE maximum RH and the RH values computed for the TAPE and the CITY at the 0.1% DB conditions.

For each day of the year the following steps are completed:

1. MAX, Min, AVG, RAGE, WB_{MAX} and RH_{MAX} are determined for the TAPE,

2. A mapping procedure, delineated in Figure 1, is used to find RH_{MAX} for the CITY from the CITY RH design values, the TAPE DB design values and MAX for the TAPE,

3. RH_{MAX} and RH RATIO are determined for the CITY. The RH RATIO is set to 1 for all days with MAX less than the CITY 2.0% maximum DB, which equates the RH of the CITY to the RH of the TAPE for all non-design days,

4. MAX and MIN for the CITY are computed using mapping procedures similar to that illustrated in Figure 1, from the CITY DB design conditions, the TAPE DB design conditions and MAX/MIN for the TAPE,

5. MAX and MIN for the CITY are corrected for the CITY elevation[4],

6. RANGE is calculated for the CITY. RANGE is adjusted by the ratio of the ODR for the CITY to the ODR of the TAPE if MAX is greater then the CITY 2.0% maximum DB,

7. AVG for the CITY is calculated in one of three ways:

   (a) AVG = MAX -5.0* RANGE,
   if MAX > CITY 2.0% maximum DB, or
   (b) AVG = MIN + 0.5* RANGE,
   if MIN < CITY 0.6% minimum DB, or
   (c) AVG = (MAX + MIN) / 2.

Once the daily CITY statistics are computed, they can be applied to the hourly TAPE to generate an hourly CITY weather data set. For each hour of the year, the following steps are completed.

1. F is calculated from the Tape,
2. P is corrected for CITY elevation,
3. RH is calculated for the TAPE,
4. RH for the CITY is derived by applying the RH RATIO to the RH for the TAPE,
5. DB for the CITY is computed: DB = AVG + F * RANGE,
6. WB is calculated using the new values for RH, DB and P for the CITY.

Upon completion of all weather adjustments the resulting data set is converted to the binary format required by the DOE-2 simulation program.

RESULTS

An example of the hourly weather adjustments from a TAPE to a CITY is displayed in figure 2. Four summer days are extracted from both the cimate zone 16 data (Mt. Shasta) and the city-specific data (Tahoe City). The first day plotted falls below the design day threshold; the next three days plotted are design days. The figure depicts the expected downshift of hourly temperatures from Mt. Shasta (maximum DB = 96^0F) to Tahoe City (maximum DB = 87^0F).

SOFTWARE PACKAGE

To obtain the software used to adjust DOE-2 files to local design conditions for 641 California cities that is described in this section of Appedix D write to:

LOCAL WEATHER SOFTWARE
EFFICIENCY TECHNOLOGY OFFICE
CALIFORNIA ENERGY COMMISSION
1516 NINTH ST., MS-42
SACRAMENTO, CA 95814-5512

You must include a self-addressed, stamped diskette mailer and a preformatted 1.4

NOTES for SECTION C.3

1. ASHRAE Publication SPCDX, CLIMATIC DATA FOR REGION X: ARIZONA, CALIFORNIA, HAWAII, NEVADA, defines a city's design day conditions as the ambient dry bulb and wet bulb temperatures which are percentage levels of hours on an annual basis: Summer values are presented for the 0.1%, 0.5% and 2.0% of the annual maximum dry bulb temperature; Winter values are presented for the median, the 0.2% and 0.6% of the annual minimum dry bulb temperature. This publication lists design day data for 641 California cities.

2. The computer software described herein produces two output files. The first file is the hourly weather data in binary DOE-2 format. To produce this file staff has incorporated a program created by Jeff Hirsch (James J. Hirsch and Associates) which converts an ASCII data file into the packed DOE-2 file format. This file

is compatible with the DOE-2 program compiled and distributed by James J. Hirsch and Associates as well as several other PC versions of DOE-2. The second file produced is an ASCII file that contains building location data as well as specific design data required by the CEC's nonresidential Alternative Calculation Method (ACM) procedures.

3. The mathematical equations which describe the thermodynamic properties of moist air are published in the ASHRAE HANDBOOK FUNDAMENTALS Volume, PSYCHROMETRICS Chapter. The relative humidity (RH) which corresponds to specific dry bulb and wet bulb temperatures is derived by these principles of psychrometrics throughout this weather adjustment procedure.

4. Elevation adjustments to dry bulb temperature and pressure are made using the standard atmospheric data published in the ASHRAE FUNDAMENTALS Volume, PSYCHROMETRIC Chapter.

C.4 California City Design Weather Data

The data contained in the multi-page Table C-3 was obtained through a joint effort by the Southern California Chapter and the Golden Gate Chapter of ASHRAE. It is reprinted here with the expressed written permission of Southern California Chapter ASHRAE, Inc.

A full listing of design weather data for California cities is contained in the ASHRAE publication ***SPCDX, Climatic Data for Region X: Arizona, California, Hawaii, Nevada*** (May, 1982). The publication may be ordered from:

Order Desk
Building News
3055 Overland Avenue
Los Angeles, CA 90034
(800) 873-6397 or (213) 202-7775

Cost: $17.50 + tax + $4.25 shipping and handling

KEY TO ABBREVIATIONS
for City Climate Design Data

Abbreviation	Meaning
AFB	Air Force Base
AFS	Air Force Station
AP	Airport
CO	City/County Office
FD	Fire Department
FS	Fire Station
MCB	Marine Corp. Base
NAS	Naval Air Station
NM	National Monument
PH	Power House
RS	Ranger Station

City	County	Climate Zone	Latitude	Longitude	Elevation	SUMMER							Winter Median of Extremes	HDD*
						0.1% Dry Bulb	0.1 % Wet Bulb	0.5% Dry Bulb	0.5 % Wet Bulb	2% Dry Bulb	2% Wet Bulb	Outdoor Daily Range		
Adelanto	San Bernardino	14	34.6		2865	105	67	101	65	97	62	39	14	
Adin RS	Modoc	16	41.20	120.95	4195	96	61	92	60	88	59	43	-7	
Agoura Hills	Los Angeles	9	34.2		700	103	70	96	68	90	66	29	27	
Alameda NAS	Alameda	3	37.79	122.32	15	88	65	82	64	76	62	21	35	2507
Alamo	Contra Costa	12	37.90	122.92	410	102	69	97	68	92	66	30	23	
Albany	Alameda	3	37.90	122.25	40	88	65	83	64	77	62	16	30	
Alderpoint	Humboldt	2	40.20	123.62	460	100	69	95	67	90	65	39	21	3424
Alhambra	Los Angeles	9	34		483	100	71	96	70	90	68	25	30	
Aliso Viejo	Orange	8	33.6		50	91	69	83	68	76	66	18	30	
Almaden AFS	Santa Clara	3	37.20	121.90	3470	95	62	90	60	85	59	20	20	4468
Alondra Park	Los Angeles	6	33.90		50	91	69	86	68	81	66	17	35	
Alpine	San Diego	10	32.79	116.77	1735	99	69	95	68	91	67	35	27	
Alta Sierra	Kern	16	35.7		6500	87	62	84	61	80	59	32	-4	
Altadena	Los Angeles	9	34.20		1200	99	68	94	67	88	66	31	32	1920
Alturas RS	Modoc	16	41.5	120.55	4400	99	62	96	61	91	59	43	-10	6895
Alum Rock	Santa Clara	4	37.40	121.83	70	95	68	90	66	84	64	22	28	
American Canyon	Napa	2	37.6		85	93	67	90	66	84	64	23	28	
Anaheim	Orange	8	33.79		158	99	69	92	68	85	67	26	32	
Anderson	Shasta	11	40.5	122.25	430	107	71	103	70	97	68	30	26	
Angwin	Napa	2	38.59	122.42	1815	98	66	93	64	88	62	33	25	
Antioch	Contra Costa	12	38	121.77	60	102	70	97	68	91	66	34	22	2627
Apple Valley	San Bernardino	14	34.5		2935	105	66	101	65	97	64	38	14	
Aptos	Santa Cruz	3	37		500	94	67	88	66	83	63	30	27	
Arcadia	Los Angeles	9	34.20		475	100	69	96	68	91	67	30	31	
Arcata	Humboldt	1	41	124.10	218	75	61	69	59	65	58	11	28	5029
Arden	Sacramento	12	38.5		80	104	70	100	69	94	67	35	28	
Arroyo Grande	San Luis Obispo	5	35.09		105	92	66	86	64	79	62	18	28	
Artesia	Los Angeles	8	33.79		50	99	71	91	70	85	68	23	33	
Arvin	Kern	13	35.20		445	106	71	102	69	98	68	30	26	
Ash Mtn	Tulare	13	36.5	118.83	1708	105	69	101	68	97	66	30	25	2703
Ashland	Alameda	3	37.7		45	92	66	86	65	81	62	24	26	
Atascadero	San Luis Obispo	4	35.5	120.70	837	94	66	89	67	84	65	42	25	
Atherton	San Mateo	3	37.5	122.23	50	90	66	84	64	78	62	27	23	
Atwater	Merced	12	37.29		150	102	72	99	70	94	67	38	24	
Auberry	Fresno	13	37.09	119.50	2140	102	69	98	67	95	64	36	21	3313
Auburn	Placer	11	38.90	121.07	1292	103	69	100	67	95	66	33	25	3089
Avalon	Los Angeles	6	33.40	118.32	25	83	64	75	62	69	60	11	37	2204
Avenal	Kings	13	36		550	103	70	98	70	93	69	34	23	
Avocado Heights	Los Angeles	16	34.2		550	101	69	97	68	91	68	30	28	
Azusa	Los Angeles	9	34.09	118.15	605	101	70	97	69	91	68	36	31	
Baker	San Bernardino	14	35.29	116.10	940	115	73	112	72	108	70	29	23	
Bakersfield AP	Kern	13	35.40	119.05	475	106	71	102	70	98	68	34	26	2185
Balch PH	San Bernardino	14	36.90		1720	100	67	97	66	93	64	26	26	
Baldwin Park	Los Angeles	9	34		394	100	69	96	69	90	68	32	31	
Banning	Riverside	15	33.90	116.88	2349	104	69	100	68	96	67	34	20	
Barrett Dam	San Diego	10	32.70	116.67	1623	103	69	97	68	92	67	35	22	2656
Barstow	San Bernardino	14	34.90	117.03	2162	107	69	104	69	100	67	35	16	2580
Baywood-Los Osos	San Luis Obispo	5	35.3		100	88	65	82	64	76	62	14	31	
Beale AFB	Yuba	11	39.09	121.43	113	105	71	102	70	97	68	34	25	2835

City	County	Climate Zone	Latitude	Longitude	Elevation	SUMMER							Winter Median of Extremes	HDD*
						0.1% Dry Bulb	0.1 % Wet Bulb	0.5% Dry Bulb	0.5 % Wet Bulb	2% Dry Bulb	2% Wet Bulb	Outdoor Daily Range		
Beaumont	Riverside	10	33.90	116.97	2605	103	68	99	67	95	66	38	22	2628
Bell	Los Angeles	8	33.90		143	97	70	91	69	85	67	22	33	
Bell Gardens	Los Angeles	8	33.90		160	97	70	91	69	78	62	24	29	
Bellflower	Los Angeles	8	33.79		73	98	70	91	69	85	67	21	32	
Belmont	San Mateo	3	37.5		33	90	66	84	64	78	62	24	29	
Ben Lomond	Santa Cruz	3	37.09	122.10	450	92	67	85	66	79	63	30	25	
Benicia	Solano	12	38.09	122.10	55	99	69	93	67	87	65	30	28	
Berkeley	Alameda	3	37.90	122.25	345	90	64	83	63	76	61	16	33	2950
Berryessa Lake	Napa	2	38.59	122.05	480	102	70	98	69	92	67	35	26	
Beverly Hills	Los Angeles	9	34.09	118.17	268	94	69	88	68	83	66	20	39	
Big Bar RS	Trinity	16	40.79	121.80	1260	102	68	98	67	93	65	46	19	
Big Bear Lake	San Bernardino	16	34.20	116.88	6745	87	59	83	58	79	56	32	-3	6850
Bishop AP	Inyo	16	37.40	118.37	4108	103	61	100	60	97	58	40	5	4313
Blackhawk	Contra Costa	12	37.7		10	88	65	82	64	76	62	21	35	
Blackwells Corner	Kern	13	35.59	119.90	644	99	68	94	66	89	65	31	23	
Bloomington	San Bernardino	10	34		980	106	71	102	70	98	69	34	30	
Blue Canyon AP	Placer	16	39.29	120.70	5280	88	60	85	59	81	57	20	13	5704
Blythe AP	Riverside	15	33.59	114.72	395	115	74	112	73	108	71	27	28	1219
Blythe CO	Riverside	15	33.59	114.60	268	115	74	112	73	108	71	27	24	1312
Boca	Nevada	16	39.40	120.10	5575	92	58	89	57	84	55	46	-18	8340
Bodie	Mono	16	38.20	119.02	8370	83	50	80	49	76	48	42	-21	
Bonadella Ranchos – Madera Rancho	Fresno	13	36.8		270	105	72	101	70	96	68	40	24	
Bonita	Madera	13	32.70	117.03	105	91	69	82	67	78	64	20	28	1864
Boron AFS	Kern	14	35.09	117.58	3015	106	70	103	69	98	68	35	18	3000
Borrego Desert PK	San Diego	15	33.20	116.40	805	112	76	107	74	101	72	36	25	
Bostonia	San Diego	10	32.8		600	96	70	91	69	81	67	30	29	
Boulder Creek	Santa Cruz	3	37.2		493	92	67	85	65	79	63	30	25	
Bowman Dam	Placer	11	39.40	120.65	5347	89	59	86	57	82	55	26	9	5964
Boyes Hot Sprgs	Sonoma	2	38.2		300	100	70	95	69	89	67	40	22	
Brannan Island	Sacramento	12	38.09	121.70	30	100	69	95	68	89	67	10	24	
Brawley 2 SW	Imperial	15	33	115.55	-100	113	74	110	73	105	73	32	25	1204
Brea Dam	Orange	8	33.90		275	100	69	94	68	86	66	29	30	
Brentwood	Contra Costa	12	37.9		71	102	70	97	68	89	65	34	27	
Bridgeport	Mono	16	38.20	119.22	6470	89	56	86	54	82	53	41	-20	
Broderick-Bryte	Yolo	12	38.59	121.50	20	104	71	100	69	94	67	36	25	
Brooks Ranch	Yolo	12	38.79	122.15	294	104	71	99	70	93	68	35	19	2968
Buena Park	Orange	8	33.90		75	98	69	92	68	85	67	25	31	
Burbank AP	Los Angeles	9	34.20	118.35	699	101	70	96	68	90	67	28	29	1701
Burbank Vly Pump	Los Angeles	9	34.20	118.35	655	101	69	96	68	90	66	28	29	1678
Burlingame	San Mateo	3	37.59	122.35	10	88	67	82	64	76	63	20	30	
Burney	Shasta	16	40.90	121.67	3127	95	64	92	63	88	61	42	0	6404
Butler Valley (Korbel)	Humboldt	1	40.7	123.93	420	91	66	86	64	81	62	22	20	
Buttonwillow	Kern	13	35.40	119.47	269	103	71	99	70	95	68	36	20	2621
Cabrillo NM	San Diego	7	32.70	117.23	410	89	69	84	68	80	67	12	39	
Cachuma Lake	Santa Barbara	5	34.59	119.98	781	97	69	92	67	87	65	19	26	
Calabasas	Los Angeles	9	34.20		1100	102	71	98	70	93	69	26	26	2348
Calaveras Big Trees	San Joaquin	12	38.29	120.32	4696	92	61	88	60	84	58	33	11	5848
Calexico	Imperial	15	32.70		12	114	74	110	73	106	71	28	26	

City	County	Climate Zone	Latitude	Longitude	Elevation	SUMMER							Winter Median of Extremes	HDD*
						0.1% Dry Bulb	0.1 % Wet Bulb	0.5% Dry Bulb	0.5 % Wet Bulb	2% Dry Bulb	2% Wet Bulb	Outdoor Daily Range		
California City	Kern	14	35.1		2400	107	69	104	68	99	66	33	10	
Callahan	Siskiyou	16	41.29	122.80	3185	97	63	93	62	88	60	35	7	
Calwa	Fresno	13	36.79		330	105	73	101	71	97	68	34	23	
Camarillo	Ventura	6	34.20	119.20	147	91	69	84	68	78	67	22	28	
Cambria AFS	San Luis Obispo	5	35.5	121.07	690	78	62	72	61	66	59	16	30	3646
Cameron Park	El Dorado	12	38.6		1800	101	67	98	66	93	65	42	20	
Camp Pardee	Calaveras	12	38.20	120.85	658	106	71	103	70	98	69	36	27	2812
Camp Pendleton	San Diego	10	33.4		50	88	69	85	68	80	67	12	34	
Camp Roberts	Monterey	4	35.79	120.75	765	106	72	101	71	95	69	45	16	2890
Campbell	Santa Clara	4	37.29	121.83	195	93	69	88	66	83	65	30	28	
Campo	San Diego	14	32.59	116.47	2630	101	67	95	66	90	66	41	16	3303
Canoga Park	Los Angeles	9	34.20	118.57	790	104	71	99	70	93	69	38	25	1884
Cantil	Kern	14	35.29	117.97	2010	111	71	107	71	103	70	32	12	
Canyon Dam	Plumas	16	40.09	121.08	4555	93	60	90	59	85	57	39	1	6834
Canyon Lake	Riverside	10	33.8		1500	105	70	101	69	97	68	39	22	
Capitola	Santa Cruz	3	37		64	94	67	88	66	81	63	24	27	
Cardiff-by-the-Sea	San Diego	7	33		80	87	68	83	67	77	65	12	35	
Carlsbad	San Diego	7	33.20		44	87	68	83	67	77	65	10	34	
Carmel Valley	Monterey	3	36.5	121.73	425	94	68	88	66	80	65	20	25	
Carmel-by-the-Sea	Monterey	3	36.5		20	87	65	78	62	71	61	20	30	
Carmichael	Sacramento	12	38.59	121.45	100	104	70	100	69	94	68	35	25	
Carpinteria	Santa Barbara	6	34.40		385	90	69	83	67	77	65	15	30	
Carson	Los Angeles	6	33.79		60	96	69	88	68	82	66	19	33	
Casa de Oro-Mount	San Diego	10	32.7		530	96	71	88	69	84	67	19	34	
Castle AFB	Merced	12	37.40	120.57	188	105	71	101	70	96	69	33	24	2590
Castro Valley	Alameda	3	37.59	122.20	177	93	67	87	67	80	65	25	24	
Castroville	Monterey	3	36.8		20	86	66	77	63	70	61	18	32	
Cathedral City	Riverside	15	33.8		400	117	74	113	73	109	72	33	26	
Cathays Valley	Mariposa	12	37.40	120.05	1000	102	69	99	68	94	67	38	21	
Cecilville	Siskiyou	16	41.09	123.13	3000	95	63	89	62	84	59	44	13	
Cedarville	Modoc	16	41.5	120.17	4670	97	61	94	60	89	58	35	1	6304
Centerville PH	Butte	11	39.79	121.67	522	105	70	100	68	96	67	40	25	2895
Ceres	Stanislaus	12	37.59		90	101	72	96	70	90	67	36	24	
Cerritos	Los Angeles	8	33.90		34	99	71	92	69	85	68	23	33	
Charter Oak	Los Angeles	9	34.1		600	101	70	97	69	91	68	34	29	
Chatsworth	Los Angeles	9	34.2		964	98	69	93	68	87	66	38	26	
Cherry Valley Dam	Tuolumne	10	38		4765	96	62	92	61	88	59	32	9	
Cherryland	Alameda	3	37.5		100	93	67	86	66	79	64	24	26	
Chester	Plumas	16	40.29	121.23	4525	94	62	91	61	86	59	33	-3	
Chico Exp Sta	Butte	11	39.70	121.78	205	105	70	102	69	96	68	37	22	2878
China Lake	San	14	35.70	117.68	2220	112	70	108	68	104	68	33	15	2560
Chino	San Bernardino	10	34		714	104	70	100	69	94	68	35	27	
Chino Hills	San Bernardino	10	34.1		800	104	70	100	69	94	68	35	27	
Chowchilla	Madera	13	37		200	104	72	101	70	96	68	38	22	
Chula Vista	San Diego	7	32.59	117.08	9	90	70	84	68	79	66	9	33	2072
Citrus Heights	Sacramento	12	38.70	121.45	138	104	71	100	70	94	68	36	24	
Claremont	Los Angeles	9	34.09	117.80	1201	101	69	97	68	91	66	34	29	2049
Clarksburg	Yolo	12	38.40	121.53	14	102	70	97	69	91	67	35	24	2971
Clayton	Contra Costa	12	38		60	102	70	97	68	89	65	34	27	

City	County	Climate Zone	Latitude	Longitude	Elevation	SUMMER							Winter Median of Extremes	HDD*
						0.1% Dry Bulb	0.1 % Wet Bulb	0.5% Dry Bulb	0.5 % Wet Bulb	2% Dry Bulb	2% Wet Bulb	Outdoor Daily Range		
Clearlake Highlands	Lake	2	39	122.72	1360	101	69	97	68	89	65	36	15	
Cloverdale	Sonoma	2	38.79	122.98	320	102	70	97	69	89	66	37	26	2763
Clovis	Fresno	13	36.79	119.72	404	105	72	102	70	98	68	36	22	
Coachella	Riverside	15	33.70		-76	114	74	110	73	106	73	28	25	
Coalinga	Fresno	13	36.20	120.35	671	103	70	98	70	93	69	34	23	2592
Colfax	Placer	11	39.09	120.95	2418	100	66	97	65	92	63	29	22	3424
Colton	San Bernardino	10	34.09		978	105	70	102	68	97	67	35	28	
Colusa	Colusa	11	39.20	122.02	60	103	72	100	70	94	68	36	23	2793
Commerce	Los Angeles	8	33.90		175	98	69	92	68	86	67	23	33	
Compton	Los Angeles	8	33.90	118.22	71	97	69	90	68	83	67	21	33	1606
Concord	Contra Costa	12	38	112.00	195	102	70	97	68	89	65	34	27	3035
Corcoran	Kings	13	36.09	119.70	200	106	72	102	71	98	70	36	22	2666
Corning	Tehama	11	39.9		487	106	71	103	70	98	67	33	23	
Corona	Riverside	10	33.90	117.57	710	104	70	100	69	92	67	35	26	1794
Coronado	San Diego	7	32.70	117.17	20	89	69	82	67	76	65	10	36	1500
Corte Madera	Marin	2	37.90		55	97	68	91	66	84	64	34	28	
Costa Mesa	Orange	6	33.70	117.88	100	88	68	81	66	73	65	16	31	1482
Cotati	Sonoma	2	38.3		100	99	69	94	68	89	66	32	24	
Country Club	San Joaquin	12	37.8		600	102	69	97	68	92	66	30	68	
Covelo	Mendocino	2	39.79	123.25	1385	99	67	93	65	87	63	43	15	4179
Covina	Los Angeles	9	34.09		575	101	70	97	69	91	68	34	29	
Crescent City	Del Norte	1	41.79	124.20	40	75	61	69	59	65	58	18	28	4445
Crestline	San Bernardino	16	34.2		4900	90	62	86	61	81	59	26	13	
Crockett	Contra Costa	12	38	122.22	9	96	68	90	66	85	64	23	28	
Crows Landing	Stanislaus	12	37.40	121.10	140	101	70	96	68	89	66	33	23	2767
Cucamonga	San Bernardino	10	34.09		1450	103	69	99	68	93	65	31	29	
Cudahy	Los Angeles	8	33.90		130	98	70	91	69	85	67	21	33	
Culver City	Los Angeles	8	34	118.40	106	96	70	88	69	83	67	18	35	1515
Cupertino	Santa Clara	4	37.29	122.00	70	96	68	88	67	80	64	30	28	
Cuyama	Santa Barbara	4	34.90	116.58	2255	99	68	96	67	89	66	42	13	
Cuyamaca	San Diego	7	33		4650	92	64	85	62	81	59	29	11	4848
Cypress	Orange	8	33.79		75	98	70	92	69	85	67	24	31	
Daggett AP	San Bernardino	14	34.90	116.78	1915	109	68	106	68	102	66	33	21	2203
Daly City	San Mateo	3	37.59	122.50	410	84	65	78	62	73	61	16	34	
Dana Point	Orange	6	33.5		100	91	69	84	68	78	66	13	30	
Danville	Contra Costa	12	37.8		368	102	69	97	68	92	66	30	23	
Davis	Yolo	12	38.5	121.77	60	103	72	99	70	93	68	41	24	2844
De Sabla	Butte	11	39.90	121.62	2713	97	66	94	64	88	62	35	18	4237
Death Valley	Inyo	14	36.5	116.87	-194	121	77	118	76	114	74	28	27	1147
Deep Springs Clg	Inyo	16	37.5	117.98	5225	98	60	95	59	92	58	35	-3	
Deer Creek PH	Nevada	16	39.29	120.85	4455	93	61	91	60	87	58	39	10	5863
Del Aire	Los Angeles	6	34		100	91	69	84	67	79	66	15	37	
Delano	Kern	13	35.79		323	106	71	102	70	98	69	36	22	
Denair	Stanislaus	12	37.59	120.78	137	100	70	95	69	89	67	38	22	2974
Desert Hot Springs	Riverside	15	34		1060	115	73	111	72	107	71	35	24	
Diamond Bar	Los Angeles	9	34		880	101	69	97	68	92	66	33	28	
Dinuba	Tulare	13	36.5		340	104	73	101	70	96	69	36	24	
Discovery Bay	Contra Costa	12	38.1		10	102	70	97	68	89	65	34	27	
Dixon	Solano	12	38.40	121.85	100	104	72	99	70	93	68	36	24	2826

City	County	Climate Zone	Latitude	Longitude	Elevation	SUMMER							Winter Median of Extremes	HDD*
						0.1% Dry Bulb	0.1 % Wet Bulb	0.5% Dry Bulb	0.5 % Wet Bulb	2% Dry Bulb	2% Wet Bulb	Outdoor Daily Range		
Dobbins	Yuba	11	39.40	121.20	1640	104	70	101	68	96	67	31	24	
Donner Mem Stt Pk	Nevada/Placer	16	39.29	120.25	5937	85	56	82	56	77	54	40	-3	
Donner Summit	Placer	16	39.40	120.33	7239	80	53	77	53	72	50	40	-8	8290
Downey	Los Angeles	8	33.90	118.00	110	98	71	90	70	84	68	21	32	
Downieville RS	Sierra	16	39.59	120.80	2895	98	64	95	63	90	61	42	13	
Doyle	Lassen	16	40	120.10	4390	96	63	93	62	88	59	42	0	
Dry Canyon Res	Ventura	16	34.5	118.53	1455	105	71	100	69	96	68	32	24	
Duarte	Los Angeles	9	34.09		500	100	69	96	68	90	67	33	31	
Dublin	Alameda	12	37.70	121.50	200	99	69	93	67	86	65	35	24	
Dudleys	Mariposa	12	37.70	120.10	3000	97	65	94	64	90	62	44	10	4959
Duttons Landing	Napa	2	38.2	122.30	20	96	68	91	66	84	64	31	26	
Eagle Mtn	Riverside	14	33.79	115.45	973	113	72	110	71	105	69	24	32	1138
Earlimart	Tulare	13	35.8		283	106	71	102	70	98	69	36	23	
East Compton	Los Angeles	8	34		71	97	69	90	68	83	67	21	33	
East Hemet	Riverside	10	33.7		1655	109	70	104	69	101	67	40	20	
East La Mirada	Los Angeles	9	33.9		115	99	70	91	69	85	68	26	31	
East Los Angeles	Los Angeles	9	34	118.25	250	99	69	92	68	86	67	21	38	
East Palo Alto	San Mateo	3	37.5		25	93	66	85	64	77	62	25	26	
East Park Res	Colusa	11	39.40	122.52	1205	101	69	97	68	92	66	38	19	3455
East Pasadena	Los Angeles	16	34.2		864	99	69	94	68	88	67	30	32	
East Porterville	Tulare	13	36.1		393	106	71	102	70	97	69	36	25	
East San Gabriel	Los Angeles	9	34.1		450	99	70	94	69	88	68	30	30	
Edwards AFB	Kern	14	34.90	117.87	2316	107	69	104	68	99	66	35	10	3123
El Cajon	San Diego	10	32.70	116.95	525	96	70	91	69	87	67	30	29	
El Capitan Dam	San Diego	14	32.90	116.82	600	105	71	98	70	93	68	35	29	1533
El Centro	Imperial	15	32.79	115.57	-30	115	74	111	73	107	73	34	26	1212
El Cerrito	Contra Costa	3	37.79		70	91	66	84	64	75	62	17	30	
El Dorado Hills	El Dorado	12	38.6		673	103	70	100	69	94	67	36	24	
El Mirage	San Bernardino	14	34.59		2910	105	69	101	68	97	66	31	9	
El Monte	Los Angeles	9	34.09		271	101	71	97	70	91	68	30	31	
El Paso de Robles	San Luis Obispo	4	35.6		721	102	65	95	65	90	65	44	16	
El Rio	Ventura	6	34.29		50	95	69	88	68	82	66	20	30	
El Segundo	Los Angeles	6	33.90		105	91	69	84	68	79	66	14	37	
El Sobrante	Contra Costa	3	37.9		55	91	66	87	65	82	64	25	30	
El Toro MCAS	Orange	8	33.70	117.73	380	96	69	89	69	82	68	26	34	1591
El Toro Station	Orange	8	33.7		380	96	69	89	69	82	68	26	34	
Electra PH	Amador	12	38.29	120.67	715	106	70	102	69	98	68	41	23	2858
Elk Grove	Sacramento	12	38.4		50	104	71	100	69	94	68	35	29	
Elk Valley	Del Norte	16	42	123.72	1705	96	65	90	63	84	61	39	16	5404
Elsinore	Riverside	10	33.70	117.33	1285	105	71	101	70	98	69	39	22	2128
Encinitas	San Diego	7	33		50	87	68	83	67	77	65	10	35	
Encino	Los Angeles	9	34.2		750	103	71	98	69	92	67	27	28	
Enterprise	Shasta	11	40.59		470	107	69	103	68	97	67	29	26	
Escondido	San Diego	10	33.09	117.08	660	97	69	90	68	84	67	29	26	2005
Eureka	Humboldt	1	40.79	124.17	43	75	61	69	59	65	58	11	30	4679
Exeter	Tulare	13	36.3		350	104	72	101	71	97	69	39	24	
Fair Oaks	Sacramento	12	38.70	121.27	50	104	70	100	69	94	69	36	23	
Fairfax	Marin	2	38		110	96	68	90	66	83	63	34	26	
Fairfield FS	Solano	12	38.29	122.03	38	103	69	98	68	91	66	34	24	2686

City	County	Climate Zone	Latitude	Longitude	Elevation	SUMMER							Winter Median of Extremes	HDD*
						0.1% Dry Bulb	0.1 % Wet Bulb	0.5% Dry Bulb	0.5 % Wet Bulb	2% Dry Bulb	2% Wet Bulb	Outdoor Daily Range		
Fairmont	Los Angeles	14	34.70	118.43	3060	100	67	96	66	92	65	22	22	3330
Fairview	Tulare	16	35.9		3519	97	67	94	66	90	64	43	11	
Fallbrook	San Diego	10	33.59	117.25	660	94	68	89	67	85	66	29	26	2077
Farmersville	Tulare	13	36.3		350	104	72	101	72	97	69	39	24	
Felton	Santa Cruz	3	37		100	94	68	88	66	81	64	28	27	
Ferndale	Humboldt	1	40.5	124.30	1445	76	57	66	56	62	54	12	28	
Fillmore	Ventura	9	34.40		435	100	70	94	69	87	67	30	28	
Five Points	Fresno	13	36.40	120.15	285	103	71	99	70	93	68	36	21	
Fleming Fish & Game	Lassen	16	40.40	120.32	4000	96	62	93	61	88	59	40	-3	
Florence-Graham	Los Angeles	8	34		175	98	69	90	68	84	67	19	35	
Florin	Sacramento	12	38.5		100	104	71	100	69	94	68	35	29	
Folsom Dam	Sacramento	12	38.70	121.17	350	104	70	101	69	95	67	36	25	
Fontana	San Bernardino	10	34.09	117.43	1090	105	70	101	69	97	67	33	30	1530
Foothill Farms	Sacramento	12	38.6		90	104	71	100	70	94	68	36	24	
Forest Glen	Trinity	16	40.40	123.33	2340	96	65	92	64	88	62	42	12	
Fort Baker	Marin	3	37.79	122.47	15	87	66	81	65	73	65	12	33	3080
Fort Bidwell	Modoc	16	41.90	120.13	4498	93	60	90	59	85	57	38	-2	6381
Fort Bragg	Mendocino	1	39.5	123.82	80	75	60	67	59	62	58	15	29	4424
Fort Jones RS	Siskiyou	16	41.59	122.85	2725	98	64	93	63	88	61	44	5	5590
Fort MacArthur	San Diego	7	33.70	118.30	200	92	69	84	68	78	66	13	35	1819
Fort Ord	Monterey	3	36.70	121.77	134	86	65	77	63	70	60	18	24	3818
Fort Ross	Sonoma	1	38.5	123.25	116	79	63	74	62	65	59	19	30	4127
Fortuna	Humboldt	1	40.6		100	75	61	69	59	65	58	11	30	
Foster City	San Mateo	3	37.5	122.73	20	92	67	84	65	76	63	22	29	
Fountain Valley	Orange	6	33.70		60	97	70	90	68	84	67	18	33	
Freedom	Santa Cruz	3	37		1495	89	67	85	64	79	62	22	27	
Fremont	Alameda	3	37.5	122.00	56	94	67	88	65	81	63	24	25	
Fresno AP	Fresno	13	36.79	119.72	328	104	73	101	71	97	68	34	24	2650
Friant Gov Camp	Fresno	13	37	119.72	410	106	72	103	70	100	68	40	23	2768
Fullerton	Orange	8	33.90		340	100	70	94	69	87	68	26	30	
Galt	Sacramento	12	38.2		40	101	70	97	68	91	67	38	23	
Garden Acres	San Joaquin	12	38		20	103	71	98	69	93	67	35	24	
Garden Grove	Orange	8	33.59		85	98	70	91	68	84	67	23	31	
Gardena	Los Angeles	8	33.90		40	92	69	85	68	80	66	18	32	
George AFB	San Bernardino	14	34.59	117.38	2875	105	67	102	65	98	62	31	19	2887
Georgetown RS	El Dorado	12	38.90	120.78	3001	98	64	95	63	90	61	31	18	
Giant Forest	Tulare	16	36.59	118.77	6412	84	56	81	55	77	53	26	5	
Gillespie Field	Solano	12	32.79		385	98	71	91	70	85	68	30	24	
Gilroy	Santa Clara	4	37	121.57	194	101	70	93	68	86	65	25	23	
Glen Avon	Riverside	10	34		827	105	70	101	69	95	67	35	28	
Glendale	Los Angeles	9	34.20		563	101	70	96	68	90	67	28	30	
Glendora	Los Angeles	9	34.09		822	102	69	98	68	92	67	35	30	
Glennville	Kern	16	35.70	118.73	3140	97	67	94	66	90	64	43	11	4423
Gold Rock Rch	Imperial	15	32.90		485	113	73	110	72	106	70	28	31	
Golden Hills	Kern	16	35.1		4000	97	66	93	65	89	64	33	13	
Granada Hills	Los Angeles	6	34.4	118.53	1032	100	70	95	68	89	66	37	28	
Grand Terrace	San Bernardino	10	34.1		1000	105	70	102	68	97	67	35	28	
Grant Grove	Tulare	16	36.70	118.97	6600	82	56	78	55	74	52	26	6	7044
Grass Valley	Nevada	11	39.20	121.07	2400	99	67	96	65	91	63	29	19	

City	County	Climate Zone	Latitude	Longitude	Elevation	SUMMER							Winter Median of Extremes	HDD*
						0.1% Dry Bulb	0.1 % Wet Bulb	0.5% Dry Bulb	0.5 % Wet Bulb	2% Dry Bulb	2% Wet Bulb	Outdoor Daily Range		
Graton	Sonoma	2	38.40	122.87	200	95	68	91	67	82	64	34	22	3409
Greenacres	Kern	13	35.3		400	106	71	102	70	98	68	34	26	
Greenfield	Monterey	4	36.2		287	92	67	88	65	84	64	32	22	
Grossmont	San Diego	7	32.70		530	96	69	89	68	84	66	23	31	
Grover City	San Luis Obispo	5	35.09		100	93	69	86	64	80	62	18	30	
Guadalupe	Santa Barbara	5	35		85	92	66	86	64	79	62	18	28	
Hacienda Hts	Los Angeles	9	34		300	100	69	96	68	90	67	28	31	
Haiwee	Inyo	16	36.09	117.95	3825	102	65	99	64	95	62	27	15	3700
Half Moon Bay	San Mateo	3	37.5	122.43	60	83	64	76	62	69	59	15	32	3843
Hamilton AFB	Marin	2	38.09	122.50	3	95	69	88	67	81	65	28	27	3311
Hanford	Kings	13	36.29	119.67	242	102	71	99	70	94	68	37	22	2736
Happy Camp RS	Siskiyou	16	41.79	123.37	1150	103	67	97	66	92	65	41	18	4263
Hat Creek PH 1	Shasta	16	40.90	121.55	3015	99	65	96	64	91	62	48	2	5689
Hawaiian Gardens	Los Angeles	8	33.79		75	97	70	91	69	84	67	23	32	
Hawthorne	Los Angeles	8	33.90		70	92	69	85	68	80	66	16	37	
Hayfield Pumps	Riverside	14	33.70	115.63	1370	112	71	108	70	104	68	31	24	1529
Hayward	Alameda	3	37.70	122.12	530	92	66	86	65	81	62	24	26	2909
Healdsburg	Sonoma	2	38.59	122.87	102	102	69	95	68	90	66	37	26	2572
Hemet	Riverside	10	33.70		1655	109	70	104	69	101	67	40	20	
Henshaw Dam	San Diego	10	33.20		2700	99	68	94	67	90	66	38	15	3708
Hercules	Contra Costa	3	38		15	91	66	87	65	82	64	25	30	
Hermosa Beach	Los Angeles	6	33.90		16	92	69	84	68	78	66	12	38	
Hesperia	San Bernardino	14	34.4		3191	105	67	101	65	97	63	38	14	
Hetch Hetchy	Tuolomne	16	38	119.78	3870	93	62	89	61	85	59	32	14	4816
Highland	San Bernardino	10	34.09		1315	106	70	102	69	97	68	36	26	
Hillcrest Center	Kern	16	35.40		500	106	71	102	70	98	68	34	26	
Hillsborough	San Mateo	3	37.59	122.30	352	90	66	82	65	74	64	23	30	
Hilt	Siskiyou	16	42	122.63	2900	97	64	93	62	89	60	39	5	
Hollister	San Benito	4	36.90	121.42	280	96	68	89	67	81	65	30	21	2725
Hollywood	Los Angeles	9	34	118.38	384	96	70	89	69	83	67	20	36	
Home Gardens	Riverside	10	33.9		678	104	70	100	69	92	67	35	26	
Hoopa	Humboldt	2	41	123.67	360	100	67	92	66	87	64	25	23	
Huntington Beach	Orange	6	33.70	117.80	40	91	69	83	67	76	66	14	34	
Huntington Lake	Fresno	16	37.20	119.22	7020	80	55	77	54	73	51	25	3	7632
Huntington Park	Los Angeles	8	34	118.00	175	98	70	90	69	84	67	20	38	
Idlewild	Del Norte	1	41.90	124.00	1250	103	68	96	66	92	65	40	18	
Idria	San Benito	4	36.40	120.67	2650	97	66	92	65	87	62	27	24	3128
Idyllwild	Riverside	16	33.70	116.72	5397	93	62	89	61	84	60	35	9	
Imperial AP	Imperial	15	32.79	115.57	-59	114	74	110	73	106	72	31	26	1060
Imperial Beach	San Diego	7	32.5	117.12	23	87	69	82	68	78	67	10	35	1839
Imperial CO	Imperial	15	32.90		-64	112	73	108	72	104	71	31	29	976
Independence	Inyo	16	36.79		3950	104	61	101	60	97	60	31	12	
Indio	Riverside	15	33.70	116.25	11	115	75	112	75	107	74	30	24	1059
Inglewood	Los Angeles	8	33.90	118.00	105	92	68	85	67	80	65	15	37	
Invokern NAS	Kern	14	35.70	117.82	2440	110	71	106	68	102	66	37	15	2772
Ione	Amador	12	38.3		298	101	70	97	68	91	67	38	23	
Iron Mtn	Shasta	11	34.09	115.13	922	116	75	112	74	108	73	26	29	1251
Irvine	Orange	8	33.70	118.00	50	96	69	88	68	82	67	27	33	
Isla Vista	Santa Barbara	6	34.5		40	90	69	83	67	77	65	20	33	

City	County	Climate Zone	Latitude	Longitude	Elevation	SUMMER							Winter Median of Extremes	HDD*
						0.1% Dry Bulb	0.1 % Wet Bulb	0.5% Dry Bulb	0.5 % Wet Bulb	2% Dry Bulb	2% Wet Bulb	Outdoor Daily Range		
Jess Valley	Modoc	16	41.29		5300	92	59	89	58	84	56	35	-7	7045
John Wayne AP	Orange	6	33.59		115	98	70	91	68	84	67	26	33	1496
Julian Wynola	San Diego	14	33.09	116.80	3650	96	66	91	64	87	62	39	20	4049
Kentfield	Marin	2	38	122.55	120	97	66	91	65	84	63	35	27	3009
Kerman	Fresno	13	36.6		216	105	73	101	71	97	68	34	24	
Kern River PH 1	Kings	13	35.5	118.78	970	106	72	103	71	99	69	26	30	1878
Kern River PH 3	Kern	16	35.79	118.57	2703	103	69	100	68	96	66	34	19	2891
Kettleman Stn	Kings	13	36.09	120.08	508	104	71	100	70	93	68	31	26	2180
King City	Monterey	4	36.20	121.13	320	94	67	90	65	85	64	36	20	2639
Kingsburg	Fresno	13	36.4		297	104	73	101	71	97	69	36	24	
Klamath	Del Norte	1	41.5	124.08	25	79	62	71	60	66	58	18	26	4509
Knights Ferry	Stanislaus	12	37.79	120.57	315	103	70	99	68	94	67	37	19	
La Canada-Flintridge	Los Angeles	9	34.20	118.00	1365	99	69	95	68	88	66	30	32	
La Crescenta-Montrose	Los Angeles	9	34.20	118.00	1565	98	69	94	68	87	66	33	31	
La Habra	Orange	9	33.90	118.00	305	100	69	94	68	87	67	27	30	
La Habra Heights	Los Angeles	9	34		400	100	69	94	68	87	67	27	30	
La Mesa	San Diego	7	32.79	117.02	530	94	70	88	69	84	67	23	34	1567
La Mirada	Los Angeles	9	33.90	118.00	115	99	70	91	69	85	68	26	31	
La Palma	Orange	8	33.90	118.00	75	98	69	92	68	85	67	25	31	
La Puente	Los Angeles	9	34	118.00	320	101	71	97	70	91	69	28	31	
La Quinta	Riverside	15	33.8		400	116	74	112	73	108	72	34	26	
La Riviera	Sacramento	12	38.6		190	104	71	100	70	94	68	32	30	
La Verne	Los Angeles	9	34.09	118.00	1235	101	69	97	68	91	67	34	29	
Ladera Heights	Los Angeles	9	34.1		100	91	67	84	67	79	66	14	37	
Lafayette	Contra Costa	12	37.90	122.13	535	100	69	94	67	87	66	32	24	
Laguna Beach	Orange	6	33.5	117.78	35	91	69	83	68	76	66	18	30	2222
Laguna Niguel	Orange	6	33.6		500	95	67	87	66	81	63	22	33	
Lake Arrowhead	San Bernardino	16	34.2	117.18	5205	90	62	86	61	81	59	26	13	5310
Lake Elsinore	Riverside	10	33.7		1233	105	70	101	69	97	68	39	22	
Lake Los Angeles	Los Angeles	14	34.7		2300	106	68	102	67	98	66	35	12	
Lake Spaulding	Nevada	16	39.29	120.63	5156	89	58	86	57	83	55	34	3	6447
Lakeland Village	Riverside	10	33.6		1233	105	70	101	69	97	68	39	12	
Lakeport	Lake	2	39	122.92	1347	97	67	93	66	88	63	41	20	3728
Lakeshore	Fresno	16	40.90		1075	104	69	100	68	95	66	28	29	
Lakeside	San Diego	10	32.79	117.00	690	95	69	90	68	86	66	20	26	
Lakewood	Los Angeles	8	33.90	118.00	45	98	70	90	68	84	66	22	33	
Lamont	Kern	13	35.29	120.00	500	106	72	102	71	98	69	34	26	
Lancaster	Los Angeles	14	34.70	118.20	2340	106	68	102	67	98	66	35	12	
Larksfield-Wikiup	Sonoma	2	38.5		170	99	69	96	68	92	66	35	24	
Larkspur	Marin	2	37.90	122.50	20	97	68	91	66	84	64	34	28	
Las Plumas	Butte	11	39.70		506	104	71	101	70	96	68	32	24	
Lathrop	San Joaquin	12	37.8		22	103	71	98	69	93	67	35	24	
Lava Beds	Siskiyou	16	41.70	121.52	4770	93	59	89	58	84	56	41	-1	
Lawndale	Los Angeles	8	33.90	118.00	66	92	69	85	68	80	66	16	37	
Le Grand	Merced	12	37.20	120.25	255	101	70	96	68	91	66	38	23	2696
Lemon Grove	San Diego	7	32.70	117.20	437	96	71	88	69	84	67	19	34	
Lemoncove	Tulare	13	36.40	119.03	513	105	72	102	70	98	68	38	25	2513
Lemoore NAS	Kings	13	36.29	119.95	228	104	72	101	71	97	69	37	19	2960
Lennox	Los Angeles	8	33.90	117.75	71	92	69	85	68	80	66	16	37	

City	County	Climate Zone	Latitude	Longitude	Elevation	SUMMER							Winter Median of Extremes	HDD*
						0.1% Dry Bulb	0.1 % Wet Bulb	0.5% Dry Bulb	0.5 % Wet Bulb	2% Dry Bulb	2% Wet Bulb	Outdoor Daily Range		
Lincoln Village	San Joaquin	12	38		12	101	70	96	68	91	67	37	24	
Linda	Yuba	11	39		60	105	72	102	70	97	68	30	27	
Lindsay	Tulare	13	36.20	119.07	395	105	72	101	71	97	69	40	24	2634
Little Panoche	Fresno	13	36.79		677	100	68	94	67	86	66	33	23	
Live Oak	Sutter	11	39.2		75	105	70	102	69	97	69	36	24	
Livermore	Alameda	12	37.70	121.95	490	100	69	95	68	88	67	35	22	3012
Livingston	Merced	12	37.3		165	103	72	100	70	95	68	39	24	
Llano Shawnee	Los Angeles	14	34.5	117.75	3820	104	68	99	67	95	65	31	21	
Lodgepole	Lassen	16	36.59	118.72	6735	84	57	80	56	78	54	26	-4	
Lodi	San Joaquin	12	38.09	121.28	40	101	70	97	68	91	67	38	23	2859
Loma Linda	San Bernardino	10	34	117.50	1150	106	70	103	69	99	67	36	27	
Lomita	Los Angeles	6	33.79	119.00	56	95	69	87	68	81	66	18	33	
Lompoc	Santa Barbara	5	34.90	120.45	95	84	63	77	62	72	60	18	26	2888
Long Beach AP	Los Angeles	6	33.79	118.23	25	99	71	90	69	84	66	21	33	1606
Long Beach	Los Angeles	6	33.70	118.15	34	97	70	88	68	82	65	18	35	
Loomis	Placer	11	38.8		408	107	71	103	70	98	69	39	21	
Los Alamitos NAS	Orange	8	33.79	118.05	30	98	71	89	69	83	68	23	32	1740
Los Altos	Santa Clara	4	37.29	122.00	163	96	68	88	65	80	62	26	28	
Los Altos Hills	Santa Clara	4	37.3		183	93	67	85	64	77	63	25	28	
Los Angeles AP	Los Angeles	6	33.90	118.40	97	91	67	84	67	79	66	14	37	1819
Los Angeles CO	Los Angeles	9	34	118.23	270	99	69	92	68	86	67	21	38	1245
Los Banos	Merced	12	37	120.87	120	100	70	96	68	88	67	42	22	2616
Los Banos Res	Merced	12	37	120.87	407	101	70	97	68	89	67	42	23	
Los Gatos	Santa Clara	4	37.20	121.97	365	98	69	90	67	82	66	32	26	2741
Los Serranos	San Bernardino	10	34.1		714	104	70	100	69	94	68	35	27	
Lucas Vly-Marinwood	Sonoma	2	38.3		20	79	63	74	62	65	59	12	30	
Lucerne Valley	San Bernardino	14	34.5	116.95	2957	105	67	101	66	98	64	38	12	
Lynwood	Los Angeles	8	33.90	118.00	88	98	70	90	69	83	67	21	32	
Madera	Madera	13	37	120.07	268	105	72	101	70	96	68	40	24	2673
Madera Acres	Madera	13	36.9		275	105	72	101	70	96	68	40	24	
Manhattan Beach	Los Angeles	6	33.90	118.00	120	91	69	84	68	79	66	12	38	
Manteca	San Joaquin	12	37.79	121.20	34	102	70	97	68	91	67	37	24	
Manzanita Lake	Shasta	16	40.5	121.57	5850	87	58	84	57	79	55	34	-3	7617
March AFB	Riverside	10	33.90	117.25	1511	103	70	99	68	94	65	34	23	2089
Maricopa	Kern	13	35.09	119.38	675	106	71	102	70	98	68	29	25	2302
Marina	Monterey	3	36.70		20	86	66	77	63	70	61	18	32	
Marina del Rey	Los Angeles	9	34.1		40	91	69	84	68	79	66	12	38	
Markley Cove	Napa	2	38.5	122.12	480	104	70	99	69	93	67	39	23	
Martinez FS	Contra Costa	12	38	122.13	40	99	67	94	66	88	65	36	28	
Marysville	Yuba	11	39.20	121.58	60	105	72	102	70	97	68	36	27	2552
Mather AFB	Sacramento	12	38.59	121.30	96	104	71	100	70	94	68	35	28	
Maywood	Los Angeles	8	34	118.00	170	97	70	91	69	85	67	21	34	
McClellan AFB	Sacramento	12	38.70	121.40	86	105	71	102	70	96	68	35	23	2566
McCloud	Siskiyou	16	41.29	122.13	3300	96	63	93	62	87	60	42	5	5990
McFarland	Kern	13	35.6		350	106	71	102	70	98	69	36	22	
McKinleyville	Humboldt	1	40.9		33	75	61	69	59	65	58	11	28	
Mecca FS	Riverside	15	33.59	116.07	-180	115	75	111	75	107	74	30	24	1185
Mendota	Fresno	13	36.7		169	105	73	101	71	97	68	34	24	
Menlo Park	San Mateo	3	37.40	122.33	65	94	67	86	65	78	63	25	27	

City	County	Climate Zone	Latitude	Longitude	Elevation	SUMMER							Winter Median of Extremes	HDD*
						0.1% Dry Bulb	0.1 % Wet Bulb	0.5% Dry Bulb	0.5 % Wet Bulb	2% Dry Bulb	2% Wet Bulb	Outdoor Daily Range		
Mentone	San Bernardino	10	34.1		1700	106	70	102	69	98	67	34	27	
Merced AP	Merced	12	37.29	120.57	153	103	71	100	69	95	67	36	21	2653
Mill Creek	Tehama	16	35.09	117.02	2940	102	67	97	66	94	65	28	28	
Mill Valley	Marin	3	37.90	122.58	80	97	68	91	66	84	64	28	28	3400
Millbrae	San Mateo	3	37.59	122.35	10	90	66	82	63	74	61	24	30	
Milpitas	Santa Clara	4	37.40	121.90	15	94	68	87	65	79	63	27	27	
Mineral	Tehama	16	40.40	121.60	4911	90	60	87	59	82	57	38	2	7257
Mira Loma	Riverside	10	34		700	105	70	101	69	95	66	34	25	
Miramar AFS	San Diego	7	32.90	117.13	477	97	69	91	68	86	67	22	32	1532
Miramonte	Fresno	13	34.4		750	102	71	97	69	91	68	38	25	
Mission Viejo	Orange	8	33.59	118.00	350	95	67	87	66	81	63	22	33	
Mitchell Caverns	San Berardino	14	34.90		4350	102	64	98	63	94	61	29	21	
Modesto	Stanislaus	12	37.59	121.00	91	102	73	99	70	95	68	36	25	2671
Moffett Field NAS	Santa Clara	4	37.40	122.05	39	89	68	84	66	78	64	23	30	2511
Mojave	Kern	14	35.09	118.18	2735	106	68	102	67	98	66	35	16	3012
Mono Lake	Mono	16	38	119.15	6450	91	58	88	57	84	55	32	4	6518
Monrovia	Los Angeles	9	34.20	118.30	562	100	69	96	68	90	67	30	33	
Montague	Siskiyou	16	41.79	122.47	2648	99	66	95	65	90	63	39	3	5474
Montclair	San Bernardino	10	34	117.00	1220	104	69	100	68	94	66	35	28	
Montebello	Los Angeles	9	34	118.10	205	98	69	93	68	86	67	24	33	
Monterey AP	Monterey	3	36.59	121.87	245	86	65	77	62	70	61	20	30	3556
Monterey CO	Monterey	3	36.59	121.87	345	87	65	78	62	71	61	20	32	3169
Monterey Park	Los Angeles	9	34	118.00	380	99	69	94	68	87	67	23	30	
Monticello Dam	Solano	2	38.5	122.12	505	105	71	100	70	94	68	39	26	
Moraga	Contra Costa	12	37.79	122.17	600	99	68	93	66	86	64	27	21	
Moreno Valley	Riverside	10	33.9		1600	103	70	99	68	94	65	34	27	
Morgan Hill	Santa Clara	4	37.09	120.00	350	100	69	92	68	85	66	25	26	
Morro Bay FD	San Luis Obispo	5	35.40	120.85	115	88	65	82	64	76	62	14	31	
Mount Baldy Notch	San Bernardino	16	34.29	117.62	7735	80	58	76	57	71	54	32	4	
Mount Diablo	Contra Costa	12	37.90	121.92	2100	101	68	96	66	87	65	28	27	4600
Mount Hamilton	Santa Clara	4	37.29	121.65	4206	95	59	88	58	81	56	18	18	4724
Mount Hebron RS	Siskiyou	16	41.79	122.02	4250	92	60	88	59	82	57	42	-10	
Mount San Jacinto	Riverside	16	33.79	116.63	8417	82	56	77	55	73	53	35	-1	
Mount Shasta	Siskiyou	16	41.29	122.32	3535	93	62	89	61	84	59	34	8	5890
Mount Wilson	Los Angeles	16	34.20	118.07	5709	90	63	85	61	79	58	21	15	4296
Mountain Pass	San Bernardino	14	35.5	115.53	4730	100	65	96	64	92	63	29	11	
Mountain View	Santa Clara	4	37.5	121.90	95	93	67	85	64	77	62	25	28	
Muscoy	San Bernardino	10	34.2		1400	105	71	101	69	96	66	37	26	
Nacimiento Dam	San Luis Obispo	4	35.79	120.88	770	100	68	94	66	88	64	35	22	
Napa State Hospital	Napa	2	37.29	122.27	60	94	67	91	67	86	66	29	26	2749
National City	San Diego	7	32.70	117.00	34	87	70	82	68	78	66	10	36	
Needles AP	San Bernardino	15	34.79	114.62	913	117	73	114	72	110	71	26	27	1391
Nevada City	Nevada	11	39.29	121.02	2600	97	66	94	64	88	63	41	14	4900
Newark	Alameda	3	37.5	122.03	10	94	68	89	67	82	65	24	29	
Newhall Soledad	Los Angeles	9	34.40	118.55	1243	104	70	100	68	95	67	42	27	
Newman	Stanislaus	12	37.29	121.05	90	104	71	99	69	93	67	38	22	
Newport Beach	Orange	6	33.59	117.88	10	87	68	80	66	72	65	12	34	1952
Nipomo	San Luis Obispo	5	35		330	90	66	83	64	78	61	23	25	
Norco	Riverside	10	33.90	117.00	700	103	70	99	69	94	67	34	27	

City	County	Climate Zone	Latitude	Longitude	Elevation	SUMMER							Winter Median of Extremes	HDD*
						0.1% Dry Bulb	0.1 % Wet Bulb	0.5% Dry Bulb	0.5 % Wet Bulb	2% Dry Bulb	2% Wet Bulb	Outdoor Daily Range		
North Auburn	Placer	11	38.9		1300	103	69	100	67	95	66	33	25	
North Fork RS	Madera	16	37.20	119.50	2630	98	66	95	65	92	62	36	15	
North Highlands	Sacramento	12	38.59	121.42	45	104	71	100	69	94	67	35	23	2566
North Hollywood	Los Angeles	9	34.20	118.38	619	102	70	97	69	91	67	31	28	
Northridge	Los Angeles	9	34.2		875	101	70	96	69	90	67	36	30	
Norwalk	Los Angeles	8	33.9		97	99	69	90	68	84	67	26	31	
Novato	Marin	2	38.09	122.52	370	94	64	87	63	80	61	30	25	
Oakdale	Stanislaus	12	37.79	120.87	215	102	71	99	69	93	67	37	22	
Oakland AP	Alameda	3	37.70	122.20	6	91	66	84	64	77	62	20	32	2909
Oakland Museum	Alameda	3	37.79	122.17	30	96	68	89	66	82	63	20	31	
Oakley	Contra Costa	12	38		20	102	70	97	68	91	66	34	22	
Oceano	San Luis Obispo	5	35.1		20	93	69	86	64	80	62	18	30	
Oceanside	San Diego	7	33.20	117.40	10	84	69	80	67	74	65	10	33	
Oildale	Kern	13	35.5	119.00	450	106	71	102	70	98	68	34	26	
Ojai	Ventura	9	34.5	119.25	750	102	71	97	69	91	68	38	25	2145
Olivehurst	Yuba	11	39		64	105	72	102	70	97	68	36	27	
Ontario AP	San Bernardino	10	34	117.00	934	105	70	101	69	95	66	34	26	1710
Opal Cliffs	Santa Cruz	3	37		125	94	68	88	66	81	64	28	27	
Orange	Orange	8	33.59	118.00	194	99	70	92	68	85	67	27	33	
Orange Cove	Fresno	13	36.59	119.30	431	104	71	100	69	97	68	38	25	2684
Orangevale	Sacramento	12	38.70	121.20	140	105	72	102	70	96	68	36	24	
Orick Prairie Creek	Humboldt	1	41.40	124.02	161	80	61	75	60	70	59	23	25	4816
Orinda	Contra Costa	12	37.90	122.17	550	99	68	93	66	86	64	32	21	
Orland	Glenn	11	39.79	122.20	254	105	71	102	70	97	68	36	22	2824
Orleans	Humboldt	2	41.29	123.53	403	104	70	97	68	91	66	42	21	3628
Orosi	Tulare	13	36.5		400	104	73	101	70	96	69	36	24	
Oroville East	Butte	11	39.5		171	106	71	104	70	98	69	37	25	
Oroville RS	Butte	11	39.5	121.55	300	106	71	104	70	98	69	37	25	
Otay-Castle Pk	San Diego	7	32.59	117.00	500	87	68	81	66	74	63	10	33	
Oxnard AFB	Ventura	6	34.20	119.18	49	94	69	86	68	79	67	21	30	2068
Pacific Grove	Monterey	3	36.70	122.00	114	87	66	78	63	71	61	19	31	
Pacifica	San Mateo	3	37.59	122.00	13	87	65	79	62	71	60	16	31	
Pacoima	Los Angeles	16	34.26	118.43	895	104	71	99	70	94	68	35	29	
Palermo	Butte	11	39.4		154	106	71	104	70	98	69	37	25	
Palm Desert	Riverside	15	33.70	116.50	200	116	74	112	73	108	72	34	26	
Palm Desert Country	Riverside	15	33.7		243	116	74	112	73	108	72	34	26	
Palm Springs	Riverside	15	33.79	116.53	411	117	74	113	73	109	72	35	26	1109
Palmdale AP	Los Angeles	14	34.59	118.10	2517	107	67	103	67	98	64	33	12	2929
Palmdale CO	Los Angeles	14	34.59	118.10	2596	106	67	102	67	97	64	35	13	2908
Palo Alto	Santa Clara	4	37.5	122.13	25	93	66	85	64	77	62	25	26	2891
Palomar Obsv	San Diego	14	33.40	116.87	5545	90	62	85	61	80	59	22	16	4141
Palos Verdes	Los Angeles	6	33.79	119.00	216	92	69	84	68	78	66	14	38	
Panorama City	Los Angeles	9	34.22	118.45	801	103	71	98	69	92	67	32	28	
Paradise	Butte	11	39.79	121.60	1750	102	69	99	67	94	66	34	25	
Paramount	Los Angeles	8	33.90	117.00	70	98	70	90	69	84	67	22	32	
Parker Res	San Bernardino	15	34.29	114.17	738	115	74	112	73	108	72	26	32	1223
Parkway-South Sacramento	Sacramento	12	38.5		17	104	71	100	70	94	68	32	30	
Parlier	Fresno	13	36.6		320	104	73	101	71	97	68	38	24	
Pasadena	Los Angeles	9	34.20	118.15	864	99	69	94	68	88	67	30	32	1551

City	County	Climate Zone	Latitude	Longitude	Elevation	SUMMER							Winter Median of Extremes	HDD*
						0.1% Dry Bulb	0.1 % Wet Bulb	0.5% Dry Bulb	0.5 % Wet Bulb	2% Dry Bulb	2% Wet Bulb	Outdoor Daily Range		
Paso Robles AP	San Luis Obispo	4	35.70	120.68	815	104	66	97	66	92	65	40	19	2973
Paso Robles CO	San Luis Obispo	4	35.59	120.68	700	102	65	95	65	90	65	44	16	2885
Patterson	Stanislaus	12	37.4		97	101	72	96	70	90	67	36	24	
Pedley	Riverside	10	34		718	105	70	101	69	95	66	34	26	
Pendleton MCB	San Diego	7	33.29	117.30	63	92	68	87	67	81	66	22	34	1532
Pendleton MCB Coast	San Diego	7	33.20	117.4	24	84	69	80	67	75	65	10	39	1782
Perris	Riverside	10	33.79	117.22	1470	105	70	101	69	97	68	39	22	
Petaluma FS 2	Sonoma	2	38.20	122.63	16	98	69	92	67	85	66	31	24	2959
Pico Rivera	Los Angeles	9	34	118.00	180	98	70	91	69	85	67	24	31	
Piedmont	Alameda	3	37.79	122.00	325	96	68	89	66	82	63	23	31	
Pinnacles NM	San Bernardino	14	36.5	121.18	1307	98	68	94	67	89	64	45	20	2956
Pinole	Contra Costa	3	38	122.30	10	91	66	87	65	82	64	25	30	
Pismo Beach	San Luis Obispo	5	35.09	120.62	80	92	66	85	64	80	62	16	30	2756
Pittsburg	Contra Costa	12	38	121.80	50	102	70	97	68	90	67	34	26	
Placentia	Orange	8	33.90	118.00	323	101	69	93	68	87	67	28	30	
Placerville	El Dorado	12	38.70	120.80	1890	101	67	98	66	93	65	42	20	4086
Placerville IFG	El Dorado	12	38.70	120.80	2755	100	66	97	65	92	64	42	23	
Platina	Shasta	11	40.40	122.88	2260	96	65	92	64	87	61	36	13	
Pleasant Hill	Contra Costa	12	37.90	122.00	102	96	68	93	67	88	65	34	25	
Pleasanton	Alameda	12	37.59	121.78	350	97	68	94	67	89	65	35	24	
Point Arena	Mendocino	1	38.90	123.73	100	76	62	72	60	67	58	19	29	4747
Point Arguello	Santa Barbara	5	34.59	120.67	76	75	64	71	63	65	59	17	29	3826
Point Mugu	Ventura	6	34.09	119.12	14	88	68	81	67	75	66	15	33	2328
Point Piedras Blancas	San Luis Obispo	5	35.70	121.28	59	73	60	67	59	61	57	10	36	3841
Pomona Cal Poly	Los Angeles	9	34.09	117.82	740	102	70	98	69	93	67	36	27	1971
Port Chicago ND	Contra Costa	12	38	122.02	50	98	69	94	68	88	66	34	28	
Port Hueneme	Ventura	6	34.20	119.00	13	88	68	81	67	75	66	15	33	2334
Porterville	Tulare	13	36.09	119.02	393	106	71	102	70	97	69	36	25	2456
Portola	Plumas	16	39.79	120.47	4850	92	63	89	61	84	59	48	-9	7111
Posey 3 E	Tulare	13	35.79	119.00	4960	89	62	86	61	82	59	26	9	
Potter Valley PH	Mendocino	2	39.40	123.13	1015	101	68	96	67	89	65	40	20	3276
Poway Valley	San Diego	10	33	117.00	500	100	70	94	69	89	68	26	29	
Priest Valley	Monterey	4	36.20	120.70	2300	97	66	93	65	88	63	34	13	4144
Prunedale	Monterey	3	36.6		260	86	66	83	65	79	62	20	26	
Quartz Hill	Los Angeles	14	34.6		2428	106	68	102	67	98	66	35	12	
Quincy	Plumas	16	39.90	120.93	3409	101	64	98	63	93	62	45	1	5763
Ramona Spaulding	San Diego	10	33.09	116.82	1480	103	70	97	69	92	68	40	22	
Rancho Bernardo	San Diego	10	33.02	117.06	500	96	69	91	68	85	67	26	29	
Rancho Cordova	Sacramento	12	38.59	121.30	190	104	72	100	69	94	68	35	26	
Rancho Mirage	Riverside	15	33.8		248	117	74	113	73	109	72	33	26	
Rancho Palos Verdes	Los Angeles	6	33.70	118.17	216	92	69	84	68	78	66	14	38	
Rancho San Diego	San Diego	10	32.8		300	94	69	86	68	82	66	30	34	
Rancho Santa	Orange	8	33.6		116	95	67	87	66	81	63	22	33	
Randsburg	Kern	14	35.29	117.65	3570	105	67	102	66	97	65	30	19	2922
Red Bluff AP	Tehama	11	40.20	122.25	342	107	70	104	69	98	66	31	24	2688
Redding FS 4	Shasta	11	40.59	122.40	470	107	69	103	68	97	67	30	26	2544
Redlands	San Bernadino	10	34.09	117.18	1318	106	70	102	69	98	67	34	27	1993
Redondo Beach	Los Angeles	6	33.79	118.32	45	92	69	84	68	78	66	12	37	
Redwood City	San Mateo	3	37.5	122.23	31	90	67	86	66	81	64	28	28	2599

City	County	Climate Zone	Latitude	Longitude	Elevation	SUMMER							Winter Median of Extremes	HDD*
						0.1% Dry Bulb	0.1 % Wet Bulb	0.5% Dry Bulb	0.5 % Wet Bulb	2% Dry Bulb	2% Wet Bulb	Outdoor Daily Range		
Reedley	Fresno	13	36.59	119.70	344	104	71	101	70	96	68	40	24	
Reseda	Los Angeles	9	34.2		736	103	71	98	69	92	67	32	28	
Rialto	San Bernardino	10	34.09	117.00	1254	105	70	101	69	96	66	35	28	
Richardson Grove	Humbolt	2	40	123.78	500	96	67	92	66	87	64	28	25	
Richmond	Contra Costa	3	37.90	121.60	55	88	65	84	64	77	62	17	31	2684
Ridgecrest	Kern	14	35.59	117.80	2340	110	70	106	68	102	66	35	15	
Rio Del Mar	Santa Cruz	3	37		50	94	67	88	66	83	63	30	27	
Rio Linda	Sacramento	12	38.6		86	104	72	100	70	94	68	32	28	
Ripon	San Joaquin	12	37.7		61	102	70	97	68	91	67	37	23	
Riverbank	Stanislaus	12	37.7		133	102	73	99	70	95	68	36	25	
Riverside Exp Sta	Riverside	10	34	117.38	986	106	71	102	69	97	67	36	29	
Riverside FS 3	Riverside	10	34	117.38	840	104	70	100	69	95	65	37	27	1818
Rocklin	Placer	11	38.79	121.23	239	108	72	104	70	99	69	39	20	3143
Rodeo	Contra Costa	3	38.1		15	93	67	90	66	84	64	23	28	
Rohnert Park	Sonoma	2	38.40	122.55	106	99	69	96	68	92	66	33	24	
Rolling Hills	Los Angeles	6	33.59	119.00	216	92	69	84	68	78	66	15	38	
Rosamond	Kern	14	34.8		2326	106	68	102	67	98	66	35	16	
Roseland	Sonoma	2	38.4		167	99	69	96	68	92	66	35	24	
Rosemead	Los Angeles	9	34	118.00	275	98	70	90	69	84	67	27	30	
Rosemont	Sacramento	12	38.3		190	104	71	100	70	94	68	32	30	
Roseville	Placer	11	38.70	121.22	160	105	71	102	70	96	68	36	24	
Rossmoor	Orange	8	33.79		20	92	67	85	64	79	62	19	32	
Rowland Hts	Los Angeles	9	33.90	118.00	540	99	70	93	69	86	68	27	29	
Rubidoux	Riverside	10	34	117.00	792	106	71	102	70	97	68	36	27	
Sacramento AP	Sacramento	12	38.5	121.50	17	104	72	100	70	94	68	35	26	2843
Sacramento CO	Sacramento	12	38.59	121.50	84	104	71	100	70	94	68	32	30	
Saint Helena	Napa	2	38.5	122.47	225	102	70	98	69	93	67	40	22	2878
Saint Mary's College	Contra Costa	12	37.79	122.12	623	98	69	93	68	86	66	28	21	3543
Salinas 3 E	Monterey	3	36.70	121.60	85	86	66	83	65	79	62	20	26	
Salinas AP	Monterey	3	36.70	121.60	69	85	67	82	65	78	62	20	28	2959
Salt Springs PH	Amador/Calavaras	16	38.5	120.22	3700	95	62	92	61	87	59	27	19	3857
Salyer RS	Trinity	16	40.90	123.57	623	102	69	95	67	87	64	33	22	
San Anselmo	Marin	2	38	122.00	50	95	67	89	66	82	65	32	26	
San Antonio Canyon	Los Angeles	16	34.20	117.67	2394	100	68	96	67	90	65	33	29	
San Antonio Mission	Monterey	4	36	117.67	1060	99	69	94	68	88	67	28	19	
San Bernardino	San Bernardino	10	34.1	117.32	1125	106	70	102	69	98	68	39	27	1777
San Bruno	San Mateo	3	37.7	122.42	20	86	66	80	64	73	62	23	30	3042
San Carlos	San Mateo	3	37.5		26	92	67	88	65	82	63	28	28	
San Clemente	Orange	6	33.40	118.58	208	91	68	85	67	80	66	12	31	
San Diego AP	San Diego	7	32.70	117.17	13	88	70	83	69	78	68	13	38	1507
San Dimas	Los Angeles	9	34		955	102	70	98	69	92	67	35	30	
San Fernando	Los Angeles	9	34.29	118.47	977	104	71	99	70	94	68	37	30	1800
San Francisco AP	San Francisco	3	37.59	122.38	8	89	66	83	64	74	61	20	31	3042
San Francisco CO	San Francisco	3	37.79	122.42	52	84	65	79	63	71	60	14	38	3080
San Gabriel FD	Los Angeles	9	34.09	118.10	450	99	70	94	69	88	68	30	30	1532
San Gregorio 2 SE	San Mateo	3	37.29		275	87	66	81	63	74	61	30	27	
San Jacinto	Riverside	10	33.79	116.97	1535	110	70	105	69	102	68	41	20	2376
San Jose	Santa Clara	4	37.40	121.93	67	94	68	86	66	78	64	26	29	2438
San Leandro	Alameda	3	37.70		45	89	67	83	64	76	62	22	28	

City	County	Climate Zone	Latitude	Longitude	Elevation	SUMMER							Winter Median of Extremes	HDD*
						0.1% Dry Bulb	0.1 % Wet Bulb	0.5% Dry Bulb	0.5 % Wet Bulb	2% Dry Bulb	2% Wet Bulb	Outdoor Daily Range		
San Lorenzo	Alameda	3	37.70		45	89	67	83	64	76	62	23	28	
San Luis Dam	Merced	12	37.09		277	97	68	91	66	86	64	32	25	
San Luis Obispo	San Luis Obispo	5	35.29	120.72	320	94	63	87	63	81	62	26	30	2498
San Marcos	San Diego	10	33.1		567	97	69	98	68	84	67	29	26	
San Marino	Los Angeles	9	34.20		300	100	69	95	68	88	66	28	30	
San Mateo	San Mateo	3	37.5	122.30	21	92	67	84	65	76	63	24	31	2655
San Nicholas Island	Ventura	6	33.20	119.47	504	85	66	78	65	70	64	11	39	2454
San Pablo	Contra Costa	3	37.59		30	90	65	84	63	77	61	17	29	
San Pedro	Los Angeles	6	33.70	118.27	10	92	69	84	68	78	66	13	35	1819
San Rafael	Marin	2	38	122.55	40	96	67	90	65	83	63	29	30	2440
San Ramon	Contra Costa	12	37.7		360	99	69	93	67	86	65	35	24	
Sandberg	Los Angeles	16	34.79	118.73	4517	95	63	91	61	87	59	32	17	4427
Sanger	Fresno	13	36.70		364	105	72	101	70	96	68	37	24	
Santa Ana FS	Orange	8	33.79	117.83	115	98	70	91	68	84	67	26	33	1430
Santa Barbara AP	Santa Barbara	6	34.40	119.83	9	90	69	83	67	77	65	20	29	2487
Santa Barbara CO	Santa Barbara	6	34.40	119.68	5	91	69	84	67	78	65	22	33	1994
Santa Clara Univ	Santa Clara	4	37.40	121.93	88	90	67	87	65	82	63	30	29	2566
Santa Clarita	Los Angeles	9	34.4		1300	103	71	98	70	93	68	36	30	
Santa Cruz	Santa Cruz	3	37	122.02	125	94	68	88	66	81	64	28	27	3136
Santa Fe Springs	Los Angeles	9	33.90		280	99	69	90	68	84	67	24	31	
Santa Maria AP	Santa Barbara	5	34.90	120.45	236	90	66	83	64	78	61	23	25	3053
Santa Monica	Los Angeles	6	34	118.50	15	85	67	78	66	72	64	15	39	1873
Santa Paula	Ventura	9	34.40		263	101	71	94	70	87	68	28	28	2030
Santa Rosa	Sonoma	2	38.5	122.82	167	99	69	96	68	92	66	35	24	2980
Santee	San Diego	10	32.79		400	96	69	91	68	87	67	20	25	
Saratoga	Santa Clara	4	37.29		500	96	67	88	66	80	65	31	27	
Sausalito	Sonoma	3	37.90		10	85	66	80	65	73	63	12	30	
Sawyer's Bar RS	Siskiyou	16	41.29		2169	100	66	95	65	88	62	38	14	4102
Scotia	Humboldt	1	40.5	124.37	139	78	61	74	60	69	58	19	28	3954
Scotts Valley	Santa Cruz	3	37		400	94	68	88	66	81	64	28	27	
Seal Beach	Orange	6	33.79	118.08	21	94	69	86	68	80	65	15	35	1519
Seaside	Monterey	4	36.59		17	85	66	79	64	73	62	20	30	
Sebastapol	Sonoma	2	38.4		102	99	69	96	68	92	66	35	24	
Selma	Fresno	13	36.59		305	104	73	101	71	97	68	38	24	
Sepulveda	Los Angeles	9	34.2		818	103	71	98	69	92	67	32	28	
Shafter	Kern	13	35.5	119.17	345	106	71	102	70	98	68	28	24	2185
Shasta Dam	Shasta	16	40.70		1076	105	69	101	68	95	67	27	29	2943
Shelter Cove	Humboldt	1	40	124.07	110	80	61	73	60	68	57	15	34	
Sherman Oaks	Los Angeles	9	34.2		657	103	71	98	69	92	67	28	29	
Sierra City	Sierra	16	39.59	120.12	4230	96	62	93	61	89	59	43	12	
Sierra Madre	Los Angeles	9	34.20		1153	102	69	96	68	90	67	27	32	
Sierraville RS	Sierra	16	39.59	120.37	4975	94	60	91	59	86	57	44	-10	6893
Signal Hill	Los Angeles	6	33.5		100	99	70	90	69	84	66	19	35	
Simi Valley	Ventura	9	34.40		500	98	70	93	68	87	66	30	28	
Solana Beach	San Diego	7	33		15	87	68	83	67	77	65	10	35	
Soledad	Monterey	3	36.4		200	90	67	87	65	82	64	23	24	
Sonoma	Sonoma	2	38.29		70	101	70	96	69	90	67	40	22	2998
Sonora RS	Tuolumne	12	38	120.38	1749	103	68	100	67	95	66	34	20	3537
Soquel	Santa Cruz	3	37		50	94	67	88	66	81	63	24	27	

City	County	Climate Zone	Latitude	Longitude	Elevation	SUMMER							Winter Median of Extremes	HDD*
						0.1% Dry Bulb	0.1 % Wet Bulb	0.5% Dry Bulb	0.5 % Wet Bulb	2% Dry Bulb	2% Wet Bulb	Outdoor Daily Range		
South El Monte	Los Angeles	9	34		270	101	72	97	70	91	68	28	31	
South Entr Yosemite	Tuolumne	16	37.5	119.63	5120	92	61	88	60	84	59	36	8	5789
South Gate	Los Angeles	8	33.90		120	97	70	90	69	84	67	21	32	
South Laguna	Orange	6	33.6		100	91	69	83	68	78	66	18	30	
South Lake Tahoe	El Dorado	16	38.90		6200	85	56	82	55	71	54	33	-2	
South Oroville	Butte	11	39.5		174	106	71	104	70	98	69	37	25	
South Pasadena	Los Angeles	9	34		657	99	69	94	68	88	67	30	31	
South San Francisco	San Mateo	3	37.70		10	87	67	81	64	72	62	20	32	
South San Gabriel	Los Angeles	9	34.1		450	99	70	94	69	88	68	73	30	
South Whittier	Los Angeles	9	33.90		300	100	70	92	69	84	68	30	31	
South Yuba City	Sutter	11	39.1		59	105	69	101	69	96	68	36	24	
Spring Valley	San Diego	10	32.70		300	94	69	86	68	82	66	30	34	
Squaw Valley	Placer	16	39.20		6235	88	57	85	56	80	54	40	-10	
Squirrel Inn	San Bernardino	14	34.20	117.23	5680	86	61	82	60	77	58	23	12	5175
Stanford	Santa Clara	4	37.5		23	93	66	85	64	77	62	25	26	
Stanton	Orange	8	33.59		45	98	69	91	68	84	67	24	31	
Stockton AP	San Joaquin	12	37.90	121.25	22	103	71	98	69	93	67	35	24	2806
Stockton FS 4	San Joaquin	12	38	121.32	12	101	70	96	68	91	67	37	24	2846
Stony Gorge Res	Glenn	11	39.59	122.53	791	104	70	99	69	93	67	37	21	3149
Strawberry Valley	Tuolumne	16	39.59		3808	96	63	93	62	88	60	32	14	5120
Studio City	Los Angeles	9	34.28	118.39	620	102	70	97	69	91	67	31	28	
Suisun City	Solano	12	38.2		72	103	71	98	69	91	66	35	24	
Sun City	Riverside	10	33.7		1420	105	70	101	69	97	68	39	22	
Sunland	Los Angeles	9	34.29		1460	107	71	102	70	96	68	36	28	
Sunnyvale	Santa Clara	4	37.29	122.03	97	96	68	88	66	80	64	26	29	2511
Susanville AP	Lassen	16	40.40	120.57	4148	98	62	95	61	90	59	38	-1	6233
Taft	Kern	13	35.1		987	106	71	102	70	98	68	34	26	
Tahoe City	Placer	16	39.20	120.13	6230	84	56	81	55	76	53	36	2	8085
Tahoe Valley AP	Placer	16	38.90		6254	85	56	82	55	77	53	38	-5	
Tamalpais-Homestead Valley	Marin	3	37.9		25	97	68	91	66	84	64	28	28	
Tarzana	Los Angeles	6	34.18	118.55	800	104	71	99	69	93	68	27	27	
Tehachapi	Kern	16	35.09		3975	97	66	93	65	89	64	33	13	4494
Tejon Rancho	Los Angeles	16	35	118.75	1425	107	71	103	70	99	68	27	24	2602
Temecula	Riverside	10	33.5		1006	101	69	96	68	91	67	34	24	
Temple City	Los Angeles	9	34.09		403	101	70	95	69	89	68	27	30	
Termo	Los Angeles	16	40.90		5300	95	60	92	59	87	57	37	-17	
Thermal AP	Riverside	15	33.59		-112	114	74	110	74	106	74	29	26	1154
Thermalito	Butte	11	37.9		25	106	71	104	70	98	69	37	25	
Thousand Oaks	Ventura	9	34.20		810	98	69	93	68	88	67	30	27	
Three Rivers PH 1	Tulare	13	36.5		1140	105	70	102	69	98	67	38	24	2642
Tiburon	Marin	3	37.90		90	85	66	80	65	73	63	12	30	
Tiger Creek PH	Amador	12	38.5	120.48	2355	100	66	96	55	92	63	36	20	3795
Torrance	Los Angeles	6	33.79	118.33	110	93	69	86	68	80	66	18	32	1859
Tracy Carbona	San Joaquin	12	37.70		140	102	70	97	68	90	67	38	24	2704
Tracy Pumps	San Joaquin	12	37.79		61	104	71	99	69	92	68	39	23	
Travis AFB	Sonoma	12	38.29	121.93	72	103	71	98	69	91	66	35	24	2725
Trinity Dam	Trinity	16	40.79		2500	99	65	94	64	88	62	37	17	
Trona	San Bernardino	14	35.79	117.38	1695	113	72	109	70	105	68	35	18	2415

City	County	Climate Zone	Latitude	Longitude	Elevation	SUMMER							Winter Median of Extremes	HDD*
						0.1% Dry Bulb	0.1 % Wet Bulb	0.5% Dry Bulb	0.5 % Wet Bulb	2% Dry Bulb	2% Wet Bulb	Outdoor Daily Range		
Truckee RS	Nevada	16	39.29	120.18	5995	90	58	87	57	82	55	40	-10	8230
Tujunga	Los Angeles	9	34.29		1820	103	70	99	69	94	67	36	20	
Tulare	Tulare	13	36.20		290	105	72	101	71	96	69	39	24	
Tulelake	Siskiyou	16	42		4035	92	60	88	59	83	57	41	-5	6854
Turlock	Stanislaus	12	37.5		100	104	72	100	70	95	68	40	24	
Turntable Creek	Plumas	16	40.79		1067	105	69	101	68	95	66	28	24	
Tustin Foothills	Orange	8	33.8		500	99	71	92	69	85	68	27	28	
Tustin Irvine Rch	Orange	8	33.70	117.78	118	99	71	92	69	85	68	27	28	1856
Twentynine Palms	San Bernardino	14	34.09	116.05	1975	110	71	107	70	103	69	31	21	1973
Twin Lakes	Mono	16	38.70		7829	73	49	64	47	57	46	30	-7	9196
Twitchell Dam	San Luis Obispo	5	35		582	99	70	93	68	88	66	26	26	
UCLA	Los Angeles	9	34.09		430	93	69	86	68	80	66	20	39	1509
Ukiah	Mendocino	2	39.20	123.20	623	100	70	97	69	92	68	42	22	2958
Union City	Alameda	3	37.6		5	90	67	87	66	81	63	20	25	
Upland	San Bernardino	10	34.1		1605	102	69	98	68	92	66	31	29	2175
Upper Lake RS	Lake	2	39.20	122.95	1347	98	68	95	67	91	64	39	18	
Upper San Leandro	Alameda	3	37.79		394	93	67	87	66	80	63	22	28	
Vacaville	Solano	12	38.40		105	103	71	100	70	94	68	40	23	2788
Valinda	Los Angeles	9	34		340	102	70	98	69	92	68	28	31	
Valle Vista	Riverside	10	33.8		1655	109	70	104	69	101	67	40	20	
Vallejo	Solano	3	38.09		85	93	67	90	66	84	64	23	28	
Valyermo RS	Los Angeles	14	34.5		3600	100	67	96	66	91	65	41	12	3870
Van Nuys	Los Angeles	9	34.2		708	103	71	98	69	92	67	30	28	
Vandenburg AFB	Santa Barbara	5	34.70	122.80	368	85	62	77	61	71	60	16	30	3451
Ventura	Ventura	6	34.29		341	89	68	82	67	76	66	15	29	
Victorville Pumps	San Bernardino	14	34.5		2858	105	67	101	65	97	62	39	14	3191
View Park	Los Angeles	6, 8	34		300	95	69	88	68	78	66	18	36	
Villa Park	Orange	8	33.8		300	99	70	92	68	85	67	27	33	
Vincent	Los Angeles	14	34.5		3135	105	67	101	65	96	64	33	10	
Visalia	Tulare	13	36.29		325	103	71	100	70	96	69	38	25	2459
Vista	San Diego	7	33.20		510	96	69	90	68	85	67	16	30	
Volta PH	Merced	12	40.5		2220	101	66	98	65	93	63	33	21	
Walnut	Los Angeles	9	34		550	101	70	97	69	92	69	30	28	
Walnut Creek	Contra Costa	12	37.90		245	100	69	94	67	87	66	32	23	
Walnut Grove	Sacramento	12	38.20		23	102	70	98	69	92	68	37	24	
Walnut Park	Los Angeles	8	33.9		45	92	69	84	68	78	66	12	37	
Warner Springs	San Diego	14	33.29		3180	100	67	95	66	91	65	40	15	3591
Wasco	Kern	13	35.59		333	105	71	101	70	97	68	36	23	2466
Watsonville	Santa Cruz	3	36.90		95	86	66	82	64	79	61	22	28	3418
Weaverville RS	Trinity	16	40.70		2050	100	67	95	66	89	63	46	10	4992
Weed FD	Siskiyou	16	41.40		3590	92	63	89	62	84	59	35	4	
West Athens	Los Angeles	8	33.9		25	92	69	85	68	80	66	18	32	
West Carson	Los Angeles	6	33.79		100	92	69	87	68	81	66	18	32	
West Compton	Los Angeles	8	33.9		71	97	69	90	68	83	67	21	33	
West Covina	Los Angeles	9	34		365	102	70	98	69	92	68	34	29	
West Hollywood	Los Angeles	9	34		290	95	70	89	69	82	67	20	38	
West Pittsburg	Contra Costa	12	38		12	102	70	97	68	90	67	34	26	
West Puente Valley	Los Angeles	9	34	117.93	500	101	71	97	70	91	68	26	31	
West Sacramento	Yolo	12	38.6		19	104	72	100	70	94	68	35	26	

City	County	Climate Zone	Latitude	Longitude	Elevation	SUMMER							Winter Median of Extremes	HDD*
						0.1% Dry Bulb	0.1 % Wet Bulb	0.5% Dry Bulb	0.5 % Wet Bulb	2% Dry Bulb	2% Wet Bulb	Outdoor Daily Range		
West Whittier-Los	Los Angeles	9	34		320	99	69	90	68	84	67	24	31	
Westlake Village	Los Angeles	9	34.2		750	103	71	99	70	94	69	26	26	
Westminster	Orange	6	33.79		38	95	70	88	68	81	67	23	33	
Westmont	Los Angeles	8	33.9		110	96	70	89	69	83	67	20	36	
Whiskeytown Res	Shasta	11	40.59		1295	105	69	101	68	96	67	31	25	
White Mtn 1	Mono	16	37.5		10150	73	49	69	47	65	45	37	-15	
White Mtn 2	Mono	16	37.59		12470	61	42	58	41	54	40	38	-20	
Whittier	Los Angeles	9	34		320	99	69	90	68	84	67	24	31	
Wildomar	Riversie	10	33.6		1255	103	70	99	69	94	68	36	23	
Wildrose RS	Invo	16	36.29		4100	100	64	97	63	93	61	33	13	
Williams	Colusa	11	39.20		85	104	71	100	70	94	68	36	24	
Willits	Mendocino	2	39.40	123.32	1350	95	66	89	65	82	62	38	18	
Willow Brook	Los Angeles	8	33.90		60	97	70	90	69	83	67	21	35	
Willow Creek	Humboldt	2	41	123	461	104	70	98	68	92	66	35	22	
Willows	Colusa	11	39.5		140	104	71	100	70	94	68	36	22	2836
Windsor	Sonoma	2	38.5		130	99	69	96	68	92	66	35	24	
Winters	Yolo	12	38.5		135	104	71	99	70	93	68	38	24	2593
Winton	Merced	12	37.4		168	103	71	100	69	95	67	36	21	
Woodcrest	Riverside	10	33.9		1500	104	70	100	69	95	65	37	27	
Woodfords	Alpine	16	38.79		5671	92	59	89	58	84	56	32	0	6047
Woodlake	Tulare	13	36.3		500	103	71	100	70	96	69	38	25	
Woodland	Yolo	12	38.70		69	106	72	101	71	96	69	40	25	2708
Woodland Hills	Los Angeles	9	34.2		944	104	71	99	70	93	68	32	26	
Woodside	San Mateo	3	37.5		75	92	67	84	66	76	63	24	22	
Yorba Linda	Orange	8	33.90		350	102	70	94	69	88	68	31	30	1643
Yosemite Park Hq	Mariposa	16	37.70		3970	97	63	94	62	90	60	38	11	4785
Yreka	Siskiyou	16	41.70		2625	99	66	95	65	90	64	39	8	5395
Yuba City	Sutter	11	39.09		70	105	69	101	69	96	68	36	24	
Yucaipa	San Bernardino	10	34		2600	106	68	102	67	98	65	35	27	
Yucca Valley	San Bernardino	14	34.2		2600	108	71	105	70	101	69	32	19	

***Heating Degree Day** is a unit, based on temperature difference and time, used in estimating fuel consumption and specifying nominal annual heating load of a building. For any one day when the mean temperature is less than 65°F (18°C), there exist as many degree days as there are Fahrenheit degrees difference in temperature between mean temperature for the day and 65°F (18°C).

Appendix D:

Glossary

Appendix D: Glossary

Appendix D: Glossary

Terms, phrases, words, and their derivatives in Part 6 of the California State Building Code shall be defined as specified in Section 101 of that Code. Terms, phrases, words, and their derivatives not found in Section 101 shall be defined as specified in Title 24, Part 2, Chapter 2-4 of the California Code of Regulations. Terms, phrases, words, and their derivatives not found in either Title 24, Part 6 or Chapter 2-4 shall be defined as specified in Part II, Chapter 4 of the Uniform Building Code. Where terms, phrases, words, and their derivatives are not defined in any of the references above, they shall be defined as specified in Webster's Third New International Dictionary of the English Language, Unabridged (1987 ed.), unless the context requires otherwise.

ACCA is the Air-Conditioning Contractors of America.

ACCESSIBLE is having access thereto, but which first may require removal or opening of access panels, doors, or similar obstructions.

ADDITION is any change to a building that increases conditioned floor area and conditioned volume.

AIR-TO-AIR HEAT EXCHANGER is a device which will reduce the heat losses or gains which occur when a building is mechanically ventilated, by transferring heat between the conditioned air being exhausted and the unconditioned air being supplied.

ALTERATION is any change to a building's water heating system, space conditioning system, lighting system, or envelope that is not an addition.ALTERNATIVE CALCULATION METHODS (ACMs) are the Commission's Public Domain Computer Programs, one of the Commission's Simplified Calculation Methods, or any other calculation method approved by the Commission.

ALTERNATIVE CALCULATION METHOD (ACM) is a calculation method used to determine compliance with the building energy efficiency standards other than the reference method which (for the nonresidential building standards) uses the reference computer program, DOE 2.1E, as the computational engine. The current requirements limit ACMs to computer programs since there are specific requirements in this manual for required inputs, automated restrictive outputs, and automatic default assumptions.

ANNUAL FUEL UTILIZATION EFFICIENCY (AFUE) is a measure of the percentage of heat from the combustion of gas or oil which is transferred to the space being heated during a year, as determined using the applicable test method in the Appliance Efficiency Regulations or Section 112.

ANNUNCIATED is a visual signaling device that indicates the on, off, or other status of a load.

ANSI is the American National Standards Institute.

APPLIANCE EFFICIENCY REGULATIONS are the regulations in Title 20, Sections 1601 et. seq. of the California Code of Regulations.

APPROVED BY THE COMMISSION means approval under Section 25402.1 of the Public Resources Code.

APPROVED CALCULATION METHOD (See ALTERNATIVE CALCULATION METHODS).

ARI is the Air-conditioning and Refrigeration Institute.

ASHRAE is the American Society of Heating, Refrigerating, and Air-conditioning Engineers.

ASME is the American Society of Mechanical Engineers.

ASTM is the American Society for Testing and Materials.

ATRIUM is an opening through two or more floor levels other than enclosed stairways, elevators, hoistways, escalators, plumbing, electrical, air-conditioning, or other equipment which is enclosed space and not defined as a mall.

ATTIC is an enclosed unconditioned space directly below the roof and above the ceiling.

AUTOMATIC is capable of operating without human intervention.

AUTOMATIC TIME SWITCH CONTROL DEVICES are devices capable of automatically turning loads off and on based on time schedules.

BELOW GRADE WALL is the portion of a wall, enclosing conditioned space, that is below the grade line.

BUILDING is any structure or space for which a permit is sought.

BUILDING ENVELOPE is the ensemble of exterior and demising partitions of a building that enclose conditioned space.

CAPTIVE-KEY OVERRIDE is a type of lighting control in which the key that activates the override cannot be released when the lights are in the on position.

CEILING is the interior upper surface of a space separating it from the attic, which has a slope less than 60 degrees from horizontal.

CERTIFYING ORGANIZATION is an independent organization recognized by the Commission to certify manufactured devices for performance values in accordance with procedures adopted by the Commission.

CLIMATE CONTROL SYSTEM (See SPACE CONDITIONING SYSTEM).

CLIMATE ZONES are the 16 geographic areas of California for which the Commission has established typical weather data, prescriptive packages and energy budgets. Climate zone boundary descriptions are in the document "California Climate Zone Descriptions" (July 1995), incorporated herein by reference. Figure 1-A is an approximate map of the 16 climate zones.

CMC means the 1998 California Mechanical Code prior to the effective date designated by the California Building Standards Commission for the 2000 California Mechanical Code. On and after the effective designated by the California Building Standards Commission for the 2000 California Mechanical Code, CMC shall mean the 2000 California Mechanical Code.

COEFFICIENT OF PERFORMANCE (COP), COOLING, is the ratio of the rate of net heat removal to the rate of total energy input, calculated under designated operating conditions and expressed in consistent units, as determined using the applicable test method in the Appliance Efficiency Regulations or Section 112.

COEFFICIENT OF PERFORMANCE (COP), HEATING, is the ratio of the rate of net heat output to the rate of total energy input, calculated under designated operating conditions and expressed in consistent units, as determined using the applicable test method in the Appliance Efficiency Regulations or Section 112.

COMMISSION is the California State Energy Resources Conservation and Development Commission.

COMPLETE BUILDING is an entire building with one occupancy making up 90 percent of the conditioned floor area (see also ENTIRE BUILDING).

CONDITIONED FLOOR AREA (CFA) is the floor area (in square feet) of enclosed conditioned space on all floors of a building, as measured at the floor level of the exterior surfaces of exterior walls enclosing the conditioned space.

CONDITIONED SPACE is space in a building that is either directly conditioned or indirectly conditioned.
CONDITIONED VOLUME is the total volume (in cubic feet) of the conditioned space within a building.

CONSTRUCTION LAYERS are layers of material that make up a construction assembly.

COOL ROOF is a roofing material with high solar reflectance and high emittance that reduces heat gain through the roof.

COOLING EQUIPMENT is equipment used to provide mechanical cooling for a room or rooms in a building.

COURTYARD is an open space through one or more floor levels surrounded by walls within a building.

COVERED PRODUCT is an appliance regulated by the efficiency standards established under the National Appliance Energy Conservation Act, 42 U.S.C. Section 6291 et seq.

CRAWL SPACE is a space immediately under the first floor of a building adjacent to grade.

CTI is the Cooling Tower Institute.

C-VALUE (also known as C-FACTOR) is the time rate of heat flow through unit area of a body induced by a unit temperature difference between the body surfaces, in Btu/hr-ft^2 -^{o}F. It is not the same as K-value or K-factor.

DAYLIT AREA is the space on the floor that is the larger of (a) plus (b), or (c);

(a) For areas daylit by vertical glazing, the daylit area has a length of 15 feet, or the distance on the floor, perpendicular to the glazing, to the nearest 60-inch or higher opaque partition, whichever is less; and a width of the window plus either 2 feet on each side, the distance to an opaque partition, or one-half the distance to the closest skylight or vertical glazing, whichever is least.

(b) For areas daylit by horizontal glazing, the daylit area is the footprint of the skylight plus, in each of the lateral and longitudinal dimensions of the skylight, the lesser of the floor-to-ceiling height, the distance to the nearest 60-inch or higher opaque partition, or one-half the horizontal distance to the edge of the closest skylight or vertical glazing.

(c) The daylit area calculated using a method approved by the Commission.

DECORATIVE GAS APPLIANCE is a gas appliance that is designed or installed for visual effect only, cannot burn solid wood, and simulates a fire in a fireplace.

DEGREE DAY, HEATING is a unit, based upon temperature difference and time, used in estimating fuel consumption and specifying nominal annual heating load of a building. For any one day, when the mean temperature is less than 65°F, there exist as many degree days as there are Fahrenheit degrees difference in temperature between the mean temperature for the day and 65°F. The number of degree days for specific geographical locations are those listed in the Residential Manual. For those localities not listed in the Residential Manual the number of degree days is as determined by the applicable enforcing agency.

DEMISING PARTITIONS are barriers that separate conditioned space from enclosed unconditioned space.

DEMISING WALL is a wall that is a demising partition.

DENSITY is the mass per unit volume of a construction material as documented in an ASHRAE handbook, a comparably reliable reference or manufacturer's literature.

DESIGN CONDITIONS are the parameters and conditions used to determine the performance requirements of space conditioning systems. Design conditions for determining design heating and cooling loads are specified in Section 144(b) for nonresidential, high-rise residential, and hotel/motel buildings and in Section 150(h) for low-rise residential buildings.

DESIGN HEAT GAIN RATE is the total calculated heat gain through the building envelope under design conditions.

DESIGN HEAT LOSS RATE is the total calculated heat loss through the building envelope under design conditions.

DIRECTLY CONDITIONED SPACE is an enclosed space that is provided with wood heating, is provided with mechanical heating that has a capacity exceeding 10 Btu/hr·ft^2, or is provided with mechanical cooling that has a capacity exceeding 5 Btu/hr-ft^2, unless the space conditioning system is designed and thermostatically controlled to maintain a process environment temperature less than 55°F or to maintain a process environment temperature greater than 90°F for the whole space that the system serves, or unless the space conditioning system is designed and controlled to be incapable of operating at temperatures above 55°F or incapable of operating at temperatures below 90°F at design conditions.

DISPLAY LIGHTING is lighting confined to the area of a display that provides a higher level of illuminance than the level of surrounding ambient illuminance.

DISPLAY PERIMETER is the length of an exterior wall in a B, F-1, or M occupancy that immediately abuts a public sidewalk, measured at the sidewalk level for each story that abuts a public sidewalk.

DISPLAY, PUBLIC AREA are areas for the display of artwork, theme displays, and architectural surfaces in dining and other areas of public access, excluding restrooms and separate banquet rooms.

DISPLAY, SALES FEATURE is an item or items that requires special highlighting to visually attract attention and that is visually set apart from the surrounding area.

DISPLAY, SALES FEATURE FLOOR is a feature display in a retail store, wholesale store, or showroom that requires display lighting.

DISPLAY, SALES FEATURE WALL are the wall display areas, in a retail or wholesale space, that are in the vertical plane of permanent walls or partitions, and that are open shelving feature displays or faces of internally illuminated transparent feature display cases within the Gross Sales Wall Area.

DUAL-GLAZED GREENHOUSE WINDOWS are a type of dual-glazed fenestration product which adds conditioned volume but not conditioned floor area to a building.

DUCT SEALING is a procedure for installing a space conditioning distribution system that minimizes leakage of conditioned air. Minimum specifications for installation procedures, materials, diagnostic testing and field verification are contained in the Residential and Nonresidential ACM Approval Manuals.

EAST-FACING is oriented to within 45 degrees of true east, including 45°00'00" south of east (SE), but excluding 45°00'00" north of east (NE).

ECONOMIZER, AIR is a ducting arrangement and automatic control system that allows a cooling supply fan system to supply outside air to reduce or eliminate the need for mechanical cooling.

ECONOMIZER, WATER is a system by which the supply air of a cooling system is cooled directly or indirectly by evaporation of water, or other appropriate fluid, in order to reduce or eliminate the need for mechanical cooling.

EFFECTIVE APERTURE (EA) is (1) for windows, the visible light transmittance (VLT) times the window wall ratio; and (2) for skylights, the well index times the VLT times the skylight area times 0.85 divided by the gross exterior roof area.

EFFICACY is the ratio of light from a lamp to the electrical power consumed (including ballast losses), expressed in lumens per watt.

ENCLOSED SPACE is space that is substantially surrounded by solid surfaces.

ENERGY BUDGET is the maximum amount of source energy that a proposed building, or portion of a building, can be designed to consume, calculated with the approved procedures specified in Title 24, Part 6.

ENERGY EFFICIENCY RATIO (EER) is the ratio of net cooling capacity (in Btu/hr) to total rate of electrical energy (in watts), of a cooling system under designated operating conditions, as determined using the applicable test method in the Appliance Efficiency Regulations or Section 112.

ENERGY FACTOR (EF) is the ratio of energy output to energy consumption of a water heater, expressed in equivalent units, under designated operating conditions over a 24-hour use cycle, as determined using the applicable test method in the Appliance Efficiency Regulations.

ENERGY OBTAINED FROM DEPLETABLE SOURCES is electricity purchased from a public utility, or any energy obtained from coal, oil, natural gas, or liquefied petroleum gases.

ENERGY OBTAINED FROM NONDEPLETABLE SOURCES is energy that is not energy obtained from depletable sources.

ENFORCING AGENCY is the city, county, or state agency responsible for issuing a building permit.

ENTIRE BUILDING is the ensemble of all enclosed space in a building, including the space for which a permit is sought, plus all existing conditioned and unconditioned space within the structure.

ENVELOPE means BUILDING ENVELOPE.

EXFILTRATION is uncontrolled outward air leakage from inside a building, including leakage through cracks and interstices, around windows and doors, and through any other exterior partition or duct penetration.

EXTERIOR DOOR is a door through an exterior partition that is opaque or has a glazed area that is less than or equal to one-half of the door area. Doors with a glazed area of more than one-half of the door area are treated as a fenestration product.

EXTERIOR FLOOR/SOFFIT is a horizontal exterior partition, or a horizontal demising partition, under conditioned space. For low-rise residential occupancies, exterior floors also include those on grade.

EXTERIOR PARTITION is an opaque, translucent, or transparent solid barrier that separates conditioned space from ambient air or space that is not enclosed. For low-rise residential occupancies, exterior partitions also include barriers that separate conditioned space from unconditioned space, or the ground.

EXTERIOR ROOF/CEILING is an exterior partition, or a demising partition, that has a slope less than 60 degrees from horizontal, that has conditioned space below, and that is not an exterior door or skylight.

EXTERIOR ROOF/CEILING AREA is the area of the exterior surface of exterior roof/ceilings.

EXTERIOR WALL is any wall or element of a wall, or any member or group of memebers, which defines the exterior boundries or courts of a building and which has a slope of 60 degrees or greater with the horizontal plane. An exterior wall or partition is not an exterior floor/soffit, exterior door, exterior roof/ceiling, window, or skylight, or demising wall.

EXTERIOR WALL AREA is the area of the opaque exterior surface of exterior walls.

FENESTRATION PRODUCT is any transparent or translucent material plus any sash, frame, mullions, and dividers, in the envelope of a building, including, but not limited to: windows, sliding glass doors,

french doors, skylights, curtain walls, garden windows, and other doors with a glazed area of more than one-half of the door area.

FENESTRATION SYSTEM means a collection of fenestration products included in the design of a building. (See "fenestration product")

FIELD-FABRICATED FENESTRATION PRODUCT OR EXTERIOR DOOR is a fenestration product or exterior door whose frame is made at the construction site of standard dimensional lumber or other materials that were not previously cut, or otherwise formed with the specific intention of being used to fabricate a fenestration product or exterior door. Field fabricated does not include site assembled frame components that were manufactured elsewhere with the intention of being assembled on site (such as knocked down products, sunspace kits and curtainwalls).

FIREPLACE is a hearth and firechamber or similar prepared place in which a solid fuel fire may be burned, as defined in UBC Section 3102.2 and as further clarified in UBC Section 3102.7; these include but are not limited to factory-built fireplaces, masonry fireplaces, and masonry heaters.

FLOOR/SOFFIT TYPE is a floor/soffit assembly having a specific heat capacity, framing type, and ~~U-value~~U-factor.

FRAMED PARTITION or **ASSEMBLY** is a partition or assembly constructed using separate structural members spaced not more than 32 inches on center.

FRAMING PERCENTAGE is the fraction of the surface of a partition that is framed expressed in percentage.

GAS HEATING SYSTEM is a natural gas or liqueified petroleum gas heating system.

GAS LOG is a self-contained, free-standing, open-flame, gas-burning appliance consisting of a metal frame or base supporting simulated logs, and designed for installation only in a vented fireplace.

GENERAL LIGHTING is lighting designed to provide a substantially uniform level of illumination throughout an area, exclusive of any provision for special visual tasks or decorative effect. When designed for lower-than-task illuminance used in conjunction with other specific task lighting systems, it is also called "ambient" lighting.

GLAZING (See FENESTRATION PRODUCT).

GOVERNMENTAL AGENCY is any public agency or subdivision thereof, including, but not limited to, any agency of the state, a county, a city, a district, an association of governments, or a joint power agency.

GROSS EXTERIOR ROOF AREA is the sum of the skylight area and the exterior roof/ceiling area.

GROSS EXTERIOR WALL AREA is the sum of the window area, door area, and exterior wall area.

GROSS SALES FLOOR AREA is the total area (in square feet) of retail store floor space that is (1) used for the display and sale of merchandise; or (2) associated with that function, including, but not limited to, sales transactions areas, fitting rooms, and circulation areas and entry areas within the space used for display and sale.

GROSS SALES WALL AREA is the area (in square feet) of the inside of exterior walls and permanent full height interior partitions within the gross sales floor area of a retail store that is used for the presentation of merchandise for sale, less the area of openings, doors, windows, baseboards, wainscots, mechanical or structural elements, and other obstructions preventing the use of the area for the presentation of merchandise.

HABITABLE STORY is a story that contains space in which humans may work or live in reasonable comfort, and that has at least 50 percent of its volume above grade.

HEAT CAPACITY (HC) of an assembly is the amount of heat necessary to raise the temperature of all the components of a unit area in the assembly one degree F. It is calculated as the sum of the average thickness times the density times the specific heat for each component, and is expressed in Btu per square foot per degree F.

HEAT PUMP is a device that is capable of heating by refrigeration, and that may include a capability for cooling.

HEATING EQUIPMENT is equipment used to provide mechanical heating for a room or rooms in a building.

HEATING SEASONAL PERFORMANCE FACTOR (HSPF) is the total heating output of a heat pump (in British thermal units) during its normal use period for heating divided by the total electrical energy input (in watt-hours) during the same period, as determined using the applicable test method in the Appliance Efficiency Regulations.

HI is the Hydronics Institute.

HIGH BAY is a space with luminaires 25 feet or more above the floor.

HIGH-RISE RESIDENTIAL BUILDING is a building, other than a hotel/motel, of occupancy group R-1 with four or more habitable stories.

HORIZONTAL GLAZING (See SKYLIGHT).

HOTEL/MOTEL is a building or buildings incorporating six or more guest rooms or a lobby serving six or more guest rooms, where the guest rooms are intended or designed to be used, or which are used, rented, or hired out to be occupied, or which are occupied for sleeping purposes by guests, and all conditioned spaces within the same building envelope. Hotel/motel also includes all conditioned spaces which are (1) on the same property as the hotel/motel, (2) served by the same central HVAC system as the hotel/motel, and (3) integrally related to the functioning of the hotel/motel as such, including, but not limited to, exhibition facilities, meeting and conference facilities, food service facilities, lobbies, and laundries.

HVAC SYSTEM (see SPACE CONDITIONING SYSTEM).

ILLUMINATED FACE is a side of an exit sign that has the word “EXIT” on it.

INDIRECTLY CONDITIONED SPACE is enclosed space including, but not limited to, unconditioned volume in atria, that (1) is not directly conditioned space; and (2) either (a) has an area-weighted heat transfer coefficient to directly conditioned space exceeding that to the outdoors or to unconditioned space, or (b) is a space through which air from directly conditioned spaces is transferred at a rate exceeding 3 air changes per hour.

INFILTRATION is uncontrolled inward air leakage from outside a building, or unconditioned space, including leakage through cracks and interstices, around windows and doors, and through any other exterior or demising partition or pipe or duct penetration.

INTEGRATED PART LOAD VALUE (IPLV) is a single number figure of merit based on part load EER or COP expressing part load efficiency for air-conditioning and heat pump equipment on the basis of weighted operation at various load capacities for the equipment as determined using the applicable test method in the Appliance Efficiency Regulations or Section 112.

ISOLATION DEVICE is a device that prevents the conditioning of a zone or group of zones in a building while other zones of the building are being conditioned.

LOW BAY is a space with luminaires less than 25 feet above the floor.

LOW-RISE RESIDENTIAL BUILDING is a building, other than a hotel/motel, that is of occupancy group R-1 and is three stories or less, or that is of occupancy group R-3.

LPG is Liqueified Petroleum Gas.

LUMEN MAINTENANCE DEVICE is a device capable of automatically adjusting the light output of a lighting system throughout a continuous range to provide a preset level of illumination.

LUMINAIRE is a complete lighting unit consisting of a lamp and the parts designed to distribute the light, to position and protect the lamp, and to connect the lamp to the power supply; commonly referred to as "lighting fixtures" or "instruments."
MANUAL is capable of being operated by personal intervention.

MANUFACTURED DEVICE is any heating, cooling, ventilation, lighting, water heating, refrigeration, cooking, plumbing fitting, insulation, door, fenestration product, or any other appliance, device, equipment, or system subject to Sections 110 through 119 of Title 24, Part 6.

MANUFACTURED FENESTRATION PRODUCT is a fenestration product typically assembled before delivery to a job site. "Knocked down" or partially assembled products sold as a fenestration product must be considered a manufactured fenestration product and meet the rating and labeling requirements for manufactured fenestration products.

MECHANICAL COOLING is lowering the temperature within a space using refrigerant compressors or absorbers, desiccant dehumidifiers, or other systems that require energy from depletable sources to directly condition the space. In nonresidential, high-rise residential, and hotel/motel buildings cooling of a space by direct or indirect evaporation of water alone is not considered mechanical cooling.

MECHANICAL HEATING is raising the temperature within a space using electric resistance heaters, fossil fuel burners, heat pumps, or other systems that require energy from depletable sources to directly condition the space.

MODELING ASSUMPTIONS are the conditions (such as weather conditions, thermostat settings and schedules, internal gain schedules, etc.) that are used for calculating a building's annual energy consumption and that are in the Alternative Calculation Methods Manuals.

MOVABLE SHADING DEVICE (See OPERABLE SHADING DEVICE).

MULTI-SCENE DIMMING SYSTEM is a lighting control device that has the capability of setting light levels throughout a continuous range, and that has pre-established settings within the range.

NEWLY CONDITIONED SPACE is any space being converted from unconditioned to directly conditioned or indirectly conditioned space. Newly conditioned space must comply with the requirements for an addition. See Section 149 for nonresidential occupancies and Section 152 for residential occupancies.

NONRESIDENTIAL BUILDING is any building which is of occupancy group A, B, E, or H.

> NOTE: Requirements for high-rise residential buildings and hotels/motels are included in the nonresidential sections of Title 24, Part 6.

NONRESIDENTIAL MANUAL is the manual developed by the Commission, under Section 25402.1(e) of the Public Resources Code, to aid designers, builders and contractors in meeting the energy efficiency requirements for nonresidential, high-rise residential, and hotel/motel buildings.

NORTH-FACING is oriented to within 45 degrees of true north, including 45°00'00" east of north (NE), but excluding 45°00'00' west of north (NW).

OCCUPANCY SENSOR, LIGHTING is a device that automatically turns lights off soon after an area is vacated.

OCCUPANCY TYPE is one of the following:

AUDITORIUM: The part of a public building where an audience sits in fixed seating, or a room, area, or building with fixed seats used for public meetings or gatherings not specifically for the viewing of dramatic performances.

AUTO REPAIR: The portion of a building used to repair automotive equipment and/or vehicles, exchange parts, and may include work using an open flame or welding equipment.
BANK/FINANCIAL INSTITUTION: An area in a public establishment for conducting financial transactions including the custody, loan, exchange, or issue of money, for the extension of credit, and for facilitating the transmission of funds.

CLASSROOM, LECTURE, OR TRAINING: A room or area where an audience or class receives instruction.

COMMERCIAL AND INDUSTRIAL STORAGE: A room, area, or building used for storing items.

CONVENTION, CONFERENCE, MULTIPURPOSE AND MEETING CENTERS: An assembly room, area, or building that is used for meetings, conventions and multiple purposes including, but not limited to, dramatic performances, and that has neither fixed seating nor fixed staging.

CORRIDOR: A passageway or route into which compartments or rooms open.

DINING: A room or rooms in a restaurant or hotel/motel (other than guest rooms) where meals that are served to the customers will be consumed.

ELECTRICAL/MECHANICAL ROOM: A room in which the building's electrical switchbox or control panels, and/or HVAC controls or equipment is located.

EXERCISE CENTER/GYMNASIUM: A room or building equipped for gymnastics, exercise equipment, or indoor athletic activities.

EXHIBIT: A room or area that is used for exhibitions that has neither fixed seating nor fixed staging.

GENERAL COMMERCIAL AND INDUSTRIAL WORK: A room, area, or building in which an art, craft, assembly or manufacturing operation is performed.

HIGH BAY: Luminaires 25 feet or more above the floor.

LOW BAY: Luminaires less than 25 feet above the floor.

GROCERY STORE: A room, area, or building that has as its primary purpose the sale of foodstuffs requiring additional preparation prior to consumption.

HOTEL FUNCTION AREA: A hotel room or area such as a hotel ballroom, meeting room, exhibit hall, or conference room, together with prefunction areas and other spaces ancillary to its function.

HOTEL LOBBY: The contiguous spaces in a hotel/motel between the main entrance and the front desk, including waiting and seating areas, and other spaces encompassing the activities normal to a hotel lobby function.

KITCHEN/FOOD PREPARATION: A room or area with cooking facilities and/or an area where food is prepared.

LAUNDRY: A place where laundering activities occur.

LIBRARY: A repository for literary materials, such as books, periodicals, newspapers, pamphlets and prints, kept for reading or reference.

LOCKER/DRESSING ROOM: A room or area for changing clothing, sometimes equipped with lockers.

LOUNGE/RECREATION: A room used for leisure activities which may be associated with a restaurant or bar.

MAIN ENTRY LOBBY/RECEPTION/WAITING: The lobby of a building that is directly located by the main entrance of the building and includes the reception area, sitting areas, and public areas.

MALLS, ARCADES AND ATRIA: A public passageway or concourse that provides access to rows of stores or shops.

MEDICAL AND CLINICAL CARE: A room, area, or building that does not provide overnight patient care and that is used to promote the condition of being sound in body or mind through medical, dental, or psychological examination and treatment, including, but not limited to, laboratories and treatment facilities.

MUSEUM: A space in which works of artistic, historical, or scientific value are cared for and exhibited.

OFFICE: A room, area, or building of UBC group B occupancy other than restaurants.

PRECISION COMMERCIAL OR INDUSTRIAL WORK: A room, area, or building in which an art, craft, assembly or manufacturing operation is performed involving visual tasks of small size or fine detail such as electronic assembly, fine woodworking, metal lathe operation, fine hand painting and finishing, egg processing operations, or tasks of similar visual difficulty.

RECEPTION/WAITING AREA: An area where customers or clients are greeted prior to conducting business.

RELIGIOUS WORSHIP: A room, area, or building for worship.

RESTAURANT: A room, area, or building that is a food establishment as defined in Section 27520 of the Health and Safety Code.

RESTROOM: A room or suite of rooms providing personal facilities such as toilets and washbasins.

RETAIL AND SALES: A room, area, or building in which the primary activity is the sale of merchandise.

SCHOOL: A building or group of buildings that is predominately classrooms and that is used by an organization that provides instruction to students.

STAIRS, ACTIVE/INACTIVE: A series of steps providing passage from one level of a building to another

SUPPORT AREAS: A room or area used as a passageway, utility room, storage space, or other type of space associated with or secondary to the function of an occupancy that is listed in these regulations.

THEATER, MOTION PICTURE: An assembly room, hall, or building with tiers of rising seats or steps for the showing of motion pictures.

THEATER, PERFORMANCE: An assembly room, hall, or building with tiers of rising seats or steps for the viewing of dramatic performances, lectures, musical events and similar live performances.

VOCATIONAL ROOM: A room used to provide training in a special skill to be pursued as a trade.
WHOLESALE SHOWROOM: A room where samples of merchandise are displayed.

OPERABLE SHADING DEVICE is a device at the interior or exterior of a building or integral with a fenestration product, which is capable of being operated, either manually or automatically, to adjust the amount of solar radiation admitted to the interior of the building.

OPTIMAL OVERHANG is an overhang that completely shades the glazing at solar noon on August 21 and substantially exposes the glass at solar noon on December 21.

ORNAMENTAL CHANDELIERS are ceiling-mounted, close-to-ceiling, or suspended decorative luminaires that use glass, crystal, ornamental metals, or other decorative material and that typically are used in hotel/motels, restaurants, or churches as a significant element in the interior architecture.

OUTDOOR AIR (Outside air) is air taken from outdoors and not previously circulated in the building.

OVERALL HEAT GAIN is the value obtained in Section 143(b)2 for determining compliance with the component envelope approach.

OVERALL HEAT LOSS is the value obtained in Section 143(b)1 for determining compliance with the component envelope approach.

PLENUM is an air compartment or chamber, including uninhabited crawl space, areas above a ceiling or below a floor, including air spaces below raised floors of computer/data processing centers, or attic spaces, to which one or more ducts are connected and which forms part of either the supply-air, return-air or exhaust air system, other than the occupied space being conditioned.

POOR QUALITY LIGHTING TASKS are visual tasks that require illuminance category "E" or greater, because of the choice of a writing or printing method that produces characters that are of small size or lower contrast than good quality alternatives that are regularly used in offices.

PRIVATE OFFICE or **WORK AREA** is an office bounded by 30-inch or higher partitions and is no more than 200 square feet.

PROCESS is an activity or treatment that is not related to the space conditioning, lighting, service water heating, or ventilating of a building as it relates to human occupancy.

PROCESS LOAD is a load resulting from a process.

PUBLIC AREAS are spaces generally open to the public at large, customers, congregation members, or similar spaces, where occupants need to be prevented from controlling lights for safety, security, or business reasons.

PUBLIC FACILITY RESTROOM is a restroom designed for use by the public.

RAISED FLOOR is a floor (partition) over a crawl space, or an unconditioned space, or ambient air.

RADIANT BARRIER is any reflective material that has an emittance of 0.05 or less, tested in accordance with ASTM C-1371-98, and that is certified to the California Department of Consumer Affairs.

READILY ACCESSIBLE is capable of being reached quickly for operation, repair, or inspection, without requiring climbing or removing obstacles, or resorting to access equipment.

RECOOL is the cooling of air that has been previously heated by space conditioning equipment or systems serving the same building.

RECOVERED ENERGY is energy used in a building that (1) is mechanically recovered from space conditioning, service water heating, lighting, or process equipment after the energy has performed its

original function; (2) provides space conditioning, service water heating, or lighting; and (3) would otherwise be wasted.

REDUCED FLICKER OPERATION is the operation of a light, in which the light has a visual flicker less than 30% for frequency and modulation.
REFERENCE COMPUTER PROGRAM is the DOE 2.1E program, version 86. Note that the ***reference computer program*** is only part of the ***reference method*** which is the official set of procedures and additional calculational algorithms, that uses the the official rules and assumptions along with the ***reference computer program*** to manipulate required inputs to:

1) describe the salient, energy-consuming features of a proposed building design; and to

2) create and describe relevant energy-consuming aspects of a standard building design that meets the prescriptive building energy efficiency standards; and to

3) simulate both proposed and standard building designs and determine if the energy consumption of the proposed building is less than the standard building; and to

4) print a specific set of required compliance forms if and only if the calculated energy budget for the standard building design is greater than the proposed building design.

In the absence of other information to the contrary, the ***reference method*** is described in the most detail in the ***reference method*** input files in the Supplement to this manual.

REHEAT is the heating of air that has been previously cooled by cooling equipment or systems or an economizer.

RELATIVE SOLAR HEAT GAIN is the ratio of solar heat gain through a fenestration product (corrected for external shading) to the incident solar radiation. ~~s~~Solar heat gain includes directly transmitted solar heat and absorbed solar radiation, which is then reradiated, conducted, or convected into the space.

REPAIR is the reconstruction or renewal of any part of an existing building for the purpose of its maintenance. Note: Repairs to low-rise residential buildings are not within the scope of these standards.

RESIDENTIAL BUILDING (See HIGH-RISE RESIDENTIAL BUILDING and LOW-RISE RESIDENTIAL BUILDING).

RESIDENTIAL MANUAL is the manual developed by the Commission, under Section 25402.1(c) of the Public Resources Code, to aid designers, builders, and contractors in meeting energy efficiency standards for low-rise residential buildings.

ROOF is the exterior surface on the top of a building, which has a slope less than 60 degrees from horizontal.

ROOF/CEILING TYPE is a roof/ceiling assembly having a specific framing type and U-factor~~U-value~~.

ROOM CAVITY RATIO (RCR) is:

(a) for rectangular rooms $$\frac{5 \times H \times (L + W)}{L \times W}$$

or

(b) for irregular shaped rooms $$\frac{2.5 \times H \times P}{A}$$

Where:

L = Length of room
W = Width of room
H = Vertical distance from the work plane to the center line of the lighting fixture
P = Perimeter of room
A = Area of room

RUNOUT is piping that is no more than 12 feet long and that is connected to a fixture or an individual terminal unit.

SCONCE is a wall mounted decorative light fixture.

SEASONAL ENERGY EFFICIENCY RATIO (SEER) means the total cooling output of a central air conditioner in British thermal units during its normal usage period for cooling divided by the total electrical energy input in watt-hours during the same period, as determined using the applicable test method in the Appliance Efficiency Regulations.

SEMI-CONDITIONED SPACE is an enclosed nonresidential space that is provided with wood heating, cooling by direct or indirect evaporation of water, mechanical heating that has a capacity of 10 Btu/(hr-ft^2) or less, mechanical cooling that has a capacity of 5 Btu/(hr-ft^2) or less, or is maintained for a process environment as set forth in the definition of DIRECTLY CONDITIONED SPACE.

SERVICE WATER HEATING is heating of water for sanitary purposes for human occupancy, other than for comfort heating.

SHADING is the protection from heat gains because of direct solar radiation by permanently attached exterior devices or building elements, interior shading devices, glazing material, or adherent materials. Permanently attached means (a) attached with fasteners that require additional tools to remove (as opposed to clips, hooks, latches, snaps, or ties); or (b) required by the UBC for emergency egress to be removable from the interior without the use of tools.

SHADING COEFFICIENT (SC) is the ratio of the solar heat gain through a fenestration product to the solar heat gain through an unshaded 1/8 inch thick clear double strength glass under the same set of conditions. For nonresidential, high-rise residential, and hotel/motel buildings, this shall exclude the effects of mullions, frames, sashes, and interior and exterior shading devices.

SITE-ASSEMBLED FENESTRATION includes both field-fabricated fenestration and site-built fenestration.

SITE-BUILT FENESTRATION PRODUCTS are fenestration products designed to be field-glazed or field assembled units comprised of specified framing and glazing components. Site-built fenestration is eligible for certification under NFRC 100-SB, and may include both vertical glazing and horizontal glazing.

SITE SOLAR ENERGY is natural daylighting, or thermal, chemical, or electrical energy derived from direct conversion of incident solar radiation at the building site.

SKYLIGHT is glazing having a slope less than 60 degrees from the horizontal with conditioned space below~~, except for purposes of complying with Section 151(f), where a skylight is glazing having a slope not exceeding 4.76 degrees (1:12) from the horizontal~~.

SKYLIGHT AREA is the area of the surface of a skylight, plus the area of the frame, sash, and mullions.

SKYLIGHT TYPE is a type of skylight assembly having a specific solar heat gain coefficient~~, whether translucent or transparent,~~ and ~~U-value~~ U-factor, whether glass mounted on a curb,

glass not mounted on a curb or plastic (assumed to be mounted on a curb).

SMACNA is the Sheet Metal and Air-conditioning Contractors National Association.

SOLAR HEAT GAIN COEFFICIENT (SHGC) is the ratio of the solar heat gain entering the space through the fenestration area to the incident solar radiation. Solar heat gain includes directly transmitted solar heat and absorbed solar radiation, which is then reradiated, conducted, or convected into the space.

SOURCE ENERGY is the energy that is used at a site and consumed in producing and in delivering energy to a site, including, but not limited to, power generation, transmission, and distribution losses, and that is used to perform a specific function, such as space conditioning, lighting or water heating. Table 1-B contains the conversion factors for converting site to source energy.

SOUTH-FACING is oriented to within 45 degrees of true south including 45°00'00" west of south (SW), but excluding 45°00'00" east of south (SE).

SPA is a vessel that contains heated water, in which humans can immerse themselves, is not a pool, and is not a bathtub.

SPACE CONDITIONING SYSTEM is a system that provides either collectively or individually heating, ventilating, or cooling within or associated with conditioned spaces in a building.

SPECIFIC HEAT is the quantity of heat that must be supplied to a unit mass of the material to increase its temperature by one degree as documented in an ASHRAE handbook, a comparably reliable reference or manufacturer's literature.

SYSTEM is a combination of equipment, controls, accessories, interconnecting means, or terminal elements, by which energy is transformed to perform a specific function, such as space conditioning, service water heating, or lighting.

TASK-ORIENTED LIGHTING is lighting that is designed specifically to illuminate a task location, and that is generally confined to the task location.

THERMAL CONDUCTIVITY is the quantity of heat that will flow through a unit area of the material per hour when the temperature difference through the material is one degree as documented in an ASHRAE handbook, a comparably reliable reference or manufacturer's literature.

THERMAL MASS is solid or liquid material used to store heat for later heating use or for reducing cooling requirements.

THERMAL RESISTANCE (R) is the resistance of a material or building component to the passage of heat in hr-ft^2 -°F/Btu.

THERMOSTATIC EXPANSION VALVE (TXV) is a refrigerant metering valve, installed in an air conditioner or heat pump, which controls the flow of liquid refrigerant entering the evaporator in response to the superheat of the gas leaving it.

THROW DISTANCE is the distance between the luminaire and the center of the plane lit by the luminaire on a display.

TUNING is a lighting control device that allows authorized personnel only to select a single light level within a continuous range.

UBC is the 1994 edition of the state-adopted Uniform Building Code, Title 24.

UL is the Underwriters Laboratory.

UMC is the 1997 edition of the state-adoted Uniform Mechanical Code.

UNCONDITIONED SPACE is enclosed space within a building that is not directly conditioned, indirectly conditioned, or semi-conditioned space.

UNIT INTERIOR MASS CAPACITY (UIMC) is the amount of effective heat capacity per unit of thermal mass, taking into account the type of mass material, thickness, specific heat, density and surface area.

~~**U-VALUE**~~ **U-FACTOR** is the overall coefficient of thermal transmittance of a construction assembly, in Btu/h-ft^2 -^{o}F, including air film resistance at both surfaces.

VAPOR BARRIER is a material that has a permeance of one perm or less and that provides resistance to the transmission of water vapor.

VARIABLE AIR VOLUME (VAV) SYSTEM is a space conditioning system that maintains comfort levels by varying the volume of conditioned air to the zones served.

VERTICAL GLAZING (See "window")

VERY VALUABLE MERCHANDISE is rare or precious objects, including, but not limited to, jewelry, coins, small art objects, crystal, china, ceramics, or silver, the selling of which involves customer inspection of very fine detail from outside of a locked case.

VISIBLE LIGHT TRANSMITTANCE (VLT) is the ratio (expressed as a decimal) of visible light that is transmitted through a glazing material to the light that strikes the material.

WALL TYPE is a wall assembly having a specific heat capacity, framing type, and ~~U value~~U-factor.

WELL INDEX is the ratio of the amount of visible light leaving a skylight well to the amount of visible light entering the skylight well and is calculated as follows:

(a) for rectangular wells:

$$\left(\frac{Well\ \ height\ \ (well\ \ length\ + well\ \ width\ )}{2\,x well\ \ length\ \ x well\ \ width} \right)$$

or

(b) for irregular shaped wells:

$$\left(\frac{Well height x well\, perimeter}{4 x well area} \right)$$

Where the length, width, perimeter, and area are measured at the bottom of the well, and R is the weighted average reflectance of the walls of the well.

WEST-FACING is oriented to within 45 degrees of true west, including 45^{0}00'00" north of due west (NW), but excluding 45^{0}00'00" south of west (SW).

WINDOW is glazing that is not a skylight.

WINDOW AREA is the area of the surface of a window, plus the area of the frame, sash, and mullions.

WINDOW TYPE is a window assembly having a specific solar heat gain coefficient, relative solar heat gain, and ~~U-value~~U-factor.

WINNDOW WALL RATIO is the ratio of the window area to the gross exterior wall area.

WOOD HEATER is an enclosed wood burning appliance used for space heating and/or domestic water heating, and which meets the definition in Federal Register, Volume 52, Number 32, February 18, 1987.

WOOD STOVE (See WOOD HEATER).

ZONE, LIGHTING is a space or group of spaces within a building that has sufficiently similar requiremnts so that lighting can be automatically controlled in unison throughout the zone by an illumination controlling device or devices, and does not exceed one floor.

ZONE, SPACE CONDITIONING is a space or group of spaces within a building with sufficiently similar comfort conditioning requirements so that comfort conditions, as specified in 144(b)3 or 150(h), as applicable, can be maintained throughout the zone by a single controlling device.

Appendix E:

Approved Forms

Appendix E: Approved Forms

PERFORMANCE CERTIFICATE OF COMPLIANCE (Part 1 of 3) PERF-1

PROJECT NAME		DATE
PROJECT ADDRESS		Building Permit #
PRINCIPAL DESIGNER-ENVELOPE	TELEPHONE	
DOCUMENTATION AUTHOR	TELEPHONE	Checked by/Date Enforcement Agency Use

GENERAL INFORMATION

DATE OF PLANS	BUILDING CONDITIONED FLOOR AREA	CLIMATE ZONE

BUILDING TYPE	☐ NONRESIDENTIAL	☐ HIGH RISE RESIDENTIAL		☐ HOTEL/MOTEL GUEST
PHASE OF CONSTRUCTION	☐ NEW CONSTRUCTION	☐ ADDITION	☐ ALTERATION	☐ EXISTING + ADDITION

STATEMENT OF COMPLIANCE

This Certificate of Compliance lists the building features and performance specifications needed to comply with Title 24, Parts 1 and 6 of the State Building Code. This certificate applies only to a building using the performance compliance approach.

DOCUMENTATION AUTHOR	SIGNATURE	DATE

The Principal Designers hereby certify that the proposed building design represented in the construction documents and modeled for this permit application are consistent with all other forms and worksheets, specifications, and other calculations submitted with this permit application. The proposed building as designed meets the energy efficiency requirements of the State Building Code, Title 24, Part 6.

ENV. LTG. MECH.

☐ ☐ ☐ 1. I hereby affirm that I am eligible under the provisions of Division 3 of the Business and Professions Code to sign this document as the person responsible for its preparation; and that I am licensed in the State of California as a civil engineer, mechanical engineer (envelope & mechanical only), or electrical engineer (lighting only) or I am a licensed architect.

☐ ☐ ☐ 2. I affirm that I am eligible under the provisions of Division 3 of the Business and Professions Code Section 5537.2 or 6737.3 to sign this document as the person responsible for its preparation; and that I am a licensed contractor performing this work.

☐ ☐ ☐ 3. I affirm that I am eligible under Division 3 of the Business and Professions Code to sign this document because it pertains to a structure or type of work described as exempt pursuant to Business and Professions Code Sections 5537, 5538 and 6737.1. (These sections of the Business and Professions Code are printed in full in the Nonresidential Manual.)

ENVELOPE COMPLIANCE

Indicate location on plans of Note Block for Mandatory Measures:

Required Forms:		TELEPHONE	
LICENSED ENGINEER/ARCHITECT/CONTRACTOR – NAME	SIGNATURE	LIC. NO.	DATE

LIGHTING COMPLIANCE

Indicate location on plans of Note Block for Mandatory Measures:

Required Forms:		TELEPHONE	
LICENSED ENGINEER/ARCHITECT/CONTRACTOR – NAME	SIGNATURE	LIC. NO.	DATE

MECHANICAL COMPLIANCE

Indicate location on plans of Note Block for Mandatory Measures:

Required Forms:		TELEPHONE	
LICENSED ENGINEER/ARCHITECT/CONTRACTOR – NAME	SIGNATURE	LIC. NO.	DATE

Run Initiation Time: **Run Code:**

PERFORMANCE CERTIFICATE OF COMPLIANCE (Part 2 of 3) PERF-1

PROJECT NAME	DATE

ANNUAL SOURCE ENERGY USE SUMMARY (kBtu/sqft-yr)

ENERGY COMPONENT	Standard Design	Proposed Design	Compliance Margin
Space Heating			
Space Cooling			
Indoor Fans			
Heat Rejection			
Pumps			
Domestic Hot Water			
Lighting			
Receptacle			
Process			
TOTALS:			

BUILDING COMPLIES

GENERAL INFORMATION

Building Orientation		Conditioned Floor Area	
Number of Stories		Unconditioned Floor Area	
Number of Systems			
Number of Zones			

	Orientation	Gross Area		Glazing Area		Glazing Ratio
Front Elevation			sqft		sqft	
Left Elevation			sqft		sqft	
Rear Elevation			sqft		sqft	
Right Elevation			sqft		sqft	
Total			sqft		sqft	
Roof			sqft		sqft	

	Standard		Proposed	
Lighting Power Density		W/sqft		W/sqft
Perscriptive Env. Heat Loss				
Perscriptive Env. Heat Gain				

PERFORMANCE CERTIFICATE OF COMPLIANCE (Part 3 of 3) PERF-1

PROJECT NAME	DATE

ZONE INFORMATION

System Name	Zone Name	Occupancy Type	Floor Area (sqft.)	Installed LPD (W/sf)[1]	Control Credits (W/sf)[1]	Tailored		Process Loads (W/sf)[3]
						LPD (W/sf)[2]	Vent. (cfm/sf)[3]	

Notes: 1. See LTG-1 **2.** Provide Tailored Lighting Forms & Lighting Plans for Tailored LPD **3.** Provide Supporting Documentation

EXCEPTIONAL CONDITIONS COMPLIANCE CHECKLIST

The local enforcement agency should pay special attention to this checklist. These items require special written justification and documentation, and special verification to be used with the performance approach. The local enforcement agency determines the adequacy of the justification, and may reject a building or design that otherwise complies based on the adequacy of the special justification and documentation submitted.

	PLAN	FIELD

The exceptional features listed in this performance approach application have specifically been reviewed. Adequate written justification and documentation for their use have been provided by the applicant.

Authorized Signature or Stamp_____

Run Initiation Time: **Run Code:**

ENVELOPE COMPLIANCE SUMMARY Performance ENV-1

PROJECT NAME	DATE

OPAQUE SURFACES

#	Surface Type	Construction Type (e.g., Block, Wood, Metal)	Area	U-factor	Azimuth	Tilt	Solar Gain Y/N	Form 3 Reference	Location / Comments (e.g., Suspended Ceiling, Demising, etc.)

FENESTRATION SURFACES

Site Assembled Glazing

☐ Check box if Building is ≥100,000 ft^2 of CFA and ≥10,000 ft^2 of vertical glazing then NFRC Certification is required. Follow NFRC 100-SB Procedures and submit NFRC Label Certificate Form.

Fenestration Type	Area	U-factor	Azimuth	SHGC	Glazing Type	Location / Comments	NOTES TO FIELD – For Bldg. Dept. Use Only

EXTERIOR SHADING

Fenestration #	Exterior Shade Type	SHGC	Window		Overhang				Left Fin			Right Fin		
			Height	Width	Length	Height	LExt.	RExt.	Dist.	Length	Height	Dist.	Length	Height

CERTIFICATE OF COMPLIANCE SUMMARY Performance (Part 1 of 2) MECH-1

PROJECT NAME	DATE

SYSTEM FEATURES

SYSTEM NAME	MECHANICAL SYSTEMS			NOTE TO FIELD Bldg. Dept. Use
TIME CONTROL				
SETBACK CONTROL				
ISOLATION ZONES				
HEAT PUMP THERMOSTAT?				
ELECTRIC HEAT?				
FAN CONTROL				
VAV MINIMUM POSITION CONTROL?				
SIMULTANEOUS HEAT/COOL?				
HEAT AND COOL SUPPLY RESET?				
HEAT REJECTION CONTROL				
VENTILATION				
OUTDOOR DAMPER CONTROL?				
ECONOMIZER TYPE				
DESIGN O.A. CFM (MECH-3, COLUMN H)				
HEATING EQUIPMENT TYPE				
HIGH EFFICIENCY? IF YES ENTER EFF. #				
MAKE AND MODEL NUMBER				
COOLING EQUIPMENT TYPE				
HIGH EFFICIENCY? IF YES ENTER EFF. #				
MAKE AND MODEL NUMBER				
PIPE INSULATION REQUIRED?				
PIPE/DUCT INSULATION PROTECTED?				
HEATING DUCT LOCATION R-VALUE				
COOLING DUCT LOCATION R-VALUE				
VERIFIED SEALED DUCTS IN CEILING/ROOF SPACE %FAN FLOW				

CODE TABLES: Enter code from table below into columns above.

	Y:Yes	N:No
HEAT PUMP THERMOSTAT?		
ELECTRIC HEAT?		
VAV MINIMUM POSITION CONTROL?		
SIMULTANEOUS HEAT/COOL?		
HEAT AND COOL SUPPLY RESET?		
HIGH EFFICIENCY?		
PIPE INSULATION REQUIRED?		
PIPE/DUCT INSULATION PROTECTED?		
SEALED DUCTS IN CEILING/ROOF SPACE?		

TIME CONTROL	SETBACK CTRL.	ISOLATION ZONES	FAN CONTROL
S: Prog. Switch O: Occupancy Sensor M: Manual Timer	H: Heating C: Cooling B: Both	Enter number of Isolation Zones	: Inlet Vanes P: Variable Pitch V: VFD O: Other C: Curve
VENTILATION	**OUTDOOR DAMPER**	**ECONOMIZER**	**O.A. CFM**
B: Air Balance C: Outside Air Cert. M: Outside Air Measure D: Demand Control N: Natural	A: Auto G: Gravity	A: Air W: Water N: Not Required EC: Economizer Control See Section 144(e)3	Enter Design Outdoor Air CFM. Note: This shall be no less than Column H on MECH-3.

NOTES TO FIELD – For Building Department Use Only

Run Initiation Time: **Run Code:**

MECHANICAL COMPLIANCE SUMMARY Performance (Part 2 of 2) MECH-1

PROJECT NAME	DATE

DUCT INSULATION

SYSTEM NAME	HEATING DUCTS		COOLING DUCTS		DUCT TAPE ALLOWED?	
	LOCATION	R-VAL	LOCATION	R-VAL	Y	N

PIPE INSULATION

PIPE TYPE (Supply, Return, etc.)	INSULATION REQUIRED?	
	Y	N

NOTES TO FIELD - For Building Department Use Only

MECHANICAL EQUIPMENT SUMMARY Performance (Part 1 of 2) MECH-2

PROJECT NAME	DATE

CHILLER AND TOWER SUMMARY

					PUMPS					
Equipment Name	Equipment Type	Qty.	Efficiency	Tons	Total Qty.	GPM	BHP	Motor Eff.	Drive Eff.	Pump Control

DHW / BOILER SUMMARY

								TANK INSUL.
System Name	System Type	Distribution Type	Qty.	Rated Input	Vol. (Gals.)	Energy Factor or Recovery Efficiency	Standby Loss or Pilot	Ext. R-Val

CENTRAL SYSTEM RATINGS

			HEATING			COOLING			
System Name	System Type	Qty.	Output	Aux. kW	Efficiency	Output	Sensible	Efficiency	Economizer type

CENTRAL FAN SUMMARY

			SUPPLY FAN				RETURN FAN			
System Name	Fan Type	Motor Location	CFM	BHP	Motor Eff.	Drive Eff.	CFM	BHP	Motor Eff.	Drive Eff.

Run Initiation Time: **Run Code:**

MECHANICAL EQUIPMENT SUMMARY Performance (Part 2 of 2) MECH-2

PROJECT NAME	DATE

VAV SUMMARY

	VAV					FAN					BASEBOARD	
Zone Name	System Type	Qty.	Min. CFM Ratio	Reheat? Type	Reheat? ΔT	Flow Ratio	CFM	BHP	Motor Eff.	Drive Eff.	Type	Output

EXHAUST FAN SUMMARY

EXHAUST FAN						EXHAUST FAN					
Room Name	Qty.	CFM	BHP	Motor Eff.	Drive Eff.	Room Name	Qty.	CFM	BHP	Motor Eff.	Drive Eff.

MECHANICAL COMPLIANCE SUMMARY Performance MECH-3

PROJECT NAME	DATE

MECHANICAL VENTILATION

A	B	C	D	E	F	G	H	I	J	K
	AREA BASIS			OCCUPANCY BASIS			REQ'D. O.A. (MAX. OF D OR G)	DESIGN OUTDOOR AIR CFM	VAV MIN. CFM	TRANFER AIR CFM
ZONE/SYSTEM	COND AREA (SF)	CFM PER SF	MIN. CFM (B X C)	NO. OF PEOPLE	CFM PER PERSON	MIN. CFM (E X F)				

C	Minimum ventilation rate per Section § 121, Table 1-F.
E	Based on expected number of occupants or at least 50% of Chapter 10 1997 UBC occupant density
I	Must be greater than or equal to H, or use Transfer Air. Design outdoor air includes ventilation from supply air system & exhaust fans which operate at design conditions.
K	Must be greater than or equal to (H - I), and, for VAV, greater than or equal to (H - J).

Run Initiation Time: **Run Code:**

MECHANICAL DISTRIBUTION SUMMARY PERFORMANCE USE ONLY MECH-5

PROJECT NAME	DATE
SITE ADDRESS	PERMIT NUMBER

VERIFIED DUCT TIGHTNESS BY INSTALLER

☐ **DUCT LEAKAGE REDUCTION Pressurization Test Results (Aerosol or Manual Sealing) CFM @ 25 PA**

	Measured Values
Test Leakage (CFM)	

Fan Flow

If Fan Flow is Calculated as 400 cfm/ton x number of tons, or as 21.7 x Heating Capacity in Thousands of Btu/hr, enter calculated value here	
If Fan Flow is Measured, enter measured value here	
Leakage Fraction = Test Leakage / (Calculated or Measured Fan Flow)	
Check Box for Pass or Fail (Pass = 6% or less of Leakage Fraction)	☐ Pass ☐ Fail

Tests Performed	Signature Date	Installing Subcontractor (Co. Name) **OR** General Contractor (Co. Name)

HERS RATER COMPLIANCE STATEMENT

☐ BUILDING TESTED Pressurization Test Results (Aerosol or Manual Sealing) CFM @ 25 PA

As the HERS rater providing diagnostic testing and field verification, I certify that the building identified on this form complies with the diagnostic tested compliance requirements as checked on this form.

Supply Duct R-value _____(R-value 4.2 or greater)
Return Duct R-value _____(R-value 4.2 or greater)

☐ Distribution system is fully ducted (i.e., does not use building cavities as plenums or platform returns in lieu of ducts)

☐ Where cloth backed, rubber adhesive duct tape is installed, mastic and drawbands are used in combination with cloth backed, rubber adhesive duct tape to seal leaks at duct connections.

☐ Minimum Requirements for Duct Leakage Reduction Compliance Credit

	Measured Values
Test Leakage (CFM)	

Fan Flow

If Fan Flow is Calculated as 400 cfm/ton x number of tons, or as 21.7 x Heating Capacity in Thousands of Btu/hr, enter calculated value here	
If Fan Flow is Measured, enter measured value here	
Leakage Fraction = Test Leakage / (Calculated or Measured Fan Flow)	
Check Box for Pass or Fail (Pass = 6% or less of Leakage Fraction)	☐ Pass ☐ Fail

Tests Performed	Signature Date	HERS Rater (Name)

COPY TO: Building Department, HERS Provider (if applicable), and Building Owner at Occupancy

CERTIFICATE OF COMPLIANCE Performance (Part 1 of 2) LTG-1

PROJECT NAME	DATE

INSTALLED LIGHTING SCHEDULE

		LAMPS			BALLAST		LUMINAIRE		TOTAL WATTS
Name	LUMINAIRE DESCRIPTION	Type DESCRIPTION	No. of Lamps	Watts Per Lamp	Type DESCRIPTION	No. of Ballast	No. of Lumin.	Watts/ Lumin.	

Lighting Schedule on Plans Shows
Exterior Lighting Meets

☐ Efficacy and Control Requirement of § 130(c)

☐ Control Requirements of § 131(f)

SUBTOTAL FROM THIS PAGE	
PLUS SUBTOTAL FROM CONTINUATION PAGE	
PORTABLE LIGHTING (From LTG-1 Part 3 of 3)	
LESS CONTROL CREDIT WATTS (From LTG-3)	
ADJUSTED ACTUAL WATTS	

MANDATORY AUTOMATIC CONTROLS

CONTROL LOCATION (Room #)	CONTROL IDENTIFICATION	CONTROL TYPE (Auto Time Switch, Exterior, etc.)	SPACE CONTROLLED	NOTE TO FIELD

CONTROLS FOR CREDIT

CONTROL LOCATION (Room # or Dwg. #)	CONTROL IDENTIFICATION	CONTROL TYPE (Occupant, Daylight, Dimming, etc.)	LUMINAIRES CONTROLLED		NOTE TO FIELD
			TYPE	# OF LUMINAIRES	

NOTES TO FIELD - For Building Department Use Only

Run Initiation Time: **Run Code:**

PORTABLE LIGHTING WORKSHEET Performance (Part 2 of 2) LTG-1

PROJECT NAME	DATE

TABLE 1A - PORTABLE LIGHTING NOT SHOWN ON PLANS FOR OFFICE AREAS > 250 SQUARE FEET

A	B	C	D
ROOM # OR ZONE ID	DEFAULT	AREA (SF)	TOTAL WATTS (B X C)
	0.2		
	0.2		
	0.2		
	0.2		
	0.2		
	0.2		
	TOTAL		

TABLE 1B - PORTABLE LIGHTING SHOWN ON PLANS FOR OFFICE AREAS > 250 SQUARE FEET

A	B	C	D	E	F	G
ROOM # OR ZONE ID	PORTABLE LIGHTING DESCRIPTION(S) PER TASK AREA	LUMINAIRE(S) WATTS PER TASK AREA	TASK AREA (SF)	NUMBER OF TASK AREAS	TOTAL AREA (SF) (D X E)	TOTAL WATTS (C X E)
				TOTAL		

TABLE 1C - PLANS SHOW PORTABLE LIGHTING IS NOT REQUIRED FOR OFFICE AREAS > 250 SQUARE FEET

ROOM # OR ZONE ID	TOTAL AREA (SF)	Designer needs to provide detailed documentation that the lighting level provided by the overhead lighting meets the needs of the space. The details include luminaire types, CU, and mounting locations relative to work areas.
TOTAL		

BUILDING SUMMARY - PORTABLE LIGHTING

BUILDING SUMMARY	TOTAL AREA (SF) (FROM TABLES 1A+1B+1C)	TOTAL WATTS (FROM TABLES 1A+1B)
BUILDING TOTAL		

Enter on LTG-1 and 2: Portable Lighting

Appendix F:

Technical Databases for Test Runs

Appendix F: Technical Databases for Test Runs

ACM MATERIAL LIBRARY					
NAME	**THICKNESS (feet)**	**CONDUCT.**	**DENSITY**	**SP-HEAT**	**R-VALUE**
2X4	0.2917	0.0842	35.00	0.39	
2X6	0.4583	0.0842	35.00	0.39	
AIRWALL-MAT					1.00
CARPET2					2.00
CEL-2.5	0.2083	0.0333	5.00	0.32	
EARTH	1.0000	0.5000	85.00	0.20	
HC1.42U057-MAT	1.0000	0.0601	7.11	0.20	
HC1.42U078-MAT	1.0000	0.0839	7.11	0.20	
HC19R2.375	0.9500	0.4000	100.00	0.20	
HC9.67R1.209	0.4835	0.4000	100.00	0.20	
ISO-3.0	0.2500	0.0142	1.50	0.38	
PERIM	1.3330	0.9300	82.00	0.22	
R1.60					1.60
R1.95					1.95
R10-RIGID-INS	0.1667	0.0167	14.00	0.17	
R11-INS	0.2917	0.0265	0.60	0.20	
R13-INS	0.2917	0.0224	0.60	0.20	
R19-INS	0.5035	0.0265	0.60	0.20	
R30-INS	0.7500	0.0265	0.60	0.20	
R4-RIGID-INS	0.0833	0.0218	14.00	0.17	
R4.76					4.76
R5.93					5.93
R7-RIGID-INS	0.0833	0.0119	14.00	0.17	
RHC6U057-MAT	1.0000	0.0597	30.00	0.20	
RHC6U078-MAT	1.0000	0.0831	30.00	0.20	
SC2A	0.0729	0.4288	166.00	0.20	
SPANDREL-R10-MAT	1.0000	0.0100	25.00	0.20	
SPANDREL-R15-MAT	1.0000	0.0667	30.00	0.20	

ACM MATERIAL LIBRARY					
NAME	THICKNESS (feet)	CONDUCT.	DENSITY	SP-HEAT	R-VALUE
W1A-R11	0.2950	0.0952	5.50	0.13	
W1B-R13	0.2950	0.0894	5.50	0.13	
W1D-R17	0.2950	0.0720	5.50	0.13	
W2A-R11	0.2917	0.0265	5.50	0.13	
W2B-R13	0.2917	0.0224	5.50	0.13	
W2C-R18	0.4583	0.0257	5.50	0.13	
W2D-R21	0.4583	0.0218	5.50	0.13	
W3A-MAT	0.3333	0.2259	168.00	0.20	
W3B-MAT	0.3333	0.1595	168.00	0.20	
W4A-MAT	0.5000	0.8333	162.00	0.20	
W4B-MAT	0.5000	0.7257	162.00	0.20	
W4C-MAT	0.5000	0.3030	162.00	0.20	
W4D-MAT	0.5000	0.2591	162.00	0.20	
WD4C	0.2917	0.0667	32.00	0.33	
WD6C	0.4583	0.0667	32.00	0.33	
WHC2.4U084-MAT	1.0000	0.0905	12.00	0.20	
WHC2.4U092-MAT	1.0000	0.0991	12.00	0.20	
WHC5U084-MAT	1.0000	0.0905	25.00	0.20	
WHC5U092-MAT	1.0000	0.0998	25.00	0.20	

ACM LAYERS LIBRARY

Name	Mat[1]	Mat[2]	Mat[3]	Mat[4]	Mat[5]	I-F-R
AIRWALL-LAY	AIRWALL-MAT					0.68
CONC-SPANDEL-LAY	CC22	W1B-R13	GP02			0.68
DEMISING-LAY	GP01	W1A-R11	GP01			0.68
DOORC-LAY	AS01	WD11	AS01			0.68
FHC19U097-LAY	R4.76	HC19R2.375	CP01			0.92
FHC19U158-LAY	R1.60	HC19R2.375	CP01			0.92
FHC9.67U097-LAY	R5.93	HC9.67R1.209	CP01			0.92
FHC9.67U158-LAY	R1.95	HC9.67R1.209	CP01			0.92
FLR-CONC-CAV-LAY	CEL-2.5	CC03	CP01			0.92
FLR-CONC-RAK-LAY	CEL-2.5	CC05	CP01			0.92
FX02X6-FRM-LAY	2X6	PW04	CARPET2			0.92
FX02X6-INS-LAY	PW04	CARPET2				0.92
FX112X6-FRM-LAY	2X6	PW04	CARPET2			0.92
FX112X6-INS-LAY	W2A-R11	PW04	CARPET2			0.92
FX132X6-FRM-LAY	2X6	PW04	CARPET2			0.92
FX132X6-INS-LAY	W2B-R13	PW04	CARPET2			0.92
INTWALL-LAY	GP03	GP03	GP03			0.68
RF-INTERIOR-LAY	CC04	CP01				0.61
RF-ISO3.0-LAY	BR01	ISO-3.0	PW04			0.61
RF1B-NR-LAY	BR01	PW04	AL23	W2A-R11	GP01	0.61
RF1B-NRF-LAY	BR01	PW04	2X6	GP01		0.61
RF1C-NR-LAY	BR01	PW04	W2C-R18	GP01		0.61
RF1C-NRF-LAY	BR01	PW04	WD6C	GP01		0.61
RF1D-NR-LAY	BR01	R7-RIGID-INS	PW04	W2C-R18	GP01	0.61
RF1D-NRF-LAY	BR01	R7-RIGID-INS	PW04	2X6	GP01	0.61
RHC1.42U057-LAY	HC1.42U057-MAT					0.61
RHC1.42U078-LAY	HC1.42U078-MAT					0.61
RHC6U057-LAY	RHC6U057-MAT					0.61
RHC6U078-LAY	RHC6U078-MAT					0.61
ROOFI-F-LAY	CC32	PW05	WD05	WD05		0.61
ROOFI-LAY	CC32	PW05				0.61
SLAB-LAY	EARTH	CC14				0.92

ACM LAYERS LIBRARY						
Name	**Mat[1]**	**Mat[2]**	**Mat[3]**	**Mat[4]**	**Mat[5]**	**I-F-R**
SLABC-LAY	EARTH	CC14	CP01			0.92
SLABP-LAY	EARTH	CC14	CP01			0.92
SPANDREL-R10-LAY	SPANDREL-R10-MAT					0.68
SPANDREL-R15-LAY	SPANDREL-R15-MAT					0.61
W1A-LAY	SC2A	PW03	W1A-R11	GP02		0.68
W1B-LAY	SC2A	PW03	W1B-R13	GP02		0.68
W1D-LAY	SC2A	IN33	PW03	W1D-R17	GP01	0.68
W2A-FRM-LAY	PW03	BP01	WD04	GP01		0.68
W2A-INS-LAY	PW03	BP01	W2A-R11	GP01		0.68
W2B-FRM-LAY	PW03	BP01	WD04	GP01		0.68
W2B-INS-LAY	PW03	BP01	W2B-R13	GP01		0.68
W2D-FRM-LAY	PW03	BP01	WD6C	GP01		0.68
W2D-INS-LAY	PW03	BP01	W2D-R21	GP01		0.68
W3A-LAY	W3A-MAT					0.68
W3B-LAY	W3B-MAT					0.68
W4A-LAY	W4A-MAT					0.68
W4B-LAY	W4B-MAT					0.68
W4C-LAY	W4C-MAT					0.68
W4D-LAY	W4D-MAT					0.68
WHC2.4U084-LAY	WHC2.4U084-MAT					0.68
WHC2.4U092-LAY	WHC2.4U092-MAT					0.68
WHC5U084-LAY	WHC5U084-MAT					0.68
WHC5U092-LAY	WHC5U092-MAT					0.68
WIZ-LAY	GP02	W1A-R11	GP02			0.68

ACM CONSTRUCTION LIBRARY			
Construction	**Layers**	**ABS**	**RO**
AIRWALL	AIRWALL-LAY	0.7	3
CONC-SPANDEL	CONC-SPANDEL-LAY	0.7	3
DEMISING	DEMISING-LAY	0.7	3
DOORC	DOORC-LAY	0.7	3
FHC19U097	FHC19U097-LAY	0.7	3
FHC19U158	FHC19U158-LAY	0.7	3
FHC9.67U097	FHC9.67U097-LAY	0.7	3
FHC9.67U158	FHC9.67U158-LAY	0.7	3
FLR-CONC-CAV	FLR-CONC-CAV-LAY	0.7	3
FLR-CONC-RAK	FLR-CONC-RAK-LAY	0.7	3
FX02X6-FRM	FX02X6-FRM-LAY	0.7	3
FX02X6-INS	FX02X6-INS-LAY	0.7	3
FX112X6-FRM	FX112X6-FRM-LAY	0.7	3
FX112X6-INS	FX112X6-INS-LAY	0.7	3
FX132X6-FRM	FX132X6-FRM-LAY	0.7	3
FX132X6-INS	FX132X6-INS-LAY	0.7	3
INTWALL	INTWALL-LAY	0.7	3
RF-INTERIOR	RF-INTERIOR-LAY	0.7	3
RF-ISO3.0	RF-ISO3.0-LAY	0.7	3
RF1B-NR	RF1B-NR-LAY	0.7	3
RF1B-NRF	RF1B-NRF-LAY	0.7	3
RF1C-NR	RF1C-NR-LAY	0.7	3
RF1C-NRF	RF1C-NRF-LAY	0.7	3
RF1D-NR	RF1D-NR-LAY	0.7	3
RF1D-NRF	RF1D-NRF-LAY	0.7	3
RHC1.42U057	RHC1.42U057-LAY	0.7	3
RHC1.42U078	RHC1.42U078-LAY	0.7	3
RHC6U057	RHC6U057-LAY	0.4	3
RHC6U078	RHC6U078-LAY	0.4	3
ROOFI	ROOFI-LAY	0.7	3

ACM CONSTRUCTION LIBRARY			
Construction	**Layers**	**ABS**	**RO**
ROOFI-F	ROOFI-F-LAY	0.7	3
SLAB	SLAB-LAY	0.1	3
SLABC	SLABC-LAY	0.1	3
SLABP	SLABP-LAY	0.1	3
SPANDREL-R10	SPANDREL-R10-LAY	0.7	3
SPANDREL-R15	SPANDREL-R15-LAY	0.4	3
W1A	W1A-LAY	0.7	3
W1B	W1B-LAY	0.7	3
W1D	W1D-LAY	0.7	3
W2A-FRM	W2A-FRM-LAY	0.7	3
W2A-INS	W2A-INS-LAY	0.7	3
W2B-FRM	W2B-FRM-LAY	0.7	3
W2B-INS	W2B-INS-LAY	0.7	3
W2D-FRM	W2D-FRM-LAY	0.7	3
W2D-INS	W2D-INS-LAY	0.7	3
W3A	W3A-LAY	0.7	3
W3B	W3B-LAY	0.7	3
W4A	W4A-LAY	0.7	3
W4B	W4B-LAY	0.7	3
W4C	W4C-LAY	0.7	3
W4D	W4D-LAY	0.7	3
WHC2.4U084	WHC2.4U084-LAY	0.7	3
WHC2.4U092	WHC2.4U092-LAY	0.7	3
WHC5U084	WHC5U084	0.7	3
WHC5U092	WHC5U092-LAY	0.7	3
WIZ	WIZ-LAY	0.7	3

ACM VAV BOX LIBRARY			
MODEL	**CFM**	**MIN RATIO**	**REHEAT CAP**
VAV1200A	1200	0.35	21000
VAV1200H	1200	0.30	18000
VAV1200L	1200	0.40	24000
VAV1500A	1500	0.35	26250
VAV1500H	1500	0.30	22500
VAV1500L	1500	0.40	30000
VAV2000A	2000	0.35	35000
VAV2000H	2000	0.30	30000
VAV2000L	2000	0.40	40000
VAV2500A	2500	0.35	43750
VAV2500H	2500	0.30	37500
VAV2500L	2500	0.40	50000
VAV3000A	3000	0.35	52500
VAV3000H	3000	0.30	45000
VAV3000L	3000	0.40	60000
VAV300A	300	0.35	5250
VAV300H	300	0.30	4500
VAV300L	300	0.40	6000
VAV3500A	3500	0.35	61250
VAV3500H	3500	0.30	52500
VAV3500L	3500	0.40	70000
VAV4000A	4000	0.35	70000
VAV4000H	4000	0.30	60000
VAV4000L	4000	0.40	80000
VAV4500A	4500	0.35	78750
VAV4500H	4500	0.30	67500
VAV4500L	4500	0.40	90000
VAV450A	450	0.35	7875
VAV450H	450	0.30	6750
VAV450L	450	0.40	9000

ACM VAV BOX LIBRARY			
MODEL	**CFM**	**MIN RATIO**	**REHEAT CAP**
VAV5000A	5000	0.35	87500
VAV5000H	5000	0.30	75000
VAV5000L	5000	0.40	100000
VAV600A	600	0.35	10500
VAV600H	600	0.30	9000
VAV600L	600	0.40	12000
VAV900A	900	0.35	15750
VAV900H	900	0.30	13500
VAV900L	900	0.40	18000

ACM PIU EQUIPMENT LIBRARY						
Model	**TYP**	**Cfm**	**M-C-R**	**F-C-R**	**FPI**	**ReheatCap**
PIU300AP	P	300	0.3	0.60	0.33	8100
PIU300AS	S	300	0.3	1.00	0.33	8100
PIU300HP	P	300	0.3	0.90	0.28	12000
PIU300HS	S	300	0.3	1.00	0.28	12000
PIU300LP	P	300	0.3	0.40	0.35	5400
PIU300LS	S	300	0.3	1.00	0.35	5400
PIU450AP	P	450	0.3	0.60	0.33	12000
PIU450AS	S	450	0.3	1.00	0.33	12000
PIU450HP	P	450	0.3	0.90	0.28	18200
PIU450HS	S	450	0.3	1.00	0.28	18200
PIU450LP	P	450	0.3	0.40	0.35	8100
PIU450LS	S	450	0.3	1.00	0.35	8100
PIU600AP	P	600	0.3	0.60	0.33	16200
PIU600AS	S	600	0.3	1.00	0.33	16200
PIU600HP	P	600	0.3	0.90	0.28	24300
PIU600HS	S	600	0.3	1.00	0.28	24300
PIU600LP	P	600	0.3	0.40	0.35	10800
PIU600LS	S	600	0.3	1.00	0.35	10800
PIU750AP	P	750	0.3	0.60	0.33	20250
PIU750AS	S	750	0.3	1.00	0.33	20250
PIU750HP	P	750	0.3	0.90	0.28	30400
PIU750HS	S	750	0.3	1.00	0.28	20250
PIU750LP	P	750	0.3	0.40	0.35	13500
PIU750LS	S	750	0.3	1.00	0.35	13500
PIU900AP	P	900	0.3	0.60	0.33	24300
PIU900AS	S	900	0.3	1.00	0.33	24300
PIU900HP	P	900	0.3	0.90	0.28	36500
PIU900HS	S	900	0.3	1.00	0.28	36500
PIU900LP	P	900	0.3	0.40	0.35	16200
PIU900LS	S	900	0.3	1.00	0.35	16200

ACM SMALL PACKAGE SPLIT AIR CONDITIONER										
Model	**Cap95**	**Cap82**	**EER**	**SEER**	**CFM**	**Cd**	**FPIcv**	**FPIvav**	**HCAP**	**AFUE**
ACSP17A	17000	18850	9.60	9.90	500	0.15	0.50	1.00	25000	82
ACSP17H	17000	17860	9.70	10.00	500	0.20	0.35	0.75	25000	84
ACSP17L	17000	20200	9.50	9.90	500	0.10	0.90	1.30	25000	80
ACSP22A	22000	24270	9.60	9.90	600	0.15	0.50	1.00	30000	82
ACSP22H	22000	24700	10.40	12.00	600	0.20	0.35	0.75	30000	84
ACSP22L	22000	24640	9.50	9.90	600	0.10	0.90	1.30	30000	82
ACSP28A	28000	31310	9.60	9.90	800	0.15	0.50	1.00	40000	84
ACSP28H	28000	31320	10.60	12.00	800	0.20	0.35	0.75	40000	80
ACSP28L	28000	31420	9.50	9.90	800	0.10	0.90	1.30	40000	82
ACSP34A	34000	36850	9.60	9.90	1100	0.15	0.50	1.00	55000	84
ACSP34H	34000	37770	10.50	12.00	1100	0.20	0.35	0.75	55000	80
ACSP34L	34000	38370	9.50	9.90	1100	0.10	0.90	1.30	55000	82
ACSP40A	40000	43360	9.60	9.90	1200	0.15	0.50	1.00	60000	84
ACSP40H	40000	42530	10.80	12.00	1200	0.20	0.35	0.75	60000	80
ACSP40L	40000	46820	9.50	9.90	1200	0.10	0.90	1.30	60000	82
ACSP46A	46000	49770	9.60	9.90	1600	0.15	0.50	1.00	80000	84
ACSP46H	46000	51400	10.50	12.00	1600	0.20	0.35	0.75	80000	80
ACSP46L	46000	49660	9.50	9.90	1600	0.10	0.90	1.30	80000	82
ACSP52A	52000	55500	9.60	9.90	1700	0.15	0.50	1.00	85000	84
ACSP52H	52000	56280	11.10	12.50	1700	0.20	0.35	0.75	85000	80
ACSP52L	52000	56650	9.50	9.90	1700	0.10	0.90	1.30	85000	82
ACSP58A	58000	62520	9.60	9.90	1800	0.15	0.50	1.00	90000	84
ACSP58H	58000	62290	10.80	12.00	1800	0.20	0.35	0.75	90000	80
ACSP58L	58000	63360	9.50	9.90	1800	0.10	0.90	1.30	90000	82
ACSP63A	63000	67460	9.60	9.90	1900	0.15	0.50	1.00	95000	84
ACSP63H	63000	68000	10.50	12.10	1900	0.20	0.35	0.75	95000	80
ACSP63L	63000	67830	9.50	9.90	1900	0.10	0.90	1.30	95000	82

ACM LARGE PACKAGE SPLIT AIR CONDITIONER LIBRARY

Model	Cap95	Cfm	BHPari	MotorEff	FPIcv	FPIvav	EER	HCap	AFUE
ACLP007A	80150	3100	0.23	0.810	0.50	1.00	9.00	93000	82
ACLP007H	79100	2800	0.21	0.875	0.35	0.75	9.20	84000	84
ACLP007L	77350	2500	0.18	0.810	0.90	1.30	8.90	75000	80
ACLP010A	114500	4500	0.41	0.850	0.50	1.00	9.00	135000	82
ACLP010H	113000	4000	0.34	0.917	0.35	0.75	9.20	120000	84
ACLP010L	110500	3500	0.30	0.850	0.90	1.30	8.90	105000	80
ACLP015A	171750	6750	0.85	0.850	0.50	1.00	8.70	202500	82
ACLP015H	169500	6000	0.67	0.917	0.35	0.75	9.00	180000	84
ACLP015L	165750	5250	0.38	0.850	0.90	1.30	8.50	157500	80
ACLP020A	229000	9000	1.60	0.850	0.50	1.00	8.70	270000	82
ACLP020H	226000	8000	1.23	0.917	0.35	0.75	9.00	240000	84
ACLP020L	221000	7000	0.92	0.850	0.90	1.30	8.50	210000	80
ACLP025A	292000	8750	1.34	0.850	0.50	1.00	8.70	262500	82
ACLP025H	281000	7000	0.79	0.917	0.35	0.75	9.00	210000	84
ACLP025L	271500	6000	0.50	0.850	0.90	1.30	8.50	180000	80
ACLP030A	352000	12000	2.13	0.850	0.50	1.00	8.70	360000	82
ACLP030H	345000	10500	1.40	0.917	0.35	0.75	9.00	315000	84
ACLP030L	337000	9000	1.09	0.850	0.90	1.30	8.50	270000	80
ACLP040A	483000	18000	4.13	0.860	0.50	0.75	8.70	540000	82
ACLP040H	476000	16000	3.02	0.910	0.35	0.75	9.00	480000	84
ACLP040L	467000	14000	2.12	0.860	0.90	1.30	8.50	420000	80
ACLP050A	589000	22500	7.60	0.860	0.50	1.00	8.70	675000	82
ACLP050H	580000	20000	5.49	0.910	0.35	0.75	9.00	600000	84
ACLP050L	569000	17500	3.75	0.860	0.90	1.30	8.50	525000	80
ACLP060A	723000	27000	7.26	0.880	0.50	1.00	8.70	810000	82
ACLP060H	712000	24000	5.41	0.930	0.35	0.75	9.00	720000	84
ACLP060L	698000	21000	3.91	0.880	0.90	1.30	8.50	630000	80
ACLP070A	811000	26000	6.60	0.880	0.50	1.00	8.50	780000	82
ACLP070H	801000	24000	5.41	0.930	0.35	0.75	8.80	720000	84
ACLP070L	815000	27000	7.26	0.880	0.90	1.30	8.20	810000	80
ACLP075A	883000	26000	6.60	0.880	0.50	1.00	8.50	780000	82
ACLP075H	873000	24000	5.41	0.930	0.35	0.75	8.80	720000	84

ACM LARGE PACKAGE SPLIT AIR CONDITIONER LIBRARY									
Model	**Cap95**	**Cfm**	**BHPari**	**MotorEff**	**FPIcv**	**FPIvav**	**EER**	**HCap**	**AFUE**
ACLP075L	862000	22000	3.91	0.880	0.90	1.30	8.20	660000	80
ACLP090A	1062000	42000	15.03	0.880	0.50	1.00	8.70	1260000	82
ACLP090H	1044000	37000	10.82	0.930	0.35	0.75	8.80	1110000	84
ACLP090L	1021000	32000	7.52	0.880	0.90	1.30	8.20	960000	80
ACLP105A	1229000	43000	15.99	0.890	0.50	1.00	8.50	1290000	82
ACLP105H	1213000	39000	12.39	0.941	0.35	0.75	8.80	1170000	84
ACLP105L	1193000	35000	9.40	0.880	0.90	1.30	8.20	1050000	80

ACM FAN COIL EQUIPMENT LIBRARY				
MODEL	**COOLCAP**	**HEATCAP**	**CFM**	**FPI**
FC008A	8400	12000	300	0.50
FC008H	8400	12000	300	0.35
FC008L	8400	12000	300	0.90
FC013A	12600	18000	450	0.50
FC013H	12600	18000	450	0.35
FC013L	12600	18000	450	0.90
FC017A	16800	24000	600	0.50
FC017H	16800	24000	600	0.35
FC017L	16800	24000	600	0.90
FC021A	21000	30000	750	0.50
FC021H	21000	30000	750	0.35
FC021L	21000	30000	750	0.90
FC028A	28000	40000	1000	0.50
FC028H	28000	40000	1000	0.35
FC028L	28000	40000	1000	0.90
FC035A	35000	50000	1250	0.50
FC035H	35000	50000	1250	0.35
FC035L	35000	50000	1250	0.90
FC042A	42000	60000	1500	0.50
FC042H	42000	60000	1500	0.35
FC042L	42000	60000	1500	0.90
FC056A	56000	80000	2000	0.50
FC056H	56000	80000	2000	0.35
FC056L	56000	80000	2000	0.90
FC070A	70000	100000	2500	0.50
FC070H	70000	100000	2500	0.35
FC070L	70000	100000	2500	0.90
FC084A	84000	120000	3000	0.50
FC084H	84000	120000	3000	0.35

ACM FAN COIL EQUIPMENT LIBRARY				
MODEL	COOLCAP	HEATCAP	CFM	FPI
FC084L	84000	120000	3000	0.90
FC098A	98000	140000	3500	0.50
FC098H	98000	140000	3500	0.35
FC098L	98000	140000	3500	0.90
FC112A	112000	160000	4000	0.50
FC112H	112000	160000	4000	0.35
FC112L	112000	160000	4000	0.90
FC126A	126000	180000	4500	0.50
FC126H	126000	180000	4500	0.35
FC126L	126000	180000	4500	0.90
FC140A	140000	200000	5000	0.50
FC140H	140000	200000	5000	0.35
FC140L	140000	200000	5000	0.90
FC168A	168000	240000	6000	0.50
FC168H	168000	240000	6000	0.35
FC168L	168000	240000	6000	0.90
FC196A	196000	280000	7000	0.50
FC196H	196000	280000	7000	0.35
FC196L	196000	280000	7000	0.90
FC224A	224000	320000	8000	0.50
FC224H	224000	320000	8000	0.35
FC224L	224000	320000	8000	0.90
FC252A	252000	360000	9000	0.50
FC252H	252000	360000	9000	0.35
FC252L	252000	360000	9000	0.90
FC280A	280000	400000	10000	0.50
FC280H	280000	400000	10000	0.35
FC280L	280000	400000	10000	0.90
FC350A	350000	500000	12500	0.50
FC350H	350000	500000	12500	0.35

ACM FAN COIL EQUIPMENT LIBRARY				
MODEL	**COOLCAP**	**HEATCAP**	**CFM**	**FPI**
FC350L	350000	500000	12500	0.90
FC420A	420000	600000	15000	0.50
FC420H	420000	600000	15000	0.35
FC420L	420000	600000	15000	0.90
FC490A	490000	700000	17500	0.50
FC490H	490000	700000	17500	0.35
FC490L	490000	700000	17500	0.90
FC560A	560000	800000	20000	0.50
FC560H	560000	800000	20000	0.35
FC560L	560000	800000	20000	0.90
FC700A	700000	1000000	25000	0.50
FC700H	700000	1000000	25000	0.35
FC700L	700000	1000000	25000	0.90
FC840A	840000	1200000	30000	0.50
FC840H	840000	1200000	30000	0.35
FC840L	840000	1200000	30000	0.90

ACM HEAT ONLY LIBRARY				
Model	**HeatCap**	**CFM**	**FPI**	**AFUE**
HEAT045A	45000	1000	0.50	82
HEAT045H	45000	1000	0.35	84
HEAT045L	45000	1000	0.90	80
HEAT063A	63000	1500	0.50	82
HEAT063H	63000	1500	0.35	84
HEAT063L	63000	1500	0.90	80
HEAT090A	90000	2000	0.50	82
HEAT090H	90000	2000	0.35	84
HEAT090L	90000	2000	0.90	80
HEAT108A	108000	2500	0.50	82
HEAT108H	108000	2500	0.35	84
HEAT108L	108000	2500	0.90	80
HEAT135A	135000	3000	0.50	82
HEAT135H	135000	3000	0.35	84
HEAT135L	135000	3000	0.90	80
HEAT153A	153000	3500	0.50	82
HEAT153H	153000	3500	0.35	84
HEAT153L	153000	3500	0.90	80
HEAT180A	180000	4000	0.50	82
HEAT180H	180000	4000	0.35	84
HEAT180L	180000	4000	0.90	80
HEAT215A	215000	5000	0.50	82
HEAT215H	215000	5000	0.35	84
HEAT215L	215000	5000	0.90	80
HEAT323A	323000	7500	0.50	82
HEAT323H	323000	7500	0.35	84
HEAT323L	323000	7500	0.90	80
HEAT450A	450000	10000	0.50	82
HEAT450H	450000	10000	0.35	84
HEAT450L	450000	10000	0.90	80

ACM HEAT ONLY LIBRARY				
Model	**HeatCap**	**CFM**	**FPI**	**AFUE**
HEAT538A	538000	12500	0.50	82
HEAT538H	538000	12500	0.35	84
HEAT538L	538000	12500	0.90	80
HEAT665A	665000	15000	0.50	82
HEAT665H	665000	15000	0.35	84
HEAT665L	665000	15000	0.90	80
HEAT900A	900000	20000	0.50	82
HEAT900H	900000	20000	0.35	84
HEAT900L	900000	20000	0.90	80

ACM HEAT PUMP EQUIPMENT LIBRARY

Model	Cap 95	Cap 82	HCap 47	HCap 17	EER	SEER	HSPF	Cop 47	Cop 17	Cfm	Cd	Fpi
HPSP108A	108000		110000	58700	9.00		7.32	3.00	2.00	3300		0.50
HPSP108H	108000		109800	56300	9.20		7.32	3.00	2.00	3300		0.35
HPSP108L	108000		109800	59000	8.90		7.68	3.10	2.00	3300		0.90
HPSP126A	126000		123400	68100	9.00		7.32	3.00	2.00	4300		0.50
HPSP126H	126000		111700	59900	9.60		7.32	3.00	2.00	4300		0.35
HPSP126L	126000		128100	68900	8.90		7.68	3.10	2.00	4300		0.90
HPSP162A	162000		150600	80200	8.90		7.00	2.90	2.00	5400		0.50
HPSP162H	162000		146400	77600	9.40		7.00	2.90	2.00	5400		0.35
HPSP162L	162000		148800	77200	8.50		7.00	2.90	2.00	5400		0.90
HPSP222A	222000		224200	115400	8.60		7.32	3.00	2.00	6400		0.50
HPSP222H	222000		215900	115000	8.80		7.32	3.00	2.00	6400		0.35
HPSP222L	222000		227700	123500	8.50		7.32	3.00	2.10	6400		0.90
HPSP22A	22000	24150	21600	11900	9.60	10.50	7.32	3.00	2.00	600	0.15	0.50
HPSP22H	22000	24050	20800	10900	11.10	12.00	8.40	3.30	2.00	600	0.20	0.35
HPSP22L	22000	23390	22000	12300	9.50	10.00	7.32	3.00	2.00	600	0.10	0.90
HPSP28A	28000	30420	27500	15400	9.60	10.40	7.32	3.00	2.00	800	0.15	0.50
HPSP28H	28000	30040	25400	13900	11.20	12.00	7.32	3.00	2.00	800	0.20	0.35
HPSP28L	28000	30800	28000	15800	9.50	9.90	7.32	3.00	2.00	800	0.10	0.90
HPSP34A	34000	36980	33500	18600	9.60	10.20	7.32	3.00	2.00	1100	0.15	0.50
HPSP34H	34000	37600	31100	18000	10.70	12.00	8.40	3.30	2.20	1100	0.20	0.35
HPSP34L	34000	37790	36300	19600	9.50	9.90	7.32	3.00	2.00	1100	0.10	0.90
HPSP40A	40000	43500	39600	22000	9.60	10.00	7.32	3.00	2.00	1200	0.15	0.50
HPSP40H	40000	44140	37200	20700	10.30	12.00	8.04	3.20	2.00	1200	0.20	0.35
HPSP40L	40000	44930	41400	24000	9.50	9.90	7.32	3.00	2.00	1200	0.10	0.90
HPSP46A	46000	50000	46200	25700	9.60	10.00	7.32	3.00	2.00	1600	0.15	0.50
HPSP46H	46000	51400	46500	25600	10.40	12.00	8.04	3.20	2.10	1600	0.20	0.35
HPSP46L	46000	49830	48100	26200	9.50	9.90	7.68	3.10	2.10	1600	0.10	0.90
HPSP52A	52000	56060	51300	28000	9.60	10.00	7.32	3.00	2.00	1700	0.15	0.50
HPSP52H	52000	56820	49300	28900	9.90	12.30	8.04	3.20	2.00	1700	0.20	0.35
HPSP52L	52000	56280	51400	30000	9.50	9.90	7.32	3.00	2.00	1700	0.10	0.90
HPSP58A	58000	62530	59000	33800	9.60	10.00	7.68	3.10	2.10	1800	0.15	0.50
HPSP58H	58000	64710	58000	31500	10.10	12.00	8.40	3.30	2.20	1800	0.20	0.35

ACM HEAT PUMP EQUIPMENT LIBRARY

Model	Cap 95	Cap 82	HCap 47	HCap 17	EER	SEER	HSPF	Cop 47	Cop 17	Cfm	Cd	Fpi
HPSP58L	58000	62140	60000	33900	9.50	9.90	7.32	3.00	2.10	1800	0.10	0.90
HPSP63A	63000	66900	60800	34300	9.60	10.00	7.32	3.00	2.00	1900	0.15	0.50
HPSP63H	63000	67260	58900	32100	9.70	10.50	7.32	3.00	2.00	1900	0.20	0.35
HPSP63L	63000	67190	59400	32600	9.50	9.90	7.32	3.00	2.00	1900	0.10	0.90
HPSP72A	72000		70600	38200	9.00		7.32	3.00	2.00	2400		0.50
HPSP72H	72000		71600	44400	9.50		7.68	3.10	2.00	2400		0.35
HPSP72L	72000		72000	35400	8.90		7.32	3.00	2.00	2400		0.90
HPSP90A	90000		90500	49300	9.00		7.32	3.00	2.00	2600		0.50
HPSP90H	90000		83400	54100	9.40		7.32	3.00	2.10	2600		0.35
HPSP90L	90000		88900	44400	8.90		7.32	3.00	2.00	2600		0.90

ACM WATER LOOP EQUIPMENT LIBRARY						
MODEL	COOLCAP	EER	HEATCAP	COP	CFM	FPI
WHP007A	7000	11.50	8050	4.00	230	0.50
WHP007H	7000	15.00	8050	4.50	230	0.35
WHP007L	7000	10.00	8050	3.80	230	0.85
WHP009A	9000	11.50	10350	4.00	300	0.50
WHP009H	9000	15.00	10350	4.50	300	0.35
WHP009L	9000	10.00	10350	3.80	300	0.85
WHP012A	12000	11.50	13800	4.00	400	0.50
WHP012H	12000	15.00	13800	4.50	400	0.35
WHP012L	12000	10.00	13800	3.80	400	0.85
WHP015A	15000	11.50	17250	4.00	500	0.50
WHP015H	15000	15.00	17250	4.50	500	0.35
WHP015L	15000	10.00	17250	3.80	500	0.85
WHP018A	18000	11.50	20700	4.00	600	0.50
WHP018H	18000	15.00	20700	4.50	600	0.35
WHP018L	18000	10.00	20700	3.80	600	0.85
WHP024A	24000	11.50	27600	4.00	800	0.50
WHP024H	24000	15.00	27600	4.50	800	0.35
WHP024L	24000	10.00	27600	3.80	800	0.85
WHP030A	30000	11.50	34500	4.00	1000	0.50
WHP030H	30000	15.00	34500	4.50	1000	0.35
WHP030L	30000	10.00	34500	3.80	1000	0.85
WHP036A	36000	11.50	41400	4.00	1200	0.50
WHP036H	36000	15.00	41400	4.50	1200	0.35
WHP036L	36000	10.00	41400	3.80	1200	0.85
WHP042A	42000	11.50	48300	4.00	1400	0.50
WHP042H	42000	15.00	48300	4.50	1400	0.35
WHP042L	42000	10.00	48300	3.80	1400	0.85
WHP048A	48000	11.50	55200	4.00	1600	0.50
WHP048H	48000	15.00	55200	4.50	1600	0.35
WHP048L	48000	10.00	55200	3.80	1600	0.85

ACM WATER LOOP EQUIPMENT LIBRARY						
MODEL	**COOLCAP**	**EER**	**HEATCAP**	**COP**	**CFM**	**FPI**
WHP060A	60000	11.50	69000	4.00	2000	0.50
WHP060H	60000	15.00	69000	4.50	2000	0.35
WHP060L	60000	10.00	69000	3.80	2000	0.85
WHP072A	72000	11.50	82800	4.00	2400	0.50
WHP072H	72000	15.00	82800	4.50	2400	0.35
WHP072L	72000	10.50	82800	3.80	2400	0.85
WHP084A	84000	11.50	96600	4.00	2800	0.50
WHP084H	84000	15.00	96600	4.50	2800	0.35
WHP084L	84000	10.50	96600	3.80	2800	0.85
WHP096A	96000	11.50	110400	4.00	3200	0.50
WHP096H	96000	15.00	110400	4.50	3200	0.35
WHP096L	96000	10.50	110400	3.80	3200	0.85
WHP108A	108000	11.50	124200	4.00	3600	0.50
WHP108H	108000	15.00	124200	4.50	3600	0.35
WHP108L	108000	10.50	124200	3.80	3600	0.85
WHP120A	120000	11.50	138000	4.00	4000	0.50
WHP120H	120000	15.00	138000	4.50	4000	0.35
WHP120L	120000	10.50	138000	3.80	4000	0.85
WHP132A	132000	11.50	151800	4.00	4400	0.50
WHP132H	132000	15.00	151800	4.50	4400	0.35
WHP132L	132000	10.50	151800	3.80	4400	0.85

ACM EVAPORATIVE EQUIPMENT LIBRARY						
Model	**Cfm**	**IndirEff**	**DirEff**	**FPI**	**FPIsup**	**ACbackUp**
EVAP1000AIB	1000	85		0.696	0.500	ACSP58A
EVAP1000AID	1000	85	78	0.696	0.500	
EVAP1000HIB	1000	85		0.546	0.240	ACSP58H
EVAP1000HID	1000	85	78	0.546	0.240	
EVAP1000LIB	1000	85		0.996	0.600	ACSP58L
EVAP1000LID	1000	85	78	0.996	0.600	
EVAP1300AIB	1300	85		0.696	0.500	ACSP63A
EVAP1300AID	1300	85	78	0.696	0.500	
EVAP1300HIB	1300	85		0.546	0.240	ACSP63H
EVAP1300HID	1300	85	78	0.546	0.240	
EVAP1300LIB	1300	85		0.996	0.600	ACSP63L
EVAP1300LID	1300	85	78	0.996	0.600	
EVAP1500AIB	1500	85		0.696	0.500	ACLP007A
EVAP1500AID	1500	85	78	0.696	0.500	
EVAP1500HIB	1500	85		0.546	0.240	ACLP007H
EVAP1500HID	1500	85	78	0.546	0.240	
EVAP1500LIB	1500	85		0.996	0.600	ACLP007L
EVAP1500LID	1500	85	78	0.996	0.600	
EVAP2000AIB	2000	85		0.696	0.500	ACLP007A
EVAP2000AID	2000	85	78	0.696	0.500	
EVAP2000HIB	2000	85		0.546	0.240	ACLP007H
EVAP2000HID	2000	85	78	0.546	0.240	
EVAP2000LIB	2000	85		0.996	0.600	ACLP007L
EVAP2000LID	2000	85	78	0.996	0.600	
EVAP2500AIB	2500	85		0.696	0.500	ACLP007A
EVAP2500AID	2500	85	78	0.696	0.500	
EVAP2500HIB	2500	85		0.546	0.240	ACLP007H
EVAP2500HID	2500	85	78	0.546	0.240	
EVAP2500LIB	2500	85		0.996	0.600	ACLP007L
EVAP2500LID	2500	85	78	0.996	0.600	

ACM SYSTEM EQUIPMENT LIBRARY					
MODEL	**COOLCAP**	**HEATCAP**	**CFM**	**FPIcv**	**FPIvav**
SYS0025A	25000	33929	893	0.50	1.00
SYS0025H	25000	33929	893	0.35	0.75
SYS0025L	25000	33929	893	0.90	1.35
SYS0038A	38000	51571	1357	0.50	1.00
SYS0038H	38000	51571	1357	0.35	0.75
SYS0038L	38000	51571	1357	0.90	1.35
SYS0050A	50000	67857	1786	0.50	1.00
SYS0050H	50000	67857	1786	0.35	0.75
SYS0050L	50000	67857	1786	0.90	1.35
SYS0063A	63000	85500	2250	0.50	1.00
SYS0063H	63000	85500	2250	0.35	0.75
SYS0063L	63000	85500	2250	0.90	1.35
SYS0075A	75000	101786	2679	0.50	1.00
SYS0075H	75000	101786	2679	0.35	0.75
SYS0075L	75000	101786	2679	0.90	1.35
SYS0088A	88000	119429	3143	0.50	1.00
SYS0088H	88000	119429	3143	0.35	0.75
SYS0088L	88000	119429	3143	0.90	1.35
SYS0100A	100000	135714	3571	0.50	1.00
SYS0100H	100000	135714	3571	0.35	0.75
SYS0100L	100000	135714	3571	0.90	1.35
SYS0125A	125000	169643	4464	0.50	1.00
SYS0125H	125000	169643	4464	0.35	0.75
SYS0125L	125000	169643	4464	0.90	1.35
SYS0188A	188000	255143	6714	0.50	1.00
SYS0188H	188000	255143	6714	0.35	0.75
SYS0188L	188000	255143	6714	0.90	1.35
SYS0250A	250000	339286	8929	0.50	1.00
SYS0250H	250000	339286	8929	0.35	0.75
SYS0250L	250000	339286	8929	0.90	1.35

ACM SYSTEM EQUIPMENT LIBRARY					
MODEL	**COOLCAP**	**HEATCAP**	**CFM**	**FPIcv**	**FPIvav**
SYS0380A	380000	515714	13571	0.50	1.00
SYS0380H	380000	515714	13571	0.35	0.75
SYS0380L	380000	515714	13571	0.90	1.35
SYS0500A	500000	678571	17857	0.50	1.00
SYS0500H	500000	678571	17857	0.35	0.75
SYS0500L	500000	678571	17857	0.90	1.35
SYS0625A	625000	848214	22321	0.50	1.00
SYS0625H	625000	848214	22321	0.35	0.75
SYS0625L	625000	848214	22321	0.90	1.35
SYS0750A	750000	1017857	26786	0.50	1.00
SYS0750H	750000	1017857	26786	0.35	0.75
SYS0750L	750000	1017857	26786	0.90	1.35
SYS1000A	1000000	1357143	33000	0.50	1.00
SYS1000H	1000000	1357143	33000	0.35	0.75
SYS1000L	1000000	1357143	33000	0.90	1.35

ACM ELECTRICAL CHILLER LIBRARY		
Model	**CoolCap**	**COP**
COOL0180A	180000	4.00
COOL0180H	180000	4.20
COOL0180L	180000	3.80
COOL0240A	240000	4.00
COOL0240H	240000	4.20
COOL0240L	240000	3.80
COOL0300A	300000	4.00
COOL0300H	300000	4.20
COOL0300L	300000	3.80
COOL0360A	360000	4.00
COOL0360H	360000	4.20
COOL0360L	360000	3.80
COOL0480A	480000	4.00
COOL0480H	480000	4.20
COOL0480L	480000	3.80
COOL0900A	900000	4.00
COOL0900H	900000	4.20
COOL0900L	900000	3.80
COOL1200A	1200000	4.00
COOL1200H	1200000	4.20
COOL1200L	1200000	3.80
COOL1800A	1800000	4.40
COOL1800H	1800000	4.60
COOL1800L	1800000	4.20
COOL2100A	2100000	4.40
COOL2100H	2100000	4.60
COOL2100L	2100000	4.20
COOL2400A	2400000	4.40
COOL2400H	2400000	4.60

ACM ELECTRICAL CHILLER LIBRARY		
Model	**CoolCap**	**COP**
COOL2400L	2400000	4.20
COOL3000A	3000000	4.40
COOL3000H	3000000	4.60
COOL3000L	3000000	4.20
COOL3600A	3600000	5.60
COOL3600H	3600000	5.80
COOL3600L	3600000	5.20
COOL4200A	4200000	5.60
COOL4200H	4200000	5.80
COOL4200L	4200000	5.20

ACM ABSORPTION CHILLER LIBRARY			
Model	**Cooling Capacity**	**HIR**	**EIR**
ABSOR10180A	180000	1.60	0.0040
ABSOR10180H	180000	1.55	0.0035
ABSOR10180L	180000	1.65	0.0045
ABSOR10240A	240000	1.60	0.0040
ABSOR10240H	240000	1.55	0.0035
ABSOR10240L	240000	1.65	0.0045
ABSOR10300A	300000	1.60	0.0040
ABSOR10300H	300000	1.55	0.0035
ABSOR10300L	300000	1.65	0.0045
ABSOR10360A	360000	1.60	0.0040
ABSOR10360H	360000	1.55	0.0035
ABSOR10360L	360000	1.65	0.0045
ABSOR10480A	480000	1.60	0.0040
ABSOR10480H	480000	1.55	0.0035
ABSOR10480L	480000	1.65	0.0045
ABSOR10900A	900000	1.60	0.0040
ABSOR10900H	900000	1.55	0.0035
ABSOR10900L	900000	1.65	0.0045
ABSOR11200A	1200000	1.60	0.0040
ABSOR11200H	1200000	1.65	0.0035

ACM ABSORPTION CHILLER LIBRARY			
Model	**Cooling Capacity**	**HIR**	**EIR**
ABSOR11200L	1200000	1.55	0.0045
ABSOR11800A	1800000	1.60	0.0040
ABSOR11800H	1800000	1.55	0.0035
ABSOR11800L	1800000	1.65	0.0045
ABSOR12100A	2100000	1.60	0.0040
ABSOR12100H	2100000	1.55	0.0035
ABSOR12100L	2100000	1.65	0.0045
ABSOR12400A	2400000	1.60	0.0040
ABSOR12400H	2400000	1.55	0.0035
ABSOR12400L	2400000	1.65	0.0045
ABSOR13000A	3000000	1.60	0.0040
ABSOR13000H	3000000	1.55	0.0035
ABSOR13000L	3000000	1.65	0.0045
ABSOR13600A	3600000	1.60	0.0040
ABSOR13600H	3600000	1.55	0.0035
ABSOR13600L	3600000	1.65	0.0045
ABSOR14200A	4200000	1.60	0.0040
ABSOR14200H	4200000	1.55	0.0035
ABSOR14200L	4200000	1.65	0.0045
ABSOR20180A	180000	1.00	0.0070
ABSOR20180H	180000	1.00	0.0065

ACM ABSORPTION CHILLER LIBRARY			
Model	**Cooling Capacity**	**HIR**	**EIR**
ABSOR20180L	180000	1.00	0.0075
ABSOR20240A	240000	1.00	0.0070
ABSOR20240H	240000	1.00	0.0065
ABSOR20240L	240000	1.00	0.0075
ABSOR20360A	360000	1.00	0.0070
ABSOR20360H	360000	1.00	0.0065
ABSOR20360L	360000	1.00	0.0075
ABSOR20480A	480000	1.00	0.0070
ABSOR20480H	480000	1.00	0.0065
ABSOR20480L	480000	1.00	0.0075
ABSOR20900A	900000	1.00	0.0070
ABSOR20900H	900000	1.00	0.0065
ABSOR20900L	900000	1.00	0.0075
ABSOR21200A	1200000	1.00	0.0070
ABSOR21200H	1200000	1.00	0.0065
ABSOR21200L	1200000	1.00	0.0075
ABSOR21800A	1800000	1.00	0.0070
ABSOR21800H	1800000	1.00	0.0065
ABSOR21800L	1800000	1.00	0.0075
ABSOR22100A	2100000	1.00	0.0070
ABSOR22100H	2100000	1.00	0.0065

ACM ABSORPTION CHILLER LIBRARY			
Model	**Cooling Capacity**	**HIR**	**EIR**
ABSOR22100L	2100000	1.00	0.0075
ABSOR22400A	2400000	1.00	0.0070
ABSOR22400H	2400000	1.00	0.0065
ABSOR22400L	2400000	1.00	0.0075
ABSOR23000A	3000000	1.00	0.0070
ABSOR23000H	3000000	1.00	0.0065
ABSOR23000L	3000000	1.00	0.0075
ABSOR23600A	3600000	1.00	0.0070
ABSOR23600H	3600000	1.00	0.0065
ABSOR23600L	3600000	1.00	0.0075
ABSOR24200A	4200000	1.00	0.0070
ABSOR24200H	4200000	1.00	0.0065
ABSOR24200L	4200000	1.00	0.0075
ABSORG0180A	180000	1.00	0.0071
ABSORG0180H	180000	1.00	0.0066
ABSORG0180L	180000	1.00	0.0076
ABSORG0240A	240000	1.00	0.0071
ABSORG0240H	240000	1.00	0.0066
ABSORG0240L	240000	1.00	0.0076
ABSORG0360A	360000	1.00	0.0071
ABSORG0360H	360000	1.00	0.0066

ACM ABSORPTION CHILLER LIBRARY

Model	Cooling Capacity	HIR	EIR
ABSORG0360L	360000	1.00	0.0076
ABSORG0480A	480000	1.00	0.0071
ABSORG0480H	480000	1.00	0.0066
ABSORG0480L	480000	1.00	0.0076
ABSORG0900A	900000	1.00	0.0071
ABSORG0900H	900000	1.00	0.0066
ABSORG0900L	900000	1.00	0.0076
ABSORG1200A	1200000	1.00	0.0071
ABSORG1200H	1200000	1.00	0.0066
ABSORG1200L	1200000	1.00	0.0076
ABSORG1800A	1800000	1.00	0.0071
ABSORG1800H	1800000	1.00	0.0066
ABSORG1800L	1800000	1.00	0.0076
ABSORG2100A	2100000	1.00	0.0071
ABSORG2100H	2100000	1.00	0.0066
ABSORG2100L	2100000	1.00	0.0076
ABSORG2400A	2400000	1.00	0.0071
ABSORG2400H	2400000	1.00	0.0066
ABSORG2400L	2400000	1.00	0.0076
ABSORG3000A	3000000	1.00	0.0071
ABSORG3000H	3000000	1.00	0.0066

ACM ABSORPTION CHILLER LIBRARY			
Model	**Cooling Capacity**	**HIR**	**EIR**
ABSORG3000L	3000000	1.00	0.0076
ABSORG3600A	3600000	1.00	0.0071
ABSORG3600H	3600000	1.00	0.0066
ABSORG3600L	3600000	1.00	0.0076
ABSORG4200A	4200000	1.00	0.0071
ABSORG4200H	4200000	1.00	0.0066
ABSORG4200L	4200000	1.00	0.0076

ACM TOWER LIBRARY	
Model	**CoolCap**
TOWER0220	220000
TOWER0260	260000
TOWER0330	330000
TOWER0390	390000
TOWER0500	500000
TOWER0930	930000
TOWER1250	1250000
TOWER1870	1870000
TOWER2160	2160000
TOWER2480	2480000
TOWER3100	3100000
TOWER3700	3700000
TOWER4300	4300000

ACM BOILER LIBRARY		
Model	**Size**	**Afue**
BOILER00100A	100000	82
BOILER00100H	100000	84
BOILER00100L	100000	80
BOILER00250A	250000	82
BOILER00250H	250000	84
BOILER00250L	250000	80
BOILER00500A	500000	82
BOILER00500H	500000	84
BOILER00500L	500000	80
BOILER00750A	750000	82
BOILER00750H	750000	84
BOILER00750L	750000	80
BOILER01000A	1000000	82
BOILER01000H	1000000	84
BOILER01000L	1000000	80
BOILER01500A	1500000	82
BOILER01500H	1500000	84
BOILER01500L	1500000	80
BOILER02000A	2000000	82
BOILER02000H	2000000	84
BOILER02000L	2000000	80
BOILER02500A	2500000	82
BOILER02500H	2500000	84
BOILER02500L	2500000	80
BOILER03000A	3000000	82
BOILER03000H	3000000	84
BOILER03000L	3000000	80

ACM VAV BOX SELECTED			
Test	**System**	**Zone**	**Model**
A12B13	SYS-1	EAST1	VAV900A
A12B13	SYS-1	EAST2	VAV1200A
A12B13	SYS-1	NORTH1	VAV900A
A12B13	SYS-1	NORTH2	VAV900A
A12B13	SYS-1	SOUTH1	VAV1500A
A12B13	SYS-1	SOUTH2	VAV1500A
A12B13	SYS-1	WEST1	VAV1200A
A12B13	SYS-1	WEST2	VAV1200A
A13B06	SYS-1	EAST1	VAV900A
A13B06	SYS-1	EAST2	VAV1200A
A13B06	SYS-1	NORTH1	VAV600A
A13B06	SYS-1	NORTH2	VAV900A
A13B06	SYS-1	SOUTH1	VAV1200A
A13B06	SYS-1	SOUTH2	VAV1500A
A13B06	SYS-1	WEST1	VAV1200A
A13B06	SYS-1	WEST2	VAV1200A
A14B16	SYS-1	EAST1	VAV900A
A14B16	SYS-1	EAST2	VAV900A
A14B16	SYS-1	NORTH1	VAV600A
A14B16	SYS-1	NORTH2	VAV900A
A14B16	SYS-1	SOUTH1	VAV1200A
A14B16	SYS-1	SOUTH2	VAV1500A
A14B16	SYS-1	WEST1	VAV900A
A14B16	SYS-1	WEST2	VAV1200A
A17B16	SYS-1	EAST1	VAV900A
A17B16	SYS-1	EAST2	VAV900A
A17B16	SYS-1	NORTH1	VAV600A
A17B16	SYS-1	NORTH2	VAV600A
A17B16	SYS-1	SOUTH1	VAV900A
A17B16	SYS-1	SOUTH2	VAV900A

ACM VAV BOX SELECTED			
Test	**System**	**Zone**	**Model**
A17B16	SYS-1	WEST1	VAV900A
A17B16	SYS-1	WEST2	VAV900A
B11B13	SYS-1	EAST1	VAV1500L
B11B13	SYS-1	EAST2	VAV2000L
B11B13	SYS-1	NORTH1	VAV1200L
B11B13	SYS-1	NORTH2	VAV1200L
B11B13	SYS-1	SOUTH1	VAV2000L
B11B13	SYS-1	SOUTH2	VAV2000L
B11B13	SYS-1	WEST1	VAV2000L
B11B13	SYS-1	WEST2	VAV2000L
B12B13	SYS-1	EAST1	VAV2000L
B12B13	SYS-1	EAST2	VAV2000L
B12B13	SYS-1	NORTH1	VAV1200L
B12B13	SYS-1	NORTH2	VAV1500L
B12B13	SYS-1	SOUTH1	VAV2000L
B12B13	SYS-1	SOUTH2	VAV2500L
B12B13	SYS-1	WEST1	VAV2000L
B12B13	SYS-1	WEST2	VAV2000L
B13B13	SYS-1	EAST1	VAV2000L
B13B13	SYS-1	EAST2	VAV2000L
B13B13	SYS-1	NORTH1	VAV1200L
B13B13	SYS-1	NORTH2	VAV1200L
B13B13	SYS-1	SOUTH1	VAV2500L
B13B13	SYS-1	SOUTH2	VAV2500L
B13B13	SYS-1	WEST1	VAV2000L
B13B13	SYS-1	WEST2	VAV2500L
B14B06	SYS-1	EAST1	VAV2000H
B14B06	SYS-1	EAST2	VAV2000H
B14B06	SYS-1	NORTH1	VAV1200H
B14B06	SYS-1	NORTH2	VAV1200H
B14B06	SYS-1	SOUTH1	VAV2000H

ACM VAV BOX SELECTED			
Test	**System**	**Zone**	**Model**
B14B06	SYS-1	SOUTH2	VAV2500H
B14B06	SYS-1	WEST1	VAV2000H
B14B06	SYS-1	WEST2	VAV2000H
B15B16	SYS-1	EAST1	VAV2000H
B15B16	SYS-1	EAST2	VAV2000H
B15B16	SYS-1	NORTH1	VAV900H
B15B16	SYS-1	NORTH2	VAV1200H
B15B16	SYS-1	SOUTH1	VAV2000H
B15B16	SYS-1	SOUTH2	VAV2500H
B15B16	SYS-1	WEST1	VAV2000H
B15B16	SYS-1	WEST2	VAV2500H
B21B12	SYS-1	EAST1	VAV1500A
B21B12	SYS-1	EAST2	VAV1500A
B21B12	SYS-1	NORTH1	VAV1200A
B21B12	SYS-1	NORTH2	VAV1200A
B21B12	SYS-1	SOUTH1	VAV1500A
B21B12	SYS-1	SOUTH2	VAV2000A
B21B12	SYS-1	WEST1	VAV2000A
B21B12	SYS-1	WEST2	VAV2000A
B22B12	SYS-1	EAST1	VAV1200A
B22B12	SYS-1	EAST2	VAV1200A
B22B12	SYS-1	NORTH1	VAV1200A
B22B12	SYS-1	NORTH2	VAV1200A
B22B12	SYS-1	SOUTH1	VAV1500A
B22B12	SYS-1	SOUTH2	VAV1500A
B22B12	SYS-1	WEST1	VAV1500A
B22B12	SYS-1	WEST2	VAV1500A
B23B12	SYS-1	EAST1	VAV1200A
B23B12	SYS-1	EAST2	VAV1200A
B23B12	SYS-1	NORTH1	VAV900A
B23B12	SYS-1	NORTH2	VAV1200A

ACM VAV BOX SELECTED			
Test	**System**	**Zone**	**Model**
B23B12	SYS-1	SOUTH1	VAV1500A
B23B12	SYS-1	SOUTH2	VAV1500A
B23B12	SYS-1	WEST1	VAV1500A
B23B12	SYS-1	WEST2	VAV1500A
B24B03	SYS-1	EAST1	VAV1200A
B24B03	SYS-1	EAST2	VAV1200A
B24B03	SYS-1	NORTH1	VAV900A
B24B03	SYS-1	NORTH2	VAV900A
B24B03	SYS-1	SOUTH1	VAV1200A
B24B03	SYS-1	SOUTH2	VAV1200A
B24B03	SYS-1	WEST1	VAV1200A
B24B03	SYS-1	WEST2	VAV1500A
C21B10	SYS-1	EAST2	VAV2000A
C21B10	SYS-1	NORTH1	VAV1500A
C21B10	SYS-1	NORTH2	VAV1200A
C21B10	SYS-1	SOUTH1	VAV2500A
C21B10	SYS-1	SOUTH2	VAV2500A
C21B10	SYS-1	WEST2	VAV2000A
C21B10	SYS-2	INT1	VAV600A
C21B10	SYS-2	INT2	VAV900A
C22C16	SYS-1	ZONE1E	VAV1500A
C22C16	SYS-1	ZONE1I	VAV900A
C22C16	SYS-1	ZONE1N	VAV1200A
C22C16	SYS-1	ZONE1S	VAV1500A
C22C16	SYS-1	ZONE3I	VAV900A
C22C16	SYS-1	ZONE3S	VAV1200A
C22C16	SYS-2	ZONE1W	VAV1500A
C22C16	SYS-2	ZONE3E	VAV2000A
C22C16	SYS-2	ZONE3N	VAV1200A
C22C16	SYS-2	ZONE3W	VAV2000A
E21B16	SYS-1	EAST1	VAV1200A

ACM VAV BOX SELECTED			
Test	**System**	**Zone**	**Model**
E21B16	SYS-1	EAST2	VAV1200A
E21B16	SYS-1	INT1	VAV900A
E21B16	SYS-1	INT2	VAV900A
E21B16	SYS-1	NORTH1	VAV600A
E21B16	SYS-1	NORTH2	VAV900A
E21B16	SYS-1	SOUTH1	VAV1500A
E21B16	SYS-1	SOUTH2	VAV1500A
E21B16	SYS-1	WEST1	VAV1200A
E21B16	SYS-1	WEST2	VAV1200A
E22B16	SYS-1	EAST1	VAV1200A
E22B16	SYS-1	EAST2	VAV1200A
E22B16	SYS-1	INT1	VAV900A
E22B16	SYS-1	INT2	VAV900A
E22B16	SYS-1	NORTH1	VAV900A
E22B16	SYS-1	NORTH2	VAV900A
E22B16	SYS-1	SOUTH1	VAV1500A
E22B16	SYS-1	SOUTH2	VAV1500A
E22B16	SYS-1	WEST1	VAV1200A
E22B16	SYS-1	WEST2	VAV1500A
E23B16	SYS-1	EAST1	VAV1200A
E23B16	SYS-1	EAST2	VAV1200A
E23B16	SYS-1	INT1	VAV900A
E23B16	SYS-1	INT2	VAV1200A
E23B16	SYS-1	NORTH1	VAV900A
E23B16	SYS-1	NORTH2	VAV900A
E23B16	SYS-1	SOUTH1	VAV1500A
E23B16	SYS-1	SOUTH2	VAV1500A
E23B16	SYS-1	WEST1	VAV1500A
E23B16	SYS-1	WEST2	VAV1500A
E24B12	SYS-1	EAST1	VAV1200H
E24B12	SYS-1	EAST2	VAV1200H

ACM VAV BOX SELECTED			
Test	**System**	**Zone**	**Model**
E24B12	SYS-1	INT1	VAV900H
E24B12	SYS-1	INT2	VAV900H
E24B12	SYS-1	NORTH1	VAV900H
E24B12	SYS-1	NORTH2	VAV900H
E24B12	SYS-1	SOUTH1	VAV2000H
E24B12	SYS-1	SOUTH2	VAV2000H
E24B12	SYS-1	WEST1	VAV1500H
E24B12	SYS-1	WEST2	VAV2000H
E25B12	SYS-1	EAST1	VAV1200H
E25B12	SYS-1	EAST2	VAV1500H
E25B12	SYS-1	INT1	VAV900H
E25B12	SYS-1	INT2	VAV900H
E25B12	SYS-1	NORTH1	VAV900H
E25B12	SYS-1	NORTH2	VAV1200H
E25B12	SYS-1	SOUTH1	VAV2000H
E25B12	SYS-1	SOUTH2	VAV2000H
E25B12	SYS-1	WEST1	VAV1500H
E25B12	SYS-1	WEST2	VAV2000H
E26B12	SYS-1	EAST1	VAV1500H
E26B12	SYS-1	EAST2	VAV1500H
E26B12	SYS-1	INT1	VAV900H
E26B12	SYS-1	INT2	VAV1200H
E26B12	SYS-1	NORTH1	VAV1200H
E26B12	SYS-1	NORTH2	VAV1200H
E26B12	SYS-1	SOUTH1	VAV2000H
E26B12	SYS-1	SOUTH2	VAV2000H
E26B12	SYS-1	WEST1	VAV1500H
E26B12	SYS-1	WEST2	VAV2000H
F13B12	SYS-1	EAST1	VAV2000H
F13B12	SYS-1	EAST2	VAV2000H
F13B12	SYS-1	NORTH1	VAV1200H

ACM VAV BOX SELECTED			
Test	**System**	**Zone**	**Model**
F13B12	SYS-1	NORTH2	VAV1500H
F13B12	SYS-1	SOUTH1	VAV2000H
F13B12	SYS-1	SOUTH2	VAV2500H
F13B12	SYS-1	WEST1	VAV2000H
F13B12	SYS-1	WEST2	VAV2000H
F14B12	SYS-1	EAST1	VAV1500H
F14B12	SYS-1	EAST2	VAV2000H
F14B12	SYS-1	NORTH1	VAV1200H
F14B12	SYS-1	NORTH2	VAV1200H
F14B12	SYS-1	SOUTH1	VAV2000H
F14B12	SYS-1	SOUTH2	VAV2000H
F14B12	SYS-1	WEST1	VAV2000H
F14B12	SYS-1	WEST2	VAV2000H
G15B03	SYS-1	EAST1	VAV3000A
G15B03	SYS-1	EAST2	VAV3500A
G15B03	SYS-1	NORTH1	VAV2000A
G15B03	SYS-1	NORTH2	VAV2000A
G15B03	SYS-1	SOUTH1	VAV3500A
G15B03	SYS-1	SOUTH2	VAV4000A
G15B03	SYS-1	WEST1	VAV3500A
G15B03	SYS-1	WEST2	VAV3500A
G15B03	SYS-2	INT1	VAV300A
G15B03	SYS-2	INT2	VAV450A
G16B16	SYS-1	EAST1	VAV600A
G16B16	SYS-1	EAST2	VAV900A
G16B16	SYS-1	NORTH1	VAV450A
G16B16	SYS-1	NORTH2	VAV450A
G16B16	SYS-1	SOUTH1	VAV900A
G16B16	SYS-1	SOUTH2	VAV900A
G16B16	SYS-1	WEST1	VAV900A
G16B16	SYS-1	WEST2	VAV900A

ACM VAV BOX SELECTED			
Test	**System**	**Zone**	**Model**
G16B16	SYS-2	INT1	VAV1200A
G16B16	SYS-2	INT2	VAV1500A
O21B13	SYS-1	EAST1	VAV2000A
O21B13	SYS-1	EAST2	VAV2000A
O21B13	SYS-1	INT1	VAV900A
O21B13	SYS-1	INT2	VAV1200A
O21B13	SYS-1	NORTH1	VAV1200A
O21B13	SYS-1	NORTH2	VAV1500A
O21B13	SYS-1	SOUTH1	VAV2000A
O21B13	SYS-1	SOUTH2	VAV2500A
O21B13	SYS-1	WEST1	VAV2000A
O21B13	SYS-1	WEST2	VAV2000A
O22B13	SYS-1	EAST1	VAV2000A
O22B13	SYS-1	EAST2	VAV2000A
O22B13	SYS-1	INT1	VAV900A
O22B13	SYS-1	INT2	VAV1200A
O22B13	SYS-1	NORTH1	VAV1200A
O22B13	SYS-1	NORTH2	VAV1500A
O22B13	SYS-1	SOUTH1	VAV2000A
O22B13	SYS-1	SOUTH2	VAV2500A
O22B13	SYS-1	WEST1	VAV2000A
O22B13	SYS-1	WEST2	VAV2000A
O23B13	SYS-1	EAST1	VAV2000A
O23B13	SYS-1	EAST2	VAV2000A
O23B13	SYS-1	INT1	VAV900A
O23B13	SYS-1	INT2	VAV1200A
O23B13	SYS-1	NORTH1	VAV1200A
O23B13	SYS-1	NORTH2	VAV1500A
O23B13	SYS-1	SOUTH1	VAV2000A
O23B13	SYS-1	SOUTH2	VAV2500A
O23B13	SYS-1	WEST1	VAV2000A

ACM VAV BOX SELECTED			
Test	**System**	**Zone**	**Model**
O23B13	SYS-1	WEST2	VAV2000A
O24B13	SYS-1	EAST1	VAV2000A
O24B13	SYS-1	EAST2	VAV2000A
O24B13	SYS-1	INT1	VAV900A
O24B13	SYS-1	INT2	VAV1200A
O24B13	SYS-1	NORTH1	VAV1200A
O24B13	SYS-1	NORTH2	VAV1500A
O24B13	SYS-1	SOUTH1	VAV2000A
O24B13	SYS-1	SOUTH2	VAV2500A
O24B13	SYS-1	WEST1	VAV2000A
O24B13	SYS-1	WEST2	VAV2000A
O41B13	SYS-1	EAST1	VAV2000L
O41B13	SYS-1	EAST2	VAV2000L
O41B13	SYS-1	INT1	VAV900L
O41B13	SYS-1	INT2	VAV1200L
O41B13	SYS-1	NORTH1	VAV1200L
O41B13	SYS-1	NORTH2	VAV1500L
O41B13	SYS-1	SOUTH1	VAV2000L
O41B13	SYS-1	SOUTH2	VAV2500L
O41B13	SYS-1	WEST1	VAV2000L
O41B13	SYS-1	WEST2	VAV2000L
O61B11	SYS-1	EAST1	VAV2000A
O61B11	SYS-1	EAST2	VAV2000A
O61B11	SYS-1	INT1	VAV900A
O61B11	SYS-1	INT2	VAV1200A
O61B11	SYS-1	NORTH1	VAV1200A
O61B11	SYS-1	NORTH2	VAV1500A
O61B11	SYS-1	SOUTH1	VAV2000A
O61B11	SYS-1	SOUTH2	VAV2500A
O61B11	SYS-1	WEST1	VAV2000A
O61B11	SYS-1	WEST2	VAV2000A

ACM VAV BOX SELECTED			
Test	**System**	**Zone**	**Model**
O62B11	SYS-1	EAST1	VAV2000A
O62B11	SYS-1	EAST2	VAV2000A
O62B11	SYS-1	INT1	VAV900A
O62B11	SYS-1	INT2	VAV1200A
O62B11	SYS-1	NORTH1	VAV1200A
O62B11	SYS-1	NORTH2	VAV1500A
O62B11	SYS-1	SOUTH1	VAV2000A
O62B11	SYS-1	SOUTH2	VAV2500A
O62B11	SYS-1	WEST1	VAV2000A
O62B11	SYS-1	WEST2	VAV2000A
O63B11	SYS-1	EAST1	VAV2000A
O63B11	SYS-1	EAST2	VAV2000A
O63B11	SYS-1	INT1	VAV900A
O63B11	SYS-1	INT2	VAV1200A
O63B11	SYS-1	NORTH1	VAV1200A
O63B11	SYS-1	NORTH2	VAV1500A
O63B11	SYS-1	SOUTH1	VAV2000A
O63B11	SYS-1	SOUTH2	VAV2500A
O63B11	SYS-1	WEST1	VAV2000A
O63B11	SYS-1	WEST2	VAV2000A
O64B11	SYS-1	EAST1	VAV2000A
O64B11	SYS-1	EAST2	VAV2000A
O64B11	SYS-1	INT1	VAV900A
O64B11	SYS-1	INT2	VAV1200A
O64B11	SYS-1	NORTH1	VAV1200A
O64B11	SYS-1	NORTH2	VAV1500A
O64B11	SYS-1	SOUTH1	VAV2000A
O64B11	SYS-1	SOUTH2	VAV2500A
O64B11	SYS-1	WEST1	VAV2000A
O64B11	SYS-1	WEST2	VAV2000A
O65B11	SYS-1	EAST1	VAV2000A

ACM VAV BOX SELECTED			
Test	**System**	**Zone**	**Model**
O65B11	SYS-1	EAST2	VAV2000A
O65B11	SYS-1	INT1	VAV900A
O65B11	SYS-1	INT2	VAV1200A
O65B11	SYS-1	NORTH1	VAV1200A
O65B11	SYS-1	NORTH2	VAV1500A
O65B11	SYS-1	SOUTH1	VAV2000A
O65B11	SYS-1	SOUTH2	VAV2500A
O65B11	SYS-1	WEST1	VAV2000A
O65B11	SYS-1	WEST2	VAV2000A
O66B12	SYS-1	EAST1	VAV2000A
O66B12	SYS-1	EAST2	VAV2000A
O66B12	SYS-1	INT1	VAV900A
O66B12	SYS-1	INT2	VAV1200A
O66B12	SYS-1	NORTH1	VAV1200A
O66B12	SYS-1	NORTH2	VAV1500A
O66B12	SYS-1	SOUTH1	VAV2000A
O66B12	SYS-1	SOUTH2	VAV2500A
O66B12	SYS-1	WEST1	VAV2000A
O66B12	SYS-1	WEST2	VAV2000A

ACM PACKAGE UNITS SELECTED		
Test	**System**	**Model**
A11B13	SYS-1	ACSP34L
A11B13	SYS-2	ACSP34L
A11B13	SYS-3	ACSP34L
A11B13	SYS-4	ACSP34L
A11B13	SYS-5	ACSP34L
A11B13	SYS-6	ACSP34L
A11B13	SYS-7	ACSP34L
A11B13	SYS-8	ACSP34L
A12B13	SYS-1	ACLP025A
A13B06	SYS-1	ACLP020A
A14B16	SYS-1	ACLP020A
A15B03	SYS-1	ACSP28L
A15B03	SYS-2	ACSP28L
A15B03	SYS-3	ACSP28L
A15B03	SYS-4	ACSP28L
A15B03	SYS-5	ACSP28L
A15B03	SYS-6	ACSP28L
A15B03	SYS-7	ACSP28L
A15B03	SYS-8	ACSP28L
A16B13	SYS-1	ACSP28L
A16B13	SYS-2	ACSP28L
A16B13	SYS-3	ACSP28L
A16B13	SYS-4	ACSP28L
A16B13	SYS-5	ACSP28L
A16B13	SYS-6	ACSP28L
A16B13	SYS-7	ACSP28L
A16B13	SYS-8	ACSP28L
A17B16	SYS-1	ACLP015A
B11B13	SYS-1	ACLP040L
B12B13	SYS-1	ACLP040L

ACM PACKAGE UNITS SELECTED		
Test	**System**	**Model**
B13B13	SYS-1	ACLP040L
B14B06	SYS-1	ACLP040H
B15B16	SYS-1	ACLP040H
B21B12	SYS-1	ACLP030A
B22B12	SYS-1	ACLP025A
B23B12	SYS-1	ACLP030A
B24B03	SYS-1	ACLP025A
B31D12	SYS-1	ACLP007A
B32D12	SYS-1	ACLP007A
C11A10	SYS-1	ACLP015A
C12A10	SYS-1	ACLP015A
C13A10	SYS-1	ACLP025A
C14A10	SYS-1	ACLP010A
C15A10	SYS-1	ACLP010A
C21B10	SYS-1	ACLP030A
C21B10	SYS-2	ACSP46A
C21B10	SYS-3	HEAT045A
C21B10	SYS-4	HEAT063A
D11D12	SYS-1	ACSP63A
D12D12	SYS-1	ACSP63A
D13D07	SYS-1	ACSP52A
D14D07	SYS-1	ACSP52A
E11D16	SYS-1	ACSP22A
E12D16	SYS-1	ACSP28A
E13D16	SYS-1	ACSP28A
E14D14	SYS-1	ACSP40A
E15D14	SYS-1	ACSP40A
E16D14	SYS-1	ACSP52A
E21B16	SYS-1	ACLP025A
E22B16	SYS-1	ACLP030A
E23B16	SYS-1	ACLP030A

ACM PACKAGE UNITS SELECTED		
Test	**System**	**Model**
E24B12	SYS-1	ACLP030H
E25B12	SYS-1	ACLP040H
E26B12	SYS-1	ACLP040H
F13B12	SYS-1	ACLP040H
F14B12	SYS-1	ACLP040H
G11A11	SYS-1	ACLP025A
G12A11	SYS-1	ACLP007A
G15B03	SYS-1	ACLP015A
G15B03	SYS-2	ACLP007A
G16B16	SYS-1	ACLP060A
G16B16	SYS-2	ACSP22A
O31A12	SYS-1	ACLP015A
O32A12	SYS-1	ACLP010H
O33A12	SYS-1	ACLP010H
O41B13	SYS-1	ACLP040L
O81A11	SYS-1	ACLP015A
O82A15	SYS-1	ACLP015A
OC1A09	SYS-1	NOHVAC
OC2A09	SYS-1	NOHVAC
OC3A09	SYS-1	ACLP015H
OC4A09	SYS-1	ACLP010A
OC4A09	SYS-2	ACLP010A

ACM WATER LOOP HEAT PUMP SELECTED			
Test	**System**	**Zone**	**Model**
O71B12	SYS-1	EAST1	WHP060A
O71B12	SYS-1	EAST2	WHP060A
O71B12	SYS-1	INT1	WHP036A
O71B12	SYS-1	INT2	WHP042A
O71B12	SYS-1	NORTH1	WHP042A
O71B12	SYS-1	NORTH2	WHP042A
O71B12	SYS-1	SOUTH1	WHP072A
O71B12	SYS-1	SOUTH2	WHP072A
O71B12	SYS-1	WEST1	WHP060A
O71B12	SYS-1	WEST2	WHP072A

ACM EVAPORATIVE COOLING EQUIPMENT SELECTED		
Test	**System**	**Model**
O91A13	SYS-1	EVAP2500AIB
O92A11	SYS-1	EVAP2500AID
O93A11	SYS-1	EVAP2500AID
O94A13	SYS-1	EVAP2500AID

FAN COIL UNITS SELECTED			
Test	**System**	**Zone**	**Model**
C22C16	SYS-3	ZONE2E	FC035A
C22C16	SYS-3	ZONE2I	FC013A
C22C16	SYS-3	ZONE2N	FC021A
C22C16	SYS-3	ZONE2S	FC056A
C22C16	SYS-3	ZONE2W	FC042A

ACM HEAT PUMP EQUIPMENT SELECTED		
Test	**System**	**Model**
F11A07	SYS-1	HPSP126H
F12A13	SYS-1	HPSP162A
G13A11	SYS-1	HPSP222H
G14A11	SYS-1	HPSP90A

ACM SYSTEM EQUIPMENT SELECTED		
Test	**System**	**Model**
C22C16	SYS-1	SYS0250A
C22C16	SYS-2	SYS0250A
O21B13	SYS-1	SYS0500A
O22B13	SYS-1	SYS0500A
O23B13	SYS-1	SYS0500A
O24B13	SYS-1	SYS0500A
O61B11	SYS-1	SYS0625A
O62B11	SYS-1	SYS0625A
O63B11	SYS-1	SYS0625A
O64B11	SYS-1	SYS0625A
O65B11	SYS-1	SYS0625A
O66B12	SYS-1	SYS0500A

ACM CENTRAL COOLING EQUIPMENT SELECTED	
Test	**Model**
C22C16	COOL0900A
C22C16	TOWER0930
O21B13	COOL0480A
O21B13	TOWER0930
O22B13	COOL0480A
O22B13	TOWER0930
O23B13	COOL0480A
O23B13	TOWER0930
O24B13	COOL0480A
O24B13	TOWER0930
O61B11	ABSOR10480A
O61B11	TOWER1250
O62B11	ABSOR20480A
O62B11	TOWER0930
O63B11	ABSORG0480A
O63B11	TOWER0930
O64B11	COOL0480A
O64B11	TOWER0930
O65B11	COOL0480A
O65B11	TOWER0930
O66B12	COOL0480A
O66B12	TOWER0930
O71B12	TOWER0220
O71B12	TOWER0930
O71B12	TOWER4300

ACM BOILER SELECTION	
Test	**Model**
A12B13	BOILER00250A
A13B06	BOILER00250A
A14B16	BOILER00250A
A17B16	BOILER00250A
B11B13	BOILER00500L
B12B13	BOILER00500L
B13B13	BOILER00500L
B14B06	BOILER00250H
B15B16	BOILER00250H
B21B12	BOILER00250A
B22B12	BOILER00250A
B23B12	BOILER00250A
B24B03	BOILER00250A
C21B10	NOBOILER
C22C16	BOILER01000A
E21B16	BOILER00250A
E22B16	BOILER00250A
E23B16	BOILER00500A
E24B12	BOILER00250H
E25B12	BOILER00250H
E26B12	BOILER00250H
F13B12	NOBOILER
F14B12	NOBOILER
G15B03	NOBOILER
G16B16	NOBOILER
O21B13	BOILER00500A
O22B13	BOILER00500A
O23B13	BOILER00500A
O24B13	BOILER00500A
O41B13	BOILER00500L

ACM BOILER SELECTION	
Test	**Model**
O61B11	BOILER01500A
O62B11	BOILER00750A
O63B11	BOILER00500A
O64B11	BOILER00500A
O65B11	BOILER00500A
O66B12	BOILER00500A
O71B12	BOILER00500A

Appendix G:

Standard Procedure for Determining the Seasonal Energy Efficiencies of Single-Zone Non-Residential Air Distribution Systems in the Space Between an Insulated Ceiling and the Roof

Appendix G:

Standard Procedure for Determining the Seasonal Energy Efficiencies of Single-Zone Non-Residential Air Distribution Systems in the Space Between an Insulated Ceiling and the Roof

Appendix G - Non-Residential Air Distribution System Efficiency

Standard Procedure for Determining the Seasonal Energy Efficiencies of Single-Zone Non-Residential Air Distribution Systems in the Space Between an Insulated Ceiling and the Roof

1.0 Introduction

This appendix describes the measurement and calculation methods for determining air distribution system efficiency for single-zone non-residential air distribution systems in the space between an insulated ceiling and the roof.

2.0 Definitions

aerosol sealant closure system: A method of sealing leaks by blowing aerosolized sealant particles into the duct system and which must include minute-by-minute documentation of the sealing process.

floor area: The floor area of enclosed conditioned space on all floors of a building, as measured at the floor level of the exterior surfaces enclosing the conditioned space.

delivery effectiveness: The ratio of the thermal energy delivered to the conditioned space and the thermal energy entering the distribution system at the equipment heat exchanger.

distribution system efficiency: The ratio of the thermal energy consumed by the equipment with the distribution system to the energy consumed if the distribution system had no losses or impact on the equipment or building loads.

equipment efficiency: The ratio between the thermal energy entering the distribution system at the equipment heat exchanger and the energy being consumed by the equipment.

equipment factor: F_{equip} is the ratio of the equipment efficiency including the effects of the distribution system to the equipment efficiency of the equipment in isolation.

fan flowmeter device: A device used to measure air flow rates under a range of test pressure differences.

***flowhood*:** A device used to capture and measure the airflow at a register.

load factor: F_{load} is the ratio of the building energy load without including distribution effects to the load including distribution system effects.

pressure pan: A device used to seal individual forced air system registers and to measure the static pressure from the register.

radiant barrier: A surface of low emissivity (less than 0.05) placed inside an attic or roof space to reduce radiant heat transfer.

recovery factor: F_{recov} is the fraction of energy lost from the distribution system that enters the conditioned space.

thermal regain: The fraction of delivery system losses that are returned to the building.

3.0 Nomenclature

a_r = duct leakage factor (1-return leakage) for return ducts
a_s = duct leakage factor (1-supply leakage)p for supply ducts
A_{floor} = conditioned floor area of building , ft^2
$A_{r,out}$ = surface area of return duct outside conditioned space ,ft^2
$A_{r,attic}$ = return duct area in attic , ft^2
$A_{r,base}$ = return duct area in basement , ft^2
$A_{r,crawl}$ = return duct area in crawlspace, ft^2
$A_{r,gar}$= return duct area inside garage, ft^2
$A_{s,out}$ = surface area of supply duct outside conditioned space,ft^2
$A_{s,attic}$ = supply duct area in attic , ft^2
$A_{s,base}$ = supply duct area in basement , ft^2
$A_{s,crawl}$ = supply duct area in crawlspace,ft^2
$A_{s,gar}$ = supply duct area inside garage, ft^2
$A_{s,in}$ = supply duct area inside conditioned space, ft^2
B_r = conduction fraction for return
B_s = conduction fraction for supply
DE = delivery effectiveness
DE_{design} = design delivery effectiveness
$DE_{seasonal}$ = seasonal delivery effectiveness
E_{equip} = rate of energy exchanged between equipment and delivery system, Btu/hour
$F_{cycloss}$ = cyclic loss factor
F_{equip} = load factor for equipment
F_{flow} = load factor for fan flow effect on equipment efficiency
F_{leak} = fraction of system fan flow that leaks out of supply or return ducts
F_{load} = load factor for delivery system
F_{recov} = thermal loss recovery factor
F_{regain} = thermal regain factor
K_r = return duct surface area coefficient
K_s = supply duct surface area coefficient
N_{story} = number of stories of the building
P_{sp} = pressure difference between supply plenum and conditioned space [Pa]
P_{test} = test pressure for duct leakage [Pa]
Q_e = Flow through air handler fan at operating conditions, cfm
$Q_{total,25}$ = total duct leakage at 25 Pascal, cfm
R_r = thermal resistance of return duct, h ft^2 F/Btu
R_s = thermal resistance of supply duct, h ft^2 F/Btu
$T_{amb,r}$ = ambient temperature for return , F
$T_{amb,s}$ = ambient temperature for supply , F
T_{attic} = attic air temperature , F
T_{base} - return duct temperature in basement, F
T_{crawl} - return duct temperature in crawlspace,F
T_{design} = outdoor air design temperature , F
T_{ground} = ground temperature , F
T_{gar} = temperature of garage air , F
T_{in} = temperature of indoor air , F
T_{rp} = return plenum air temperature , F
$T_{seasonal}$ = outdoor air seasonal temperature, F
T_{sp} = supply plenum air temperature , F
ΔT_e = temperature rise across heat exchanger , F
ΔT_r = temperature difference between indoors and the ambient for the return , F
ΔT_s = temperature difference between indoors and the ambient for the supply,
$\eta_{dist,seasonal}$ = seasonal distribution system efficiency

4.0 Air Distribution Diagnostic Measurement and Default Assumptions

4.1 Instrumentation Specifications

The instrumentation for the air distribution diagnostic measurements shall conform to the following specifications:

4.1.1 Pressure Measurements

All pressure measurements shall be measured with measurement systems (i.e. sensor plus data acquisition system) having an accuracy of ± 0.2 Pa. All pressure measurements within the duct system shall be made with static pressure probes.

4.1.2 Fan Flow Measurements

All measurements of distribution fan flows shall be made with measurement systems (i.e. sensor plus data acquisition system) having an accuracy of ±5% reading or ±5 cfm whichever is greater.

4.1.3 Duct Leakage Measurements

The measurement of air flows during duct leakage testing shall have an accuracy of ±3% of measured flow using digital gauges.

All instrumentation used for fan flow and duct leakage diagnostic measurements shall be calibrated according to the manufacturer's calibration procedure to conform to the above accuracy requirement. All testers performing diagnostic tests shall obtain evidence from the manufacturer that the equipment meets the accuracy specifications. The evidence shall include equipment model, serial number, the name and signature of the person of the test laboratory verifying the accuracy, and the instrument accuracy. All diagnostic testing equipment is subject to re-calibration when the period of the manufacturer's guaranteed accuracy expires.

4.2 Apparatus

4.2.1 Duct Leakage

The apparatus for fan pressurization duct leakage measurements shall consist of a duct pressurization and flow measurement device meeting the specifications in Section 4.1.3.

4.3 Procedure

The following sections identify input values for building and HVAC system (including ducts) using either default or diagnostic information.

4.3.1 Building Information

The calculation procedure for determining air distribution efficiencies requires the following building information:

1. climate zone for the building,
2. conditioned floor area, and
3. number of stories,

4.3.1.1 Default Input

Using default values rather than diagnostic procedures produce relatively low air distribution-system efficiencies. Default values shall be obtained from following sections:

1. the location of the duct system in Section 4.3.4,
2. the surface area and insulation level of the ducts in Sections 4.3.3, 4.3.4 and 4.3.6,
3. the system fan flow in Section 4.3.7, and
4. the leakage of the duct system in Section 4.3.8.

4.3.2 Diagnostic Input

Diagnostic inputs are used for the calculation of improved duct efficiency. The diagnostics include observation of various duct characteristics and measurement of duct leakage and system fan flows as described in Sections 4.3.5 through 4.3.8. These observations and measurements replace those assumed as default values.

The diagnostic procedures include

- measure total duct system leakage as described in Section 4.3.8.
- Observe the insulation level for the supply (R_s) and return (R_r) ducts outside the conditioned space as described in Section 4.3.6.

4.3.3 Duct Surface Area

The supply-side and return-side duct surface areas shall be calculated separately. If the supply or return duct is located in more than one zone, the area of that duct in each zone shall be calculated separately. The duct surface area shall be determined using the following methods.

4.3.3.1 Duct Surface Area

The duct surface area for supply and return shall be calculated as follows:

For supplies:

$$A_{s,total} = K_s A_{floor} \quad (4.1)$$

Where K_s (supply duct surface area coefficient) shall be 1 for one story buildings, 0.5 for two story buildings, and 0.33 for three-story buildings.

For returns:

$$A_{r,total} = K_r A_{floor} \quad (4.2)$$

Where K_r (return duct surface area coefficient) shall be 0.05 for one story building and 0.1 for two or more stories.

4.3.4 Duct Location

Ducts shall be considered to be ~~in buffer spaces~~installed in spaces between ceilings and roofs or building exteriors if more than 50 lineal feet of duct or 75 percent of the duct surface area is located~~they are~~ in a space between an insulated ceiling and the roof, and that space is either a) vented to the outdoors, and/or b) insulated from the indoors.

4.3.5 Climate and Duct Ambient Conditions for Ducts in the Space Between an Insulated Ceiling and the Roof

Duct ambient temperature for both heating and cooling shall be obtained from Table 4.1. Indoor dry-bulb (T_{in}) temperature for cooling is 78°F. The indoor dry-bulb temperature for heating is 70°F.

Table 4.1 Default Assumptions for Duct Ceiling/Roof Space Ambient Temperature		
Climate zone	Duct Ambient Temperature for Heating, $T_{heat,amb}$	Duct Ambient Temperature for Cooling, $T_{cool,amb}$
1	52.0	60.0
2	48.0	87.0
3	55.0	80.0
4	53.0	79.0
5	49.0	74.0
6	57.0	81.0
7	62.0	74.0
8	58.0	80.0
9	53.0	87.0
10	53.0	91.0
11	48.0	95.0
12	50.0	91.0
13	48.0	92.0
14	39.0	99.0
15	50.0	102.
16	32.0	80.0

4.3.6 Duct Wall Thermal Resistance

4.3.6.1 Default Duct Insulation R value

Default duct wall thermal resistance is R4.2. An air film resistance of 0.7 [h ft^2 ^oF/BTU] shall be added to the duct insulation R value to account for external and internal film resistance.

4.3.6.2 Diagnostic Duct Wall Thermal Resistance

Duct wall thermal resistance shall be determined from the manufacturer's specification observed during diagnostic inspection. If ducts with multiple R values are installed, the lowest duct R value shall be used. If a duct with a higher R value than 4.2 is installed, the R-value shall be clearly stated on the building plan and a visual inspection of the ducts must be performed to verify the insulation values. In case the space on top of the duct boot is limited and can not be inspected, the insulation R value within two feet of the boot to which the duct is connected may be excluded from the determination of the overall system R value.

4.3.7 System Fan Flow

4.3.7.1 Default Fan Flow

The default cooling fan flow with an air conditioner and for heating with a heat pump for **all climate zones** shall be calculated as follows:

$$Q_e = 1.25\ A_{floor} \quad (4.3)$$

4.3.8 Duct Leakage

4.3.8.1 Duct Leakage Factor for Delivery Effectiveness Calculations

Default duct leakage factors shall be obtained from Table 4.2, using the "not Tested" values.
Duct leakage factors shown in Table 4.2 shall be used in calculations of delivery effectiveness.

Table 4.2 Duct Leakage Factors		
	Duct Leakage Diagnostic Test Performed using Section 4.3.8.2 Procedures	$a_s = a_r =$
Duct systems in buildings built prior to 2001	Not tested	0.86
Duct systems in buildings built after 2001	Not tested	0.89
Duct systems in buildings of all ages, System tested after HVAC system completion	(Q_{25}) Total leakage is less than 0.06 Q_e	0.96

4.3.8.2 Diagnostic Duct Leakage

Diagnostic duct leakage measurement is used to quantify total leakage for the calculation of air distribution efficiency. To obtain the improved duct efficiency for sealing the duct system, a diagnostic leakage test as described in section 4.3.8.2.1 or 4.3.8.2.2 must be performed.

4.3.8.2.1 Diagnostic Duct Leakage from Fan Pressurization of Ducts

The total duct leakage shall be determined by pressurizing the ducts to 25 Pascals with all ceiling diffusers/grilles and HVAC equipment installed. The following procedure shall be used for the fan pressurization tests:

1. Seal all the supply and return registers, except for one return register or the system fan access.
2. Attach the fan flowmeter device to the duct system at the unsealed register or access door.
3. Install a static pressure probe at a supply.
4. Adjust the fan flowmeter to produce a 25 Pascal (0.1 in water) pressure difference between the supply duct and the outside or the building space with the entry door open to the outside.
5. Record the flow through the flowmeter ($Q_{total,25}$) - this is the total duct leakage flow at 25 Pascals.

When the diagnostic leakage test is performed and the measured total duct leakage is less than 6% of the total fan flow, the duct leakage factor shall be 0.96 as shown in Table 4.2.

4.3.8.2.2 Diagnostic Duct Leakage Using An Aerosol Sealant Closure System

Same procedure as for other closure systems

4.4 Delivery Effectiveness (DE) Calculations

Seasonal delivery effectiveness shall be calculated using the seasonal design temperatures from Table 4.1.

4.4.1 Calculation of Duct Zone Temperatures

The temperatures of the duct zones outside the conditioned space are determined in Section 4.3.5 for seasonal conditions for both heating and cooling.

For heating:

$$Tamb,s = Tamb,r = Tamb,heat \quad (4.4)$$

For cooling:

$$Tamb,s = Tamb,r = Tamb,cool \quad (4.5)$$

WhereTamb,heat and Tamb,cool are determined from values in Table 4.1.

4.4.2 Seasonal Delivery Effectiveness (DE)

The supply and return conduction fractions, B_s and B_r, shall be calculated as follows:

$$B_s = \exp\left(\frac{-A_{s,out}}{1.08\,Q_e\,R_s}\right) \quad (4.6)$$

$$B_r = \exp\left(\frac{-A_{r,out}}{1.08\,Q_e\,R_r}\right) \quad (4.7)$$

The temperature difference across the heat exchanger in the following equation is used:
for heating:

$$\Delta T_e = 55 \quad (4.8)$$

for cooling:

$$\Delta T_e = -20 \quad (4.9)$$

The temperature difference between the building conditioned space and the ambient temperature surrounding the supply, ΔT_s, and return, ΔT_r, shall be calculated using the indoor and the duct ambient temperatures.

$$\Delta T_s = T_{in} - T_{amb,s} \quad (4.10)$$

$$\Delta T_r = T_{in} - T_{amb,r} \quad (4.11)$$

The seasonal delivery effectiveness for heating or cooling systems shall be calculated using:

$$DE_{seasonal} = a_s B_s - a_s B_s (1 - B_r a_r)\frac{\Delta T_r}{\Delta T_e} - a_s(1 - B_s)\frac{\Delta T_s}{\Delta T_e} \quad (4.12)$$

4.5 Seasonal Distribution System Efficiency

Seasonal distribution system efficiency shall be calculated using delivery effectiveness, equipment, load, and recovery factors calculated for seasonal conditions.

4.5.1 Equipment Efficiency Factor (F_{equip})

F_{equip} is 1.

4.5.2 Thermal Regain (F_{regain})

The reduction in building load due to regain of duct losses shall be calculated using the thermal regain factor. The default thermal regain factors are provided in Table 4.3.

Table 4.3 Thermal Regain Factors	
Supply Duct Location	**Thermal Regain Factor [F_{regain}]**
Ceiling/Roof Space	0.10

4.5.3 Recovery Factor (F_{recov})

The recovery factor, F_{recov}, is calculated based on the thermal regain factor, F_{regain}, and the duct losses without return leakage.

$$F_{recov} = 1 + F_{regain}\left(\frac{1 - a_s B_s + a_s B_s (1 - B_r)\frac{\Delta T_r}{\Delta T_e} + a_s (1 - B_s)\frac{\Delta T_s}{\Delta T_e}}{DE_{seasonal}}\right) \qquad (4.13)$$

4.5.4 Seasonal Distribution System Efficiency

The seasonal distribution system efficiency shall be calculated using the seasonal delivery effectiveness from section 4.4.2, the equipment efficiency factor from section 4.5.1, and the recovery factor from section 4.5.3. Note that $DE_{seasonal}$, F_{equip}, F_{recov} must be calculated separately for cooling and heating conditions. Distribution system efficiency shall be determined using the following equation:

$$\eta_{dist,seasonal} = 0.98\, DE_{seasonal}\, F_{equip}\, F_{recov} \qquad (4.14)$$

Where 0.98 accounts for the energy losses from heating and cooling the duct thermal mass.

Appendix H:

Test Non-Residential Air Distribution Systems

Appendix H: Test Non-Residential Air Distribution Systems

Appendix H – Seasonal Energy Efficiencies of Single-Zone Non-Residential Air Distribution Systems in the Space Between an Insulated Ceiling and the Roof in California Climate Zones

CASE CODE	Input Assumptions for Non-Residential Duct Systems: Total duct Leakage, %	Supply duct R Value	Return duct R value
1001	22	4.2	4.2
1002	22	8	8
1003	8	4.2	4.2
1004	8	8	8

CASE CODE	Climate Zone 1				Climate Zone 2			
	1 Story		2 Story		1 Story		2 Story	
	Heating,%	Cooling,%	Heating,%	Cooling,%	Heating,%	Cooling,%	Heating,%	Cooling,%
1001	0.750	0.810	0.779	0.812	0.737	0.674	0.767	0.702
1002	0.793	0.813	0.810	0.814	0.783	0.717	0.800	0.734
1003	0.820	0.866	0.852	0.869	0.811	0.744	0.843	0.775
1004	0.868	0.869	0.886	0.871	0.861	0.792	0.880	0.810
	Climate Zone 3				Climate Zone 4			
	1 Story		2 Story		1 Story		2 Story	
	Heating,%	Cooling,%	Heating,%	Cooling,%	Heating,%	Cooling,%	Heating,%	Cooling,%
1001	0.759	0.730	0.788	0.755	0.753	0.738	0.782	0.763
1002	0.801	0.763	0.817	0.778	0.795	0.770	0.812	0.784
1003	0.827	0.786	0.858	0.813	0.822	0.792	0.854	0.818
1004	0.873	0.822	0.891	0.837	0.869	0.826	0.888	0.841
	Climate Zone 5				Climate Zone 6			
CODE	1 Story		2 Story		1 Story		2 Story	
	Heating,%	Cooling,%	Heating,%	Cooling,%	Heating,%	Cooling,%	Heating,%	Cooling,%
1001	0.740	0.760	0.770	0.779	0.766	0.722	0.794	0.747
1002	0.785	0.784	0.803	0.795	0.806	0.757	0.822	0.771
1003	0.813	0.813	0.845	0.834	0.832	0.780	0.863	0.807
1004	0.863	0.839	0.882	0.851	0.876	0.818	0.894	0.834
	Climate Zone 7				Climate Zone 8			
	1 Story	2 Story	1 Story	2 Story				
	Heating,%	Cooling,%	Heating,%	Cooling,%	Heating,%	Cooling,%	Heating,%	Cooling,%
1001	0.781	0.760	0.809	0.779	0.769	0.752	0.797	0.770
1002	0.819	0.784	0.835	0.795	0.808	0.776	0.825	0.786
1003	0.844	0.813	0.873	0.834	0.834	0.809	0.865	0.829
1004	0.884	0.839	0.901	0.851	0.878	0.835	0.895	0.847
	Climate Zone 9				Climate Zone 10			
	1 Story		2 Story		1 Story		2 Story	
	Heating,%	Cooling,%	Heating,%	Cooling,%	Heating,%	Cooling,%	Heating,%	Cooling,%
1001	0.753	0.702	0.782	0.723	0.753	0.674	0.782	0.696
1002	0.795	0.734	0.812	0.746	0.795	0.710	0.812	0.723
1003	0.822	0.775	0.854	0.798	0.822	0.756	0.854	0.780
1004	0.869	0.811	0.888	0.824	0.869	0.797	0.888	0.811

CASE CODE	Climate Zone 11				Climate Zone 12			
	1 Story		2 Story		1 Story		2 Story	
	Heating,%	Cooling,%	Heating,%	Cooling,%	Heating,%	Cooling,%	Heating,%	Cooling,%
1001	0.737	0.645	0.767	0.669	0.743	0.674	0.773	0.696
1002	0.783	0.686	0.800	0.700	0.788	0.710	0.805	0.723
1003	0.811	0.737	0.843	0.762	0.815	0.756	0.848	0.780
1004	0.861	0.783	0.880	0.798	0.864	0.797	0.883	0.811
	Climate Zone 13				Climate Zone 14			
	1 Story		2 Story		1 Story		2 Story	
	Heating,%	Cooling,%	Heating,%	Cooling,%	Heating,%	Cooling,%	Heating,%	Cooling,%
1001	0.737	0.667	0.767	0.689	0.709	0.617	0.740	0.642
1002	0.783	0.704	0.800	0.717	0.759	0.663	0.778	0.677
1003	0.811	0.751	0.843	0.776	0.789	0.717	0.824	0.745
1004	0.861	0.793	0.880	0.807	0.846	0.768	0.866	0.784
	Climate Zone 15				Climate Zone 16			
	1 Story		2 Story		1 Story		2 Story	
	Heating,%	Cooling,%	Heating,%	Cooling,%	Heating,%	Cooling,%	Heating,%	Cooling,%
1001	0.743	0.596	0.773	0.622	0.686	0.730	0.719	0.755
1002	0.788	0.645	0.805	0.660	0.742	0.763	0.761	0.778
1003	0.815	0.703	0.848	0.731	0.773	0.786	0.809	0.813
1004	0.864	0.758	0.883	0.775	0.835	0.822	0.856	0.837

Appendix I:

Default Fenestration Thermal Properties

Appendix I: Default Fenestration Thermal Properties

Appendix I – Default Fenestration Thermal Properties

Solar Heat Gain Coefficient

Determination of Solar Heat Gain Coefficients for Fenestration without Certified NFRC Values

This section describes the calculation method, eligibility criteria, and documentation requirements for determining the SHGC of fenestration for which there is no certified NFRC value.

Site-Assembled Fenestration Products and Field-fabricated Fenestration

This section describes the alternative calculation method for determining compliance for site-assembled and field-fabricated products similar to site-built products.

Site-assembled fenestration includes both field-fabricated fenestration and fenestration whose frame is previously cut or formed by a manufacturer with the specific intention of being used with a glazing assembly to create a complete fenestration product.

Field-fabricated fenestration is a fenestration product whose frame is made at the construction site of standard dimensional lumber or other materials that were not previously cut or otherwise formed with the specific intention of being used to fabricate a fenestration product.

For site-assembled and field-fabricated fenestration, use the following equation to calculate the SHGC for fenestration that is used to determine compliance. Convert the center of glass SHGC, $SHGC_c$, from the manufacturer's documentation to a value for the fenestration product with framing, $SHGC_{fen}$,

$$\mathbf{SHGC_{fen} = 0.08 + 0.86 \times SHGC_c}$$

Where:

$SHGC_c$ is the SHGC for the center of glass alone, and

$SHGC_{fen}$ is the SHGC for the fenestration including glass and frame.

Manufactured Fenestration Products

This section describes the alternative calculation method for determining compliance for manufactured products that do not have SHGC values published by the National Fenestration Rating Council (NFRC) in the *NFRC Certified Products Directory*.

Manufactured Fenestration Products without a SHGC certified to the NFRC are similar to those that have an SHGC certified to NFRC. They are complete products, shipped from the manufacturer with the frame and glazing already assembled. These products may be listed in the directory with their U-factors, but without an SHGC. As of January 1, 2001, the number of these products is very small and includes only those with non-planar or translucent glazing. To determine compliance with the building efficiency standards, the center of glass SHGC from the manufacturer's documentation must be converted to an SHGC that includes the framing effect. Use the following equation:

$$\mathbf{SHGC_{fen} = 0.11 + 0.81 \times SHGC_c}$$

Where:

$SHGC_c$ is the SHGC for the center of glass alone, and

$SHGC_{fen}$ is the SHGC for the fenestration including glass and frame.

Responsibilities for Compliance

This section describes the responsibilities of energy consultants, designers, architects, builders, installers, and building departments when this alternative calculation method is used for determining compliance with SHGC requirements.

Energy Consultants, Designers, Architects

Products with SHGCs Certified to NFRC

SHGCs can be found in the NFRC *Certified Products Directory*, SV section. Contact NFRC at 301-589-6372 for a copy of the directory or go to NFRC's website at www.nfrc.org for an online database of the directory.

Field-Fabricated Fenestration, Site-Assembled Fenestration and Fenestration Products without SHGC Certified to NFRC

The procedure described below does not apply to site-assembled vertical glazing in buildings with (a) 100,000 sf or more of conditioned floor area and (b) 10,000 sf or more of vertical fenestration area. For these glazing assemblies, use the NFRC 100SB Label Certificate procedure described above. (For projects where the building has 100,000 sf or more of conditioned space and there is 10,000 sf or more of fenestration area, the SHGC of the vertical glazing must be obtained using NFRC 100SB and must be verified by a Label Certificate for Site-Built Products. The Label Certificate must be included with the plans or be provided on site at the time of inspection.)

To determine compliance with the efficiency standards, the center of glass SHGC from the manufacturer's documentation for the proposed glazing must be converted to an $SHGC_{fen}$ for the fenestration that includes the framing effect. For the Prescriptive compliance method, the $SHGC_{fen}$ is then entered into the prescriptive ENV-1 form, Part 2 of 2 and must appear on the plans.

For the Performance compliance method, the $SHGC_{fen}$ output information printed on the Performance ENV-1 form must be listed on the building plans. The PERF-1 and Performance ENV-1 forms must appear on the plans. The building plan window schedule list must indicate the proposed total $SHGC_{fen}$ values for each fenestration assembly, and these values must be equal to the SHGCs listed on the Performance ENV-1 computer form. (Note: an under-calculation of space conditioning energy can result from entering either too low or too high an $SHGC_{fen}$ for the product.) The proposed design $SHGC_{fen}$ values are entered into the computer program to automatically generate the energy budget of the standard design and the energy use of the proposed design. The building complies if the total energy use of the proposed design is the same or less than the standard design energy budget.

Permit applications must include heat gain documentation for the Building Plan Checker. This documentation must include a copy of the manufacturer's documentation showing the $SHGC_c$, center of glass alone and the calculation used to determine the $SHGC_{fen}$. If the proposed design uses multiple fenestration products or site-assembled fenestration products, a calculation for each different $SHGC_{fen}$ must be attached to the plans along with each glass unit manufacturer's documentation.

Mixed Fenestration Types

If mixed fenestration is included in the compliance analysis, then the compliance submittal must demonstrate which are certified fenestration products and which are non-certified fenestration or site-assembled fenestration products. The manufacturer's documentation and calculations for each product must be included in the submittal, and either the ENV-1 or PERF-1 form must be included on the building plans.

Builder and Installer Responsibilities

The builder is responsible for assuring that the glass documentation showing the SHGC used for determining compliance is provided to the installer. The builder is responsible for obtaining an NFRC Label Certificate for Site-Built Products for the building's vertical glazing if the building is 100,000 sf or more and has 10,000 sf or more of vertical glazing.

The builder is also responsible for assuring that the persons preparing compliance documentation are specifying products that the builder intends to install. The builder must assure that the glazing contractor installs the glass with the same $SHGC_c$ as used for compliance and that the building inspector is provided with manufacturers' documentation showing the $SHGC_c$ for the actual glass product installed. The builder should verify that these fenestration products are clearly shown on the building plans before fenestration products are purchased and installed.

Building Department Responsibilities - Plan Checker

The building department plan checker is responsible for assuring that the plans identify which fenestration is site-assembled and which is not. The plan-checker is responsible for verifying that the $SHGC_{fen}$ and $SHGC_c$ for non-certified fenestration products or site-assembled products is identified on the plans, that calculations have been provided showing the conversion from $SHGC_c$ to $SHGC_{fen}$, and that manufacturer documentation of the $SHGC_c$ has been provided for the fenestration to be installed. Plans should be consistent with the compliance documentation, the calculations showing the conversion from $SHGC_c$ to $SHGC_{fen}$, and Prescriptive ENV-1 Part 2 of 2 or Performance ENV-1.

Building Inspector

The building department field inspector is responsible for assuring that manufacturer's documentation has been provided for the installed fenestration. The inspector is responsible for checking the NFRC label for manufactured fenestration products, or the NFRC 100SB Label Certificate for site-built products where appropriate as described below [see "Energy Consultants, Designers, Architects: Products with SHGCs Certified to NFRC" above].

(a.) All manufactured fenestration products must have either an NFRC label or manufacturer's label with default SHGCs from Table 1-E.

(b.) All site assembled fenestration products in buildings 100,000 sf of conditioned floor area or more and 10,000 sf of vertical fenestration area or more must have either an NFRC Label Certificate for Site-Built Fenestration Products or a manufacturer's certificate with a default SHGC from Table 1-E.

(c.) Site assembled vertical fenestration products in buildings less than 100,000 sf, or buildings with less than 10,000 sf of vertical glazing, may use either of the rating/labeling methods described in (b) above, or the $SHGC_{fen}$ calculation method described in this section.

(d.) Horizontal glazing that does not have a certified NFRC SHGC may use any of the above methods for determining and labeling or certifying the SHGC.

The field inspector is responsible for assuring that the certified SHGC, or $SHGC_c$ and $SHGC_{fen}$, for the installed fenestration is consistent with the plans, the Prescriptive ENV-1 Part 2 of 2 or the Performance PERF-1 and Performance ENV-1, and that manufacturer documentation is consistent with the product installed in the building. Plans shall indicate which fenestration is site-assembled or is a fenestration product without SHGCs certified to the NFRC.

Thermal Transmittance (U-Factor)

Table I-1 provides default U-factors for skylights and site-built fenestration in buildings covered by the Nonresidential Energy Standards. The default table may be used only for the following:

- Site-assembled and field-fabricated glazed wall systems in buildings covered by the Nonresidential Energy Standards that have less than 100,000 square feet of conditioned floor area or less than 10,000 square feet of vertical glazing.

- Skylights in buildings covered by the Nonresidential Energy Standards.

The default Table I-1 is consistent with default U-factors published in Table 5, Chapter 29, ASHRAE Fundamentals Handbook, 1997, which is referenced in the Energy Standards. Fenestration products fitting the two descriptions above may still use U-factors obtained through NFRC if available

Responsibilities for Compliance

This section describes the responsibilities of energy consultants, designers, architects, builders, installers, and building departments when Table I-1 is used for determining compliance with the U-factor requirements of the Efficiency Standards.

Energy Consultants, Designers, Architects

Products with U-factor Certified to NFRC

U-factor values can be found in the NFRC *Certified Products Directory.* Contact NFRC at 301-589-6372 for a copy of the directory or go to NFRC's website at www.nfrc.org for an online database of the directory.

Field-Fabricated Fenestration, Site-Assembled Fenestration and Fenestration Products without U-factor Certified to NFRC

To determine compliance with the efficiency standards, the Glazing Type and Frame Type shown in Table I-1 must be identified from the manufacturer's documentation for the proposed glazing. For the Prescriptive compliance method, the U-factor must be selected from Table I-1 for this Glazing Type and Frame Type and entered into the prescriptive ENV-1 form, Part 2 of 2, and must appear on the plans.

For the Performance compliance method, the U-factor output information printed on the Performance ENV-1 form must be listed on the building plans. The

PERF-1 and Performance ENV-1 forms must appear on the plans. The building plan window schedule list must indicate the proposed total U-factors for each fenestration assembly, and these values must be equal to or less than the U-factors listed on the Performance ENV-1 computer form. The proposed design U-factors are entered into the computer program to automatically generate the energy use of the proposed design. The building complies if the total energy use of the proposed design is the same or less than the standard design energy budget.

Permit applications must include fenestration U-factor documentation for the Building Plan Checker. This documentation must include a copy of the manufacturer's documentation showing the Glazing Type information – number of panes, spacing of panes, glass type, gas fill type, coating emissivity and location – and the Frame Type – frame material type, presence of thermal breaks, and identification of structural glazing (glazing with no frame) that is used to determine the U-factor. If the proposed design uses multiple fenestration products or site-assembled fenestration products, manufacturer's documentation for each different U-factor must be attached to the plans for each glass unit. Manufacturer's documentation must be provided for each U-factor used for compliance.

Mixed Fenestration Types

If mixed fenestration is included in the compliance analysis, then the compliance submittal must demonstrate which are certified fenestration products and which are non-certified fenestration or site-assembled fenestration products. The manufacturer's documentation and calculations for each product must be included in the submittal, and either the ENV-1 or PERF-1 form must be included on the building plans.

Builder and Installer Responsibilities

The builder is responsible for assuring that the glass documentation showing the U-factor used for determining compliance is provided to the installer. The builder is responsible for assuring that the persons preparing compliance documentation are specifying products that the builder intends to install. The builder is also responsible for assuring that the installer installs glass with the same U-factor as used for compliance and assuring that the field inspector for the building department is provided with manufacturer's documentation showing the U-factor and method of determining U-factor for the actual fenestration product installed. The builder should verify that these fenestration products are clearly shown on the building plans before fenestration products are purchased and installed.

Building Department Responsibilities

Plan Checker

The building department plan checker is responsible for assuring that the plans identify which fenestration is site-assembled and which is not. The plan-checker is responsible for verifying that the U-factor for non-certified fenestration products or site-assembled products is identified on the plans, that Glazing Type and Frame Type and Table 1-I have been provided showing the method of determining the U-factor, and that manufacturer documentation of the U-factor has been provided for the fenestration to be installed. Plans should be consistent with the compliance documentation, the Glazing Type and Frame Type and Table I-1 values, and Prescriptive ENV-1 Part 2 of 2 or Performance ENV-1.

Building Inspector

The building department field inspector is responsible for assuring that manufacturer's documentation has been provided for the installed fenestration. The field inspector is responsible for assuring that the U-factor for the installed fenestration is consistent with the plans, the Prescriptive ENV-1 Part 2 of 2 or the Performance PERF-1, and Performance ENV-1, and that manufacturer documentation is consistent with the product installed in the building.

Plans shall indicate which fenestration is site-assembled or is a fenestration product without U-factor certified to NFRC.

Table I-1 – Assembly U-Factors for Unlabeled Glazed Wall Systems (Site-Built Windows) and Unlabeled Skylights

Product Type		**Vertical Installation**				**Sloped Installation**						
		Unlabeled Glazed Wall Systems (Site Built Windows) (includes site assembled fixed windows only, does not include operable windows)				**Unlabeled Skylight with Curb** (includes glass/plastic, flat/domed, fixed/operable)				**Unlabeled Skylight without Curb** (includes glass/plastic, flat/domed, fixed/operable)		
Frame Type		Aluminum without Thermal Break	Aluminum with Thermal Break	Wood/Vinyl	Structural Glazing	Aluminum without Thermal Break	Aluminum with Thermal Break	Reinforced Vinyl/ Aluminum Clad Wood	Wood/Vinyl	Aluminum without Thermal Break	Aluminum with Thermal Break	Structural Glazing
ID	**Glazing Type**											
	Single Glazing											
1	1/8" glass	1.22	1.11	0.98	1.11	1.98	1.89	1.75	1.47	1.36	1.25	1.25
2	1/4" acrylic/polycarb	1.08	0.96	0.84	0.96	1.82	1.73	1.60	1.31	1.21	1.10	1.10
3	1/8" acrylic/polycarb	1.15	1.04	0.91	1.04	1.90	1.81	1.68	1.39	1.29	1.18	1.18
	Double Glazing											
4	1/4" airspace	0.79	0.68	0.56	0.63	1.31	1.11	1.05	0.84	0.82	0.70	0.66
5	1/2" airspace	0.73	0.62	0.50	0.57	1.30	1.10	1.04	0.84	0.81	0.69	0.65
6	1/4" argon space	0.75	0.64	0.52	0.60	1.27	1.07	1.00	0.80	0.77	0.66	0.62
7	1/2" argon space	0.70	0.59	0.48	0.55	1.27	1.07	1.00	0.80	0.77	0.66	0.62
	Double Glazing, *e*=0.60 on surface 2 or 3											
8	1/4" airspace	0.76	0.65	0.53	0.61	1.27	1.08	1.01	0.81	0.78	0.67	0.63
9	1/2" airspace	0.69	0.58	0.47	0.54	1.27	1.07	1.00	0.80	0.77	0.66	0.62
10	1/4" argon space	0.72	0.61	0.49	0.56	1.23	1.03	0.97	0.76	0.74	0.63	0.58
11	1/2" argon space	0.67	0.56	0.44	0.51	1.23	1.03	0.97	0.76	0.74	0.63	0.58
	Double Glazing, *e*=0.40 on surface 2 or 3											
12	1/4" airspace	0.74	0.63	0.51	0.58	1.25	1.05	0.99	0.78	0.76	0.64	0.60
13	1/2" airspace	0.66	0.55	0.44	0.51	1.24	1.04	0.98	0.77	0.75	0.64	0.59
14	1/4" argon space	0.69	0.57	0.46	0.53	1.18	0.99	0.92	0.72	0.70	0.58	0.54
15	1/2" argon space	0.63	0.51	0.40	0.47	1.20	1.00	0.94	0.74	0.71	0.60	0.56
	Double Glazing, *e*=0.20 on surface 2 or 3											
16	1/4" airspace	0.70	0.59	0.48	0.55	1.20	1.00	0.94	0.74	0.71	0.60	0.56
17	1/2" airspace	0.62	0.51	0.39	0.46	1.20	1.00	0.94	0.74	0.71	0.60	0.56
18	1/4" argon space	0.64	0.53	0.42	0.49	1.14	0.94	0.88	0.68	0.65	0.54	0.50
19	1/2" argon space	0.57	0.46	0.35	0.42	1.15	0.95	0.89	0.68	0.66	0.55	0.51
	Double Glazing, *e*=0.10 on surface 2 or 3											
20	1/4" airspace	0.68	0.57	0.45	0.52	1.18	0.99	0.92	0.72	0.70	0.58	0.54
21	1/2" airspace	0.59	0.48	0.37	0.44	1.18	0.99	0.92	0.72	0.70	0.58	0.54
22	1/4" argon space	0.62	0.51	0.39	0.46	1.11	0.91	0.85	0.65	0.63	0.52	0.47
23	1/2" argon space	0.55	0.44	0.33	0.39	1.13	0.93	0.87	0.67	0.65	0.53	0.49

	Product Type	Vertical Installation				Sloped Installation						
		Unlabeled Glazed Wall Systems (Site Built Windows) (includes site assembled fixed windows only, does not include operable windows)				Unlabeled Skylight with Curb (includes glass/plastic, flat/domed, fixed/operable)				Unlabeled Skylight without Curb (includes glass/plastic, flat/domed, fixed/operable)		
	Frame Type	Aluminum without Thermal Break	Aluminum with Thermal Break	Wood/Vinyl	Structural Glazing	Aluminum without Thermal Break	Aluminum with Thermal Break	Reinforced Vinyl/ Aluminum Clad Wood	Wood/Vinyl	Aluminum without Thermal Break	Aluminum with Thermal Break	Structural Glazing
	Double Glazing, *e*=0.05 on surface 2 or 3											
24	1/4" airspace	0.67	0.56	0.44	0.51	1.17	0.97	0.91	0.70	0.68	0.57	0.52
25	1/2" airspace	0.57	0.46	0.35	0.42	1.17	0.98	0.91	0.71	0.69	0.58	0.53
26	1/4" argon space	0.60	0.49	0.38	0.44	1.09	0.89	0.83	0.63	0.61	0.50	0.45
27	1/2" argon space	0.53	0.42	0.31	0.38	1.11	0.91	0.85	0.65	0.63	0.52	0.47
	Triple Glazing											
28	1/4" airspaces	0.63	0.52	0.41	0.47	1.12	0.89	0.84	0.64	0.64	0.53	0.48
29	1/2" airspaces	0.57	0.46	0.35	0.41	1.10	0.87	0.81	0.61	0.62	0.51	0.45
30	1/4" argon spaces	0.60	0.49	0.38	0.43	1.09	0.86	0.80	0.60	0.61	0.50	0.44
31	1/2" argon spaces	0.55	0.45	0.34	0.39	1.07	0.84	0.79	0.59	0.59	0.48	0.42
	Triple Glazing, *e*=0.20 on surface 2,3,4, or 5											
32	1/4" airspaces	0.59	0.48	0.37	0.42	1.08	0.85	0.79	0.59	0.60	0.49	0.43
33	1/2" airspaces	0.52	0.41	0.30	0.35	1.05	0.82	0.77	0.57	0.57	0.46	0.41
34	1/4" argon spaces	0.54	0.44	0.33	0.38	1.02	0.79	0.74	0.54	0.55	0.44	0.38
35	1/2" argon spaces	0.49	0.38	0.28	0.33	1.01	0.78	0.73	0.53	0.54	0.43	0.37
	Triple Glazing, *e*=0.20 on surfaces 2 or 3 and 4 or 5											
36	1/4" airspaces	0.55	0.45	0.34	0.39	1.03	0.80	0.75	0.55	0.56	0.45	0.39
37	1/2" airspaces	0.48	0.37	0.26	0.31	1.01	0.78	0.73	0.53	0.54	0.43	0.37
38	1/4" argon spaces	0.50	0.39	0.29	0.34	0.99	0.75	0.70	0.50	0.51	0.40	0.35
39	1/2" argon spaces	0.45	0.34	0.24	0.29	0.97	0.74	0.69	0.49	0.50	0.39	0.33
	Triple Glazing, *e*=0.10 on surfaces 2 or 3 and 4 or 5											
40	1/4" airspaces	0.54	0.43	0.32	0.37	1.01	0.78	0.73	0.53	0.54	0.43	0.37
41	1/2" airspaces	0.46	0.35	0.25	0.29	0.99	0.76	0.71	0.51	0.52	0.41	0.36
42	1/4" argon spaces	0.48	0.38	0.27	0.32	0.96	0.73	0.68	0.48	0.49	0.38	0.32
43	1/2" argon spaces	0.42	0.32	0.21	0.26	0.95	0.72	0.67	0.47	0.48	0.37	0.31
	Quadruple Glazing, *e*=0.10 on surfaces 2 or 3 and 4 or 5											
44	1/4" airspaces	0.49	0.38	0.28	0.33	0.97	0.74	0.69	0.49	0.50	0.39	0.33
45	1/2" airspaces	0.43	0.32	0.22	0.27	0.94	0.71	0.66	0.46	0.47	0.36	0.30
46	1/4" argon spaces	0.45	0.34	0.24	0.29	0.93	0.70	0.65	0.45	0.46	0.35	0.30
47	1/2" argon spaces	0.41	0.30	0.20	0.24	0.91	0.68	0.63	0.43	0.44	0.33	0.28
48	1/4" krypton spaces	0.41	0.30	0.20	0.24	0.88	0.65	0.60	0.40	0.42	0.31	0.25