Appendix H Construction Assemblies

This appendix contains a detailed listing of many common construction assemblies for roofs/ceilings, walls and floors. For a summary of standard construction assembly U-values, see Tables G-14 through G-18 in the Glossary. For additional information, see R-value and U-value in the Glossary.

Reference Name: W.0.2x4.16

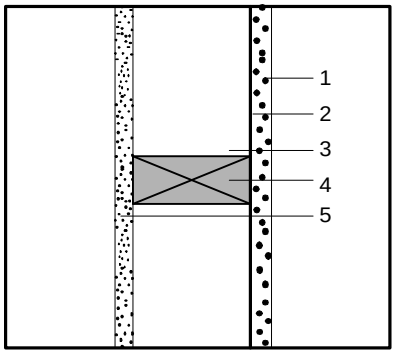

Sketch of Construction Assembly

Assembly Type: (check one)
- Floor
- ✓ Wall
- Ceiling/Roof

Framing Material: Wood

Framing Size: 2 × 4

Framing Spacing: 16 "o.c.

Framing Percentage: (check one)

Wall:
- ✓ 15% (16"o.c.)
- 12% (24"o.c.)
- 9% (48"o.c.)

Floor/Ceiling
- 10% (16"o.c.)
- 7% (24"o.c.)
- 4% (48"o.c.)

Wall Weight / sf: NA (Packages only)

List of Construction Components		**R-Value** Cavity (R_c)	**R-Value** Frame (R_f)
	Outside Surface Air Film	0.170	0.170
1.	0.875 in stucco	0.175	0.175
2.	Building paper (felt)	0.060	0.600
3.	3.5" & greater air space; heat sideways	0.850	-----
4.	2x4 in fir framing	-----	3.465
5.	0.50 in gypsum or plaster board	0.450	0.450
6.			
7.			
	Inside Surface Air Film	0.680	0.680
	Total Unadjusted R-Values:	2.385	5.000
		R_c	R_f

Framing Adjustment Calculation:

$$[(\underset{1 \div R_c}{1/2.385}) \times (\underset{1-(Fr.\% \div 100)}{1-15/100})] + [(\underset{1 \div R_f}{1/5.00}) \times (\underset{Fr.\% \div 100}{15/100})] = \boxed{0.385}$$

Total U-Value

$$\frac{1/0.385}{1 \div \text{Total U-Value}} = \frac{2.591}{\textbf{Total R-Value}}$$

Reference Name: W.0.S2x4.16

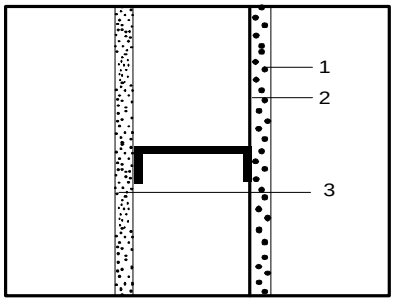

Sketch of Construction Assembly

Assembly Type: (check one)
- Floor
- ✓ Wall
- Ceiling/Roof

Framing Material: Metal

Framing Spacing: 16 "o.c.

Framing Size:
- Actual Depth: 3.625
- Actual Width: 1.625

Cavity Insulation:
- R-value: 0.850
- Knock-out (%): 15.00
- Web Thickness: 0.060

Insulation Tape R-value:
- Interior Flange: 0.0
- Exterior Flange: 0.0

List of Construction Components		**R-Value**
	Outside Surface Air Film	0.170
1.	0.875 in stucco	0.175
2.	Building paper (felt)	0.060
3.	0.50 in gypsum or plaster board	0.450
4.		
5.		
6.		
7.		
	Inside Surface Air Film	0.680

Calculation:

From EZFRAME = **0.449**

Total U-Value

$$\frac{1/0.449}{1 \div \text{Total U-Value}} = \frac{2.23}{\textbf{Total R-Value}}$$

Reference Name: W.0.2x4.24

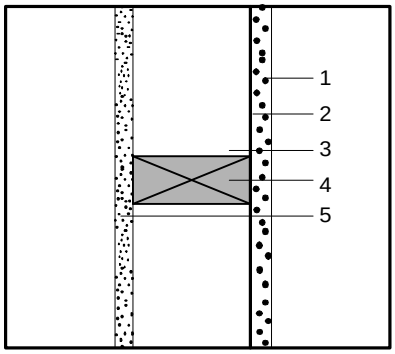

Sketch of Construction Assembly

Assembly Type: (check one)
- Floor
- ✓ Wall
- Ceiling/Roof

Framing Material: Wood

Framing Size: 2 × 4

Framing Spacing: 24 "o.c.

Framing Percentage: (check one)

Wall:		15% (16"o.c.)
	✓	12% (24"o.c.)
		9% (48"o.c.)
Floor/Ceiling		10% (16"o.c.)
		7% (24"o.c.)
		4% (48"o.c.)

Wall Weight / sf: NA (Packages only)

List of Construction Components		**R-Value** Cavity (R_c)	Frame (R_f)
	Outside Surface Air Film	0.170	0.170
1.	0.875 in stucco	0.175	0.175
2.	Building paper (felt)	0.060	0.600
3.	3.5" & greater air space; heat sideways	0.850	-----
4.	2x4 in fir framing	-----	3.465
5.	0.50 in gypsum or plaster board	0.450	0.450
6.			
7.			
	Inside Surface Air Film	0.680	0.680
	Total Unadjusted R-Values:	2.385 (R_c)	5.000 (R_f)

Framing Adjustment Calculation:

$$[(\underset{1\div R_c}{1/2.385}) \times (\underset{1-(Fr.\%\div 100)}{1-12/100})] + [(\underset{1\div R_f}{1/5.000}) \times (\underset{Fr.\%\div 100}{12/100})] = \boxed{0.393}$$

Total U-Value

$$\underset{1\div \text{Total U-Value}}{1/0.393} = \underset{\textbf{Total R-Value}}{2.546}$$

Reference Name: W.0.S2x4.24

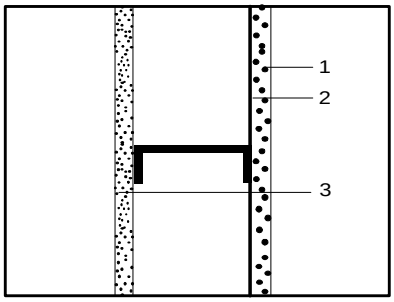

Sketch of Construction Assembly

Assembly Type: (check one)
- Floor
- ✓ Wall
- Ceiling/Roof

Framing Material: Metal

Framing Spacing: 24 "o.c.

Framing Size:

Actual Depth	3.625
Actual Width	1.625

Cavity Insulation:

R-value	0.850
Knock-out (%)	15.00
Web Thickness	0.060

Insulation Tape R-value:

Interior Flange	0.0
Exterior Flange	0.0

List of Construction Components		**R-Value**
	Outside Surface Air Film	0.170
1.	0.875 in stucco	0.175
2.	Building paper (felt)	0.060
3.	0.50 in gypsum or plaster board	0.450
4.		
5.		
6.		
7.		
	Inside Surface Air Film	0.680

Calculation:

From EZFRAME = **0.443**

Total U-Value

$$\underset{1\div \text{Total U-Value}}{1/0.443} = \underset{\textbf{Total R-Value}}{2.260}$$

Reference Name: W.7.2x4.16

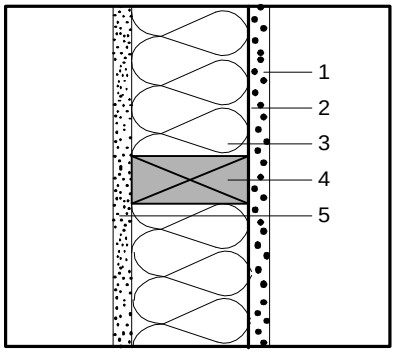

Sketch of Construction Assembly

Assembly Type: (check one)
- Floor
- ✓ Wall
- Ceiling/Roof

Framing Material: Wood

Framing Size: 2 × 4

Framing Spacing: 16 "o.c.

Framing Percentage: (check one)
- Wall: ✓ 15% (16"o.c.)
- 12% (24"o.c.)
- 9% (48"o.c.)
- Floor/Ceiling: 10% (16"o.c.)
- 7% (24"o.c.)
- 4% (48"o.c.)

Wall Weight / sf: NA (Packages only)

List of Construction Components		**R-Value** Cavity (R_c)	**R-Value** Frame (R_f)
	Outside Surface Air Film	0.170	0.170
1.	0.875 in stucco	0.175	0.175
2.	Building paper (felt)	0.060	0.600
3.	R-7 fiberglass insulation	7.000	-----
4.	2x4 in fir framing	-----	3.465
5.	0.50 in gypsum or plaster board	0.450	0.450
6.			
7.			
	Inside Surface Air Film	0.680	0.680
	Total Unadjusted R-Values:	8.535	5.000
		R_c	R_f

Framing Adjustment Calculation:

$$[(\frac{1}{1 \div R_c}) \times (\frac{1-15/100}{1-(Fr.\% \div 100)})] + [(\frac{1}{1 \div R_f}) \times (\frac{15}{Fr.\% \div 100})] = \boxed{0.130}$$

Total U-Value

$$\frac{1/0.130}{1 \div \text{Total U-Value}} = 7.69$$

Total R-Value

Reference Name: W.7.S2x4.16

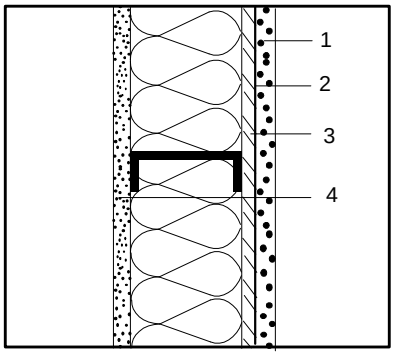

Sketch of Construction Assembly

Assembly Type: (check one)
- Floor
- ✓ Wall
- Ceiling/Roof

Framing Material: Metal

Framing Spacing: 16 "o.c.

Framing Size:
- Actual Depth: 3.625
- Actual Width: 1.625

Cavity Insulation:
- R-value: 7.00
- Knock-out (%): 15.00
- Web Thickness: 0.0600

Insulation Tape R-value:
- Interior Flange: 0.0
- Exterior Flange: 0.0

List of Construction Components		**R-Value**
	Outside Surface Air Film	0.170
1.	0.875 in stucco	0.175
2.	Building paper (felt)	0.060
3.	0.50 in polyisocyanurate	3.500
4.	0.50 in gypsum or plaster board	0.450
5.		
6.		
7.		
	Inside Surface Air Film	0.680

Calculation:

From EZFRAME = $\boxed{0.125}$

Total U-Value

$$\frac{1/0.125}{1 \div \text{Total U-Value}} = 7.990$$

Total R-Value

Reference Name: W.7.2x4.24

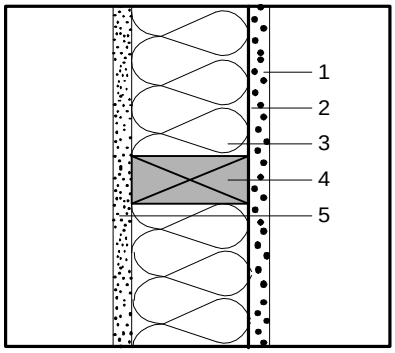

Sketch of Construction Assembly

Assembly Type: (check one)
- Floor
- ✓ Wall
- Ceiling/Roof

Framing Material: Wood

Framing Size: 2 × 4

Framing Spacing: 24 "o.c.

Framing Percentage: (check one)

Wall:		15% (16"o.c.)
	✓	12% (24"o.c.)
		9% (48"o.c.)
Floor/Ceiling		10% (16"o.c.)
		7% (24"o.c.)
		4% (48"o.c.)

Wall Weight / sf: NA (Packages only)

List of Construction Components		**R-Value** Cavity (R_c)	Frame (R_f)
	Outside Surface Air Film	0.170	0.170
1.	0.875 in stucco	0.175	0.175
2.	Building paper (felt)	0.060	0.600
3.	R-7 Fiberglass Insulation	7.000	-----
4.	2x4 in fir framing	-----	3.465
5.	0.50 in gypsum or plaster board	0.450	0.450
6.			
7.			
	Inside Surface Air Film	0.680	0.680
	Total Unadjusted R-Values:	8.535	5.000
		R_c	R_f

Framing Adjustment Calculation:

$$\left[\left(\frac{1/8.535}{1 \div R_c}\right) \times \left(\frac{1-15/100}{1-(Fr.\% \div 100)}\right)\right] + \left[\left(\frac{1/5.00}{1 \div R_f}\right) \times \left(\frac{15/100}{Fr.\% \div 100}\right)\right] = \boxed{0.127}$$

Total U-Value

$$\frac{1/0.127}{1 \div \text{Total U-Value}} = 7.874$$

Total R-Value

Reference Name: W.7.S2x4.24

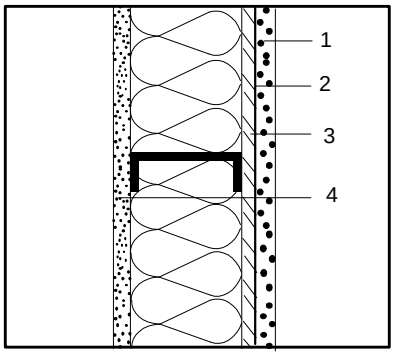

Sketch of Construction Assembly

Assembly Type: (check one)
- Floor
- ✓ Wall
- Ceiling/Roof

Framing Material: Metal

Framing Spacing: 24 "o.c.

Framing Size:
- Actual Depth: 3.625
- Actual Width: 1.625

Cavity Insulation:
- R-value: 7.00
- Knock-out (%): 15.00
- Web Thickness: 0.0600

Insulation Tape R-value:
- Interior Flange: 0.0
- Exterior Flange: 0.0

List of Construction Components		**R-Value**
	Outside Surface Air Film	0.170
1.	0.875 in stucco	0.175
2.	Building paper (felt)	0.060
3.	0.50 in polyisocyanurate	3.500
4.	0.50 in gypsum or plaster board	0.450
5.		
6.		
7.		
	Inside Surface Air Film	0.680

Calculation:

From EZFRAME = **0.117**

Total U-Value

$$\frac{1/0.117}{1 \div \text{Total U-Value}} = 8.530$$

Total R-Value

Reference Name: W.11.2x4.16

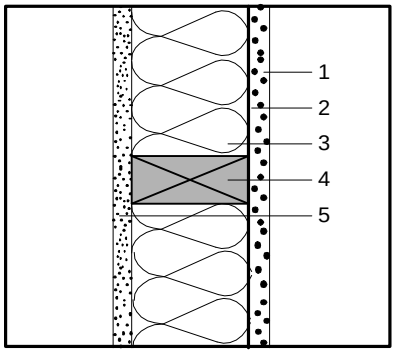

Sketch of Construction Assembly

Assembly Type: (check one)
- Floor
- ✓ Wall
- Ceiling/Roof

Framing Material: Wood

Framing Size: 2 × 4

Framing Spacing: 16 "o.c.

Framing Percentage: (check one)

Wall:
- ✓ 15% (16"o.c.)
- 12% (24"o.c.)
- 9% (48"o.c.)

Floor/Ceiling
- 10% (16"o.c.)
- 7% (24"o.c.)
- 4% (48"o.c.)

Wall Weight / sf: NA (Packages only)

List of Construction Components		**R-Value** Cavity (R_c)	**R-Value** Frame (R_f)
	Outside Surface Air Film	0.170	0.170
1.	0.875 in stucco	0.175	0.175
2.	Building paper (felt)	0.060	0.060
3.	R-11 fiberglass insulation	11.000	-----
4.	2x4 in fir framing	-----	3.465
5.	0.50 in gypsum or plaster board	0.450	0.450
6.			
7.			
	Inside Surface Air Film	0.680	0.680
	Total Unadjusted R-Values:	12.535	5.00
		R_c	R_f

Framing Adjustment Calculation:

$$[(\frac{1}{12.535}) \times (\frac{1-15}{100})] + [(\frac{1}{5.00}) \times (\frac{15}{100})] =$$

($1 \div R_c$; $1-(Fr.\% \div 100)$; $1 \div R_f$; $Fr.\% \div 100$)

0.098

Total U-Value

$$\frac{1/0.098}{1 \div \text{Total U-Value}} = \frac{10.204}{\text{Total R-Value}}$$

Reference Name: W.11.S2x4.16

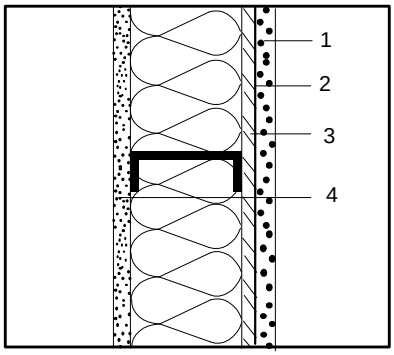

Sketch of Construction Assembly

Assembly Type: (check one)
- Floor
- ✓ Wall
- Ceiling/Roof

Framing Material: Metal

Framing Spacing: 16 "o.c.

Framing Size:
- Actual Depth: 3.625
- Actual Width: 1.625

Cavity Insulation:
- R-value: 11.00
- Knock-out (%): 15.00
- Web Thickness: 0.060

Insulation Tape R-value:
- Interior Flange: 0.0
- Exterior Flange: 0.0

List of Construction Components		**R-Value**
	Outside Surface Air Film	0.170
1.	0.875 in stucco	0.175
2.	Building paper (felt)	0.060
3.	0.75 in polyisocyanurate	5.250
4.	0.50 in gypsum or plaster board	0.450
5.		
6.		
7.		
	Inside Surface Air Film	0.680

Calculation:

From EZFRAME =

0.096

Total U-Value

$$\frac{1/0.096}{1 \div \text{Total U-Value}} = \frac{10.360}{\text{Total R-Value}}$$

Reference Name: W.11.2x4.24

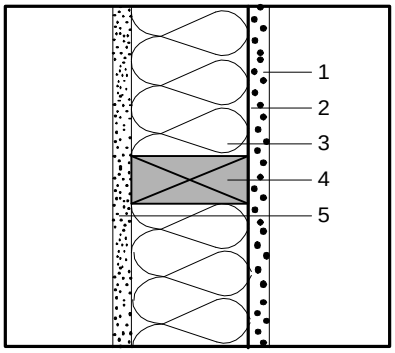

Sketch of Construction Assembly

Assembly Type: (check one)
- Floor
- ✓ Wall
- Ceiling/Roof

Framing Material: Wood

Framing Size: 2 × 4

Framing Spacing: 24 "o.c.

Framing Percentage: (check one)

Wall:		15% (16"o.c.)
	✓	12% (24"o.c.)
		9% (48"o.c.)
Floor/Ceiling		10% (16"o.c.)
		7% (24"o.c.)
		4% (48"o.c.)

Wall Weight / sf: NA (Packages only)

List of Construction Components		**R-Value** Cavity (R_c)	Frame (R_f)
	Outside Surface Air Film	0.170	0.170
1.	0.875 in stucco	0.175	0.175
2.	Building paper (felt)	0.060	0.600
3.	R-11 fiberglass insulation	11.00	-----
4.	2x4 in fir framing	-----	3.465
5.	0.50 in gypsum or plaster board	0.450	0.450
6.			
7.			
	Inside Surface Air Film	0.680	0.680
	Total Unadjusted R-Values:	12.535	5.00
		R_c	R_f

Framing Adjustment Calculation:

$$[(\frac{1}{12.535}) \times (\frac{1-12}{100})] + [(\frac{1}{5.00}) \times (\frac{12}{100})] = \boxed{0.094}$$

1÷R^c; 1-(Fr.% ÷100); 1÷R^f; Fr.% ÷100

Total U-Value

$$\frac{1}{0.094} = 10.638$$

1÷Total U-Value = **Total R-Value**

Reference Name: W.11.S2x4.24

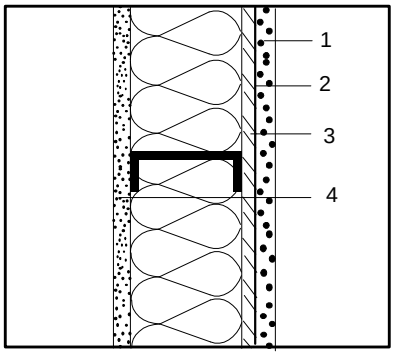

Sketch of Construction Assembly

Assembly Type: (check one)
- Floor
- ✓ Wall
- Ceiling/Roof

Framing Material: Metal

Framing Spacing: 24 "o.c.

Framing Size: Actual Depth 3.625; Actual Width 1.625

Cavity Insulation: R-value 11.000; Knock-out (%) 15.000; Web Thickness 0.060

Insulation Tape R-value: Interior Flange 0.0; Exterior Flange 0.0

List of Construction Components		**R-Value**
	Outside Surface Air Film	0.170
1.	0.875 in stucco	0.175
2.	Building paper (felt)	0.060
3.	0.75 in polyisocyanurate	5.250
4.	0.50 in gypsum or plaster board	0.450
5.		
6.		
7.		
	Inside Surface Air Film	0.680

Calculation:

From EZFRAME = **0.090**

Total U-Value

$$\frac{1}{0.090} = 11.140$$

1÷Total U-Value = **Total R-Value**

Reference Name: W.13.2x4.16

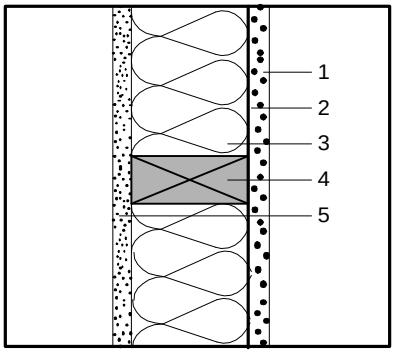

Sketch of Construction Assembly

Assembly Type: (check one)
- Floor
- ✓ Wall
- Ceiling/Roof

Framing Material: Wood

Framing Size: 2 × 4

Framing Spacing: 16 "o.c.

Framing Percentage: (check one)

Wall:
- ✓ 15% (16"o.c.)
- 12% (24"o.c.)
- 9% (48"o.c.)

Floor/Ceiling
- 10% (16"o.c.)
- 7% (24"o.c.)
- 4% (48"o.c.)

Wall Weight / sf: NA (Packages only)

List of Construction Components		**R-Value** Cavity (R_c)	**R-Value** Frame (R_f)
	Outside Surface Air Film	0.170	0.170
1.	0.875 in stucco	0.175	0.175
2.	Building paper (felt)	0.060	0.600
3.	R-13 fiberglass insulation	13.00	-----
4.	2x4 in fir framing	-----	3.465
5.	0.50 in gypsum or plaster board	0.450	0.450
6.			
7.			
	Inside Surface Air Film	0.680	0.680
	Total Unadjusted R-Values:	14.535 (R_c)	5.00 (R_f)

Framing Adjustment Calculation:

$$[(\frac{1}{1+R^c}) \times (\frac{1}{1-(Fr.\% \div 100)})] + [(\frac{1}{1+R^f}) \times (\frac{15}{Fr.\% \div 100})] = \boxed{0.088}$$

Total U-Value

$$\frac{1}{1 \div \text{Total U-Value}} = 11.364$$

Total R-Value

Reference Name: W.13.S2x4.16

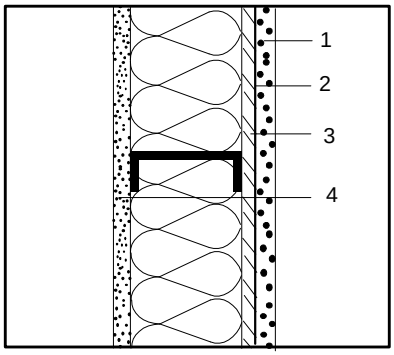

Sketch of Construction Assembly

Assembly Type: (check one)
- Floor
- ✓ Wall
- Ceiling/Roof

Framing Material: Metal

Framing Spacing: 16 "o.c.

Framing Size:
- Actual Depth: 3.625
- Actual Width: 1.625

Cavity Insulation:
- R-value: 13.000
- Knock-out (%): 15.00
- Web Thickness: 0.060

Insulation Tape R-value:
- Interior Flange: 0.0
- Exterior Flange: 0.0

List of Construction Components		**R-Value**
	Outside Surface Air Film	0.170
1.	0.875 in stucco	0.175
2.	Building paper (felt)	0.060
3.	1.00 in Polyisocyanurate	7.000
4.	0.50 in gypsum or plaster board	0.450
5.		
6.		
7.		
	Inside Surface Air Film	0.680

Calculation:

From EZFRAME = $\boxed{0.081}$

Total U-Value

$$\frac{1}{1 \div \text{Total U-Value}} = 12.330$$

Total R-Value

Reference Name: W.13.2x4.24

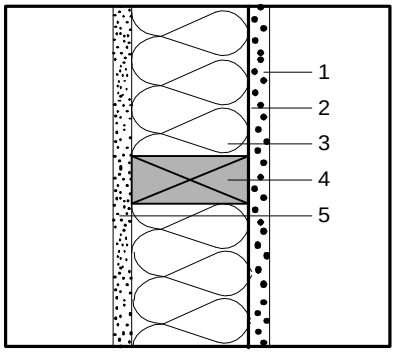

Sketch of Construction Assembly

Assembly Type: (check one)
- Floor
- ✓ Wall
- Ceiling/Roof

Framing Material: Wood

Framing Size: 2 × 4

Framing Spacing: 24 "o.c.

Framing Percentage: (check one)
- Wall:
  - 15% (16"o.c.)
  - ✓ 12% (24"o.c.)
  - 9% (48"o.c.)
- Floor/Ceiling
  - 10% (16"o.c.)
  - 7% (24"o.c.)
  - 4% (48"o.c.)

Wall Weight / sf: NA (Packages only)

List of Construction Components		R-Value: Cavity (R_c)	R-Value: Frame (R_f)
	Outside Surface Air Film	0.170	0.170
1.	0.875 in stucco	0.175	0.175
2.	Building paper (felt)	0.060	0.600
3.	R-13 fiberglass insulation	13.000	-----
4.	2x4 in fir framing	-----	3.465
5.	0.50 in gypsum or plaster board	0.450	0.450
6.			
7.			
	Inside Surface Air Film	0.680	0.680
	Total Unadjusted R-Values:	14.535	5.00
		R_c	R_f

Framing Adjustment Calculation:

$$\left[\left(\frac{1/14.535}{1 \div R^c}\right) \times \left(\frac{1-12/100}{1-(Fr.\% \div 100)}\right)\right] + \left[\left(\frac{1/5.00}{1 \div R^f}\right) \times \left(\frac{12/100}{Fr.\% \div 100}\right)\right] = \boxed{0.085}$$

Total U-Value

$$\frac{1/0.085}{1 \div \text{Total U-Value}} = 10.620$$

Total R-Value

Reference Name: W.13.S2x4.24

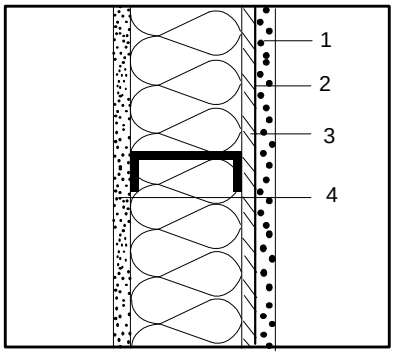

Sketch of Construction Assembly

Assembly Type: (check one)
- Floor
- ✓ Wall
- Ceiling/Roof

Framing Material: Metal

Framing Spacing: 24 "o.c.

Framing Size:
- Actual Depth: 3.625
- Actual Width: 1.625

Cavity Insulation:
- R-value: 13.00
- Knock-out (%): 15.00
- Web Thickness: 0.060

Insulation Tape R-value:
- Interior Flange: 0.0
- Exterior Flange: 0.0

List of Construction Components		R-Value
	Outside Surface Air Film	0.170
1.	0.875 in stucco	0.175
2.	Building paper (felt)	0.060
3.	0.75 in polyisocyanurate	5.250
4.	0.50 in gypsum or plaster board	0.450
5.		
6.		
7.		
	Inside Surface Air Film	0.680

Calculation:

From EZFRAME = **0.087**

Total U-Value

$$\frac{1/0.087}{1 \div \text{Total U-Value}} = 11.460$$

Total R-Value

Reference Name: WP.14.2x4.48

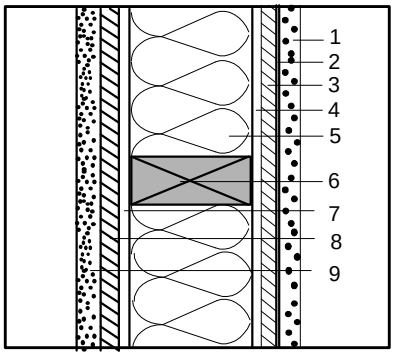

Sketch of Construction Assembly

Assembly Type: (check one)		Floor
	✓	Wall
		Ceiling/Roof
Framing Material:	Wood	
Framing Size:	2 × 4	
Framing Spacing:	48 "o.c.	
Framing Percentage: (check one)	Wall:	15% (16"o.c.)
		12% (24"o.c.)
	✓	9% (48"o.c.)
	Floor/Ceiling	10% (16"o.c.)
		7% (24"o.c.)
		4% (48"o.c.)
Wall Weight / sf: (Packages only)	NA	

List of Construction Components		**R-Value** Cavity (R_c)	Frame (R_f)
	Outside Surface Air Film	0.170	0.170
1.	0.875 in stucco	0.175	0.175
2.	Building paper (felt)	0.060	0.060
3.	0.375 in plywood	0.470	0.470
4.	0.875 in Furring Channel	0.800	0.800
5.	3 5/8 in EPS foam insulation @ R-3.85/in	13.956	-----
6.	2X4 in fir framing	-----	3.465
7.	0.875 in Furring Channel	0.800	0.800
8.	0.375 in plywood	0.470	0.470
9.	0.50 in gypsum or plaster board	0.450	0.450
	Inside Surface Air Film	0.680	0.680
	Total Unadjusted R-Values:	18.031	7.540
		R_c	R_f

Framing Adjustment Calculation:

$$[(\frac{1}{18.031}) \times (\frac{1-9}{100})] + [(\frac{1}{7.540}) \times (\frac{9}{100})] = \boxed{0.062}$$

1÷R_c 1-(Fr.% ÷100) 1÷R_f Fr.% ÷100

Total U-Value

$$\frac{1/0.062}{1 \div \text{Total U-Value}} = \frac{16.129}{\text{Total R-Value}}$$

Reference Name: WP.14.S2x4.48

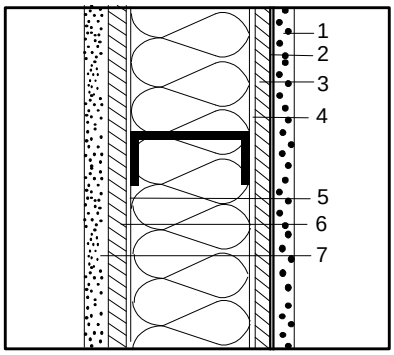

Sketch of Construction Assembly

Assembly Type: (check one)			Floor
	✓		Wall
			Ceiling/Roof
Framing Material:	Metal		
Framing Spacing:	48 "o.c.		
Framing Size:		Actual Depth	3.625
		Actual Width	1.625
Cavity Insulation:		R-value	14.00
		Knock-out (%)	15.00
		Web Thickness	0.060
Insulation Tape R-value:		Interior Flange	0.0
		Exterior Flange	0.0

List of Construction Components		**R-Value**
	Outside Surface Air Film	0.170
1.	0.875 in stucco	0.175
2.	Building paper (felt)	0.060
3.	1.00 in polyisocyanurate	7.000
4.	0.875 in Furring Channel	0.800
5.	0.875 in Furring Channel	0.800
6.	0.375 in plywood	0.470
7.	0.50 in gypsum or plaster board	0.450
	Inside Surface Air Film	0.680

Calculation:

From EZFRAME = **0.062**

Total U-Value

$$\frac{1/0.062}{1 \div \text{Total U-Value}} = \frac{16.26}{\text{Total R-Value}}$$

Reference Name: W.15.2x4.16

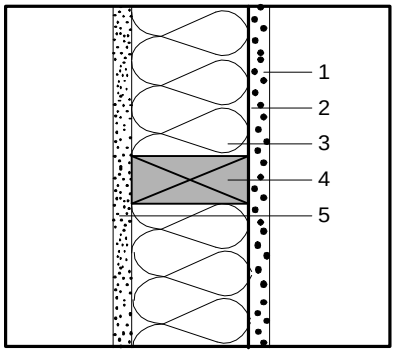

Sketch of Construction Assembly

Assembly Type: (check one)		Floor	
	✓	Wall	
		Ceiling/Roof	
Framing Material:	Wood		
Framing Size:	2 × 4		
Framing Spacing:	16	"o.c.	
Framing Percentage: (check one)	Wall:	✓	15% (16"o.c.)
			12% (24"o.c.)
			9% (48"o.c.)
	Floor/Ceiling		10% (16"o.c.)
			7% (24"o.c.)
			4% (48"o.c.)
Wall Weight / sf: (Packages only)	NA		

List of Construction Components		**R-Value** Cavity (R_c)	**R-Value** Frame (R_f)
	Outside Surface Air Film	0.170	0.170
1.	0.875 in stucco	0.175	0.175
2.	Building paper (felt)	0.060	0.060
3.	R-15 fiberglass insulation	15.000	-----
4.	2x4 in fir framing	-----	3.465
5.	0.50 in gypsum or plaster board	0.450	0.450
6.			
7.			
	Inside Surface Air Film	0.680	0.680
	Total Unadjusted R-Values:	16.353	5.000
		R_c	R_f

Framing Adjustment Calculation:

[(1/16.535) × (1-15/100)] + [(1/5.00) × (15/100)] = **0.081**

1÷Rc; 1-(Fr.% ÷100); 1÷R_f; Fr.% ÷100

Total U-Value

1/0.081 (1÷Total U-Value) = 12.346 **Total R-Value**

Reference Name: W.15.S2x4.16

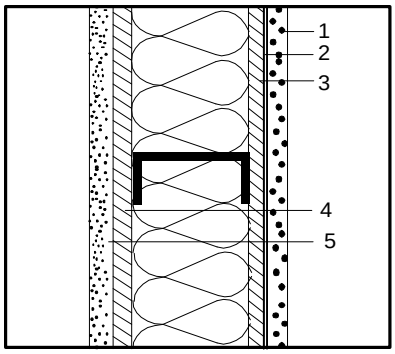

Sketch of Construction Assembly

Assembly Type: (check one)		Floor	
	✓	Wall	
		Ceiling/Roof	
Framing Material:	Metal		
Framing Spacing:	16	"o.c.	
Framing Size:	Actual Depth	3.625	
	Actual Width	1.625	
Cavity Insulation:	R-value	15.00	
	Knock-out (%)	15.00	
	Web Thickness	0.060	
Insulation Tape R-value:	Interior Flange		
	Exterior Flange		

List of Construction Components		**R-Value**
	Outside Surface Air Film	0.170
1.	0.875 in stucco	0.175
2.	Building paper (felt)	0.060
3.	0.50 in Polyisocyanurate	3.500
4.	0.50 in Polyisocyanurate	3.500
5.	0.50 in gypsum or plaster board	0.450
6.		
7.		
	Inside Surface Air Film	0.680

Calculation:

From EZFRAME = **0.080**

Total U-Value

1/0.080 (1÷Total U-Value) = 12.510 **Total R-Value**

Reference Name: W.15.2x4.24

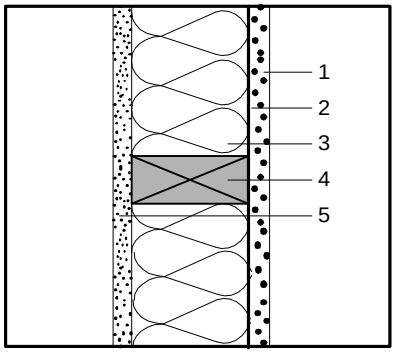

Sketch of Construction Assembly

Assembly Type: (check one)
- Floor
- ✓ Wall
- Ceiling/Roof

Framing Material: Wood

Framing Size: 2 × 4

Framing Spacing: 24 "o.c.

Framing Percentage: (check one)

Wall:
- 15% (16"o.c.)
- ✓ 12% (24"o.c.)
- 9% (48"o.c.)

Floor/Ceiling
- 10% (16"o.c.)
- 7% (24"o.c.)
- 4% (48"o.c.)

Wall Weight / sf: NA (Packages only)

List of Construction Components		**R-Value** Cavity (R_c)	**R-Value** Frame (R_f)
	Outside Surface Air Film	0.170	0.170
1.	0.875 in stucco	0.175	0.175
2.	Building paper (felt)	0.060	0.060
3.	R-15 fiberglass insulation	15.000	-----
4.	2x4 in fir framing	-----	3.465
5.	0.50 in gypsum or plaster board	0.450	0.450
6.			
7.			
	Inside Surface Air Film	0.680	0.680
	Total Unadjusted R-Values:	16.535	5.00
		R_c	R_f

Framing Adjustment Calculation:

$$[(\frac{1}{16.535}) \times (\frac{1-12}{100})] + [(\frac{1}{5.00}) \times (\frac{12}{100})] = \boxed{0.077}$$

1÷Rc; 1-(Fr.% ÷100); 1÷R_f; Fr.% ÷100

Total U-Value

$$\frac{1}{0.077} = 12.987$$

1÷Total U-Value = **Total R-Value**

Reference Name: W.15.S2x4.24

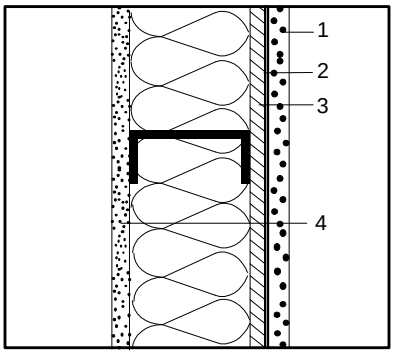

Sketch of Construction Assembly

Assembly Type: (check one)
- Floor
- ✓ Wall
- Ceiling/Roof

Framing Material: Metal

Framing Spacing: 24 "o.c.

Framing Size:
- Actual Depth: 3.625
- Actual Width: 1.625

Cavity Insulation:
- R-value: 15.00
- Knock-out (%): 15.00
- Web Thickness: 0.060

Insulation Tape R-value:
- Interior Flange:
- Exterior Flange:

List of Construction Components		**R-Value**
	Outside Surface Air Film	0.170
1.	0.875 in stucco	0.175
2.	Building paper (felt)	0.060
3.	1 in Polyisocyanurate	7.000
4.	0.50 in gypsum or plaster board	0.450
5.		
6.		
7.		
	Inside Surface Air Film	0.680

Calculation:

From EZFRAME = **0.074**

Total U-Value

$$\frac{1}{0.074} = 13.470$$

1÷Total U-Value = **Total R-Value**

Reference Name: W.19.2x6.16

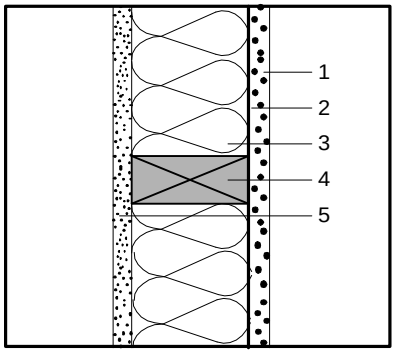

Sketch of Construction Assembly

Assembly Type: (check one)
- Floor
- ✓ Wall
- Ceiling/Roof

Framing Material: Wood

Framing Size: 2 × 6

Framing Spacing: 16 "o.c.

Framing Percentage: (check one)

Wall:
- ✓ 15% (16"o.c.)
- 12% (24"o.c.)
- 9% (48"o.c.)

Floor/Ceiling
- 10% (16"o.c.)
- 7% (24"o.c.)
- 4% (48"o.c.)

Wall Weight / sf: NA (Packages only)

List of Construction Components		**R-Value** Cavity (R_c)	Frame (R_f)
	Outside Surface Air Film	0.170	0.170
1.	0.875 in stucco	0.175	0.175
2.	Building paper (felt)	0.060	0.060
3.	R-19 fiberglass inuslation	17.800	-----
4.	2x6 in fir framing	-----	5.445
5.	0.50 in gypsum or plaster board	0.450	0.450
6.			
7.			
	Inside Surface Air Film	0.680	0.680
	Total Unadjusted R-Values:	19.335 (R_c)	6.980 (R_f)

Framing Adjustment Calculation:

[(1/19.335) × (1-15/100)] + [(1/6.98) × (15/100)] = **0.065**

1÷Rc; 1-(Fr.% ÷100); 1÷R_f; Fr.% ÷100

Total U-Value

1/0.065 (1÷Total U-Value) = 15.385 **Total R-Value**

Reference Name: W.19.S2x6.16

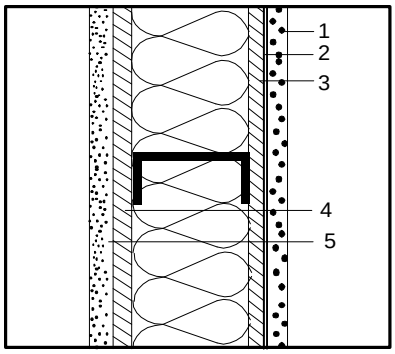

Sketch of Construction Assembly

Assembly Type: (check one)
- Floor
- ✓ Wall
- Ceiling/Roof

Framing Material: Metal

Framing Spacing: 16 "o.c.

Framing Size:
- Actual Depth: 6.000
- Actual Width: 1.625

Cavity Insulation:
- R-value: 19.00
- Knock-out (%): 15.00
- Web Thickness: 0.060

Insulation Tape R-value:
- Interior Flange:
- Exterior Flange:

List of Construction Components		**R-Value**
	Outside Surface Air Film	0.170
1.	0.875 in stucco	0.175
2.	Building paper (felt)	0.060
3.	0.75 in polyiscyanurate	5.250
4.	0.50 in polyiscyanurate	3.500
5.	0.50 in gypsum or plaster board	0.450
6.		
7.		
	Inside Surface Air Film	0.680

Calculation:

From EZFRAME = **0.064**

Total U-Value

1/0.064 (1÷Total U-Value) = 15.530 **Total R-Value**

Reference Name: W.19.2x6.24

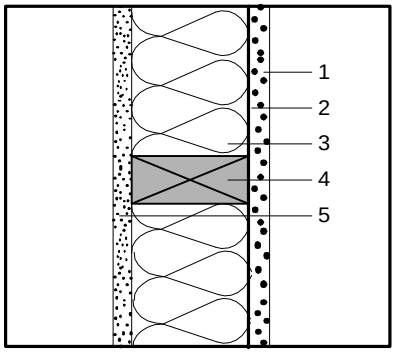

Sketch of Construction Assembly

Assembly Type: (check one)
- Floor
- ✓ Wall
- Ceiling/Roof

Framing Material: Wood

Framing Size: 2 × 6

Framing Spacing: 24 "o.c.

Framing Percentage: (check one)

Wall:
- 15% (16"o.c.)
- ✓ 12% (24"o.c.)
- 9% (48"o.c.)

Floor/Ceiling
- 10% (16"o.c.)
- 7% (24"o.c.)
- 4% (48"o.c.)

Wall Weight / sf: NA
(Packages only)

List of Construction Components		**R-Value** Cavity (R_c)	Frame (R_f)
	Outside Surface Air Film	0.170	0.170
1.	0.875 in stucco	0.175	0.175
2.	Building paper (felt)	0.060	0.060
3.	R-19 fiberglass insulation	17.800	-----
4.	2x6 in fir framing	-----	5.445
5.	0.50 in gypsum or plaster board	0.450	0.450
6.			
7.			
	Inside Surface Air Film	0.680	0.680
	Total Unadjusted R-Values:	19.335	6.980
		R_c	R_f

Framing Adjustment Calculation:

$$[(\frac{1}{1 \div R_c}) \times (\frac{1-12/100}{1-(Fr.\% \div 100)})] + [(\frac{1}{1 \div R_f}) \times (\frac{12/100}{Fr.\% \div 100})] = \boxed{0.063}$$

Total U-Value

$$\frac{1/0.063}{1 \div \text{Total U-Value}} = 15.873$$

Total R-Value

Reference Name: W.19.S2x6.24

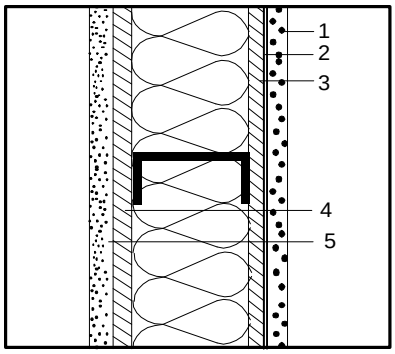

Sketch of Construction Assembly

Assembly Type: (check one)
- Floor
- ✓ Wall
- Ceiling/Roof

Framing Material: Metal

Framing Spacing: 24 "o.c.

Framing Size:
- Actual Depth: 6.000
- Actual Width: 1.625

Cavity Insulation:
- R-value: 19.00
- Knock-out (%): 15.00
- Web Thickness: 0.060

Insulation Tape R-value:
- Interior Flange:
- Exterior Flange:

List of Construction Components		**R-Value**
	Outside Surface Air Film	0.170
1.	0.875 in stucco	0.175
2.	Building paper (felt)	0.060
3.	0.75 in polyisocyanurate	5.250
4.	0.50 in polyisocyanurate	3.500
5.	0.50 in gypsum board	0.450
6.		
7.		
	Inside Surface Air Film	0.680

Calculation:

From EZFRAME = $\boxed{0.060}$

Total U-Value

$$\frac{1/0.060}{1 \div \text{Total U-Value}} = 16.750$$

Total R-Value

Reference Name: W.21.2x6.16

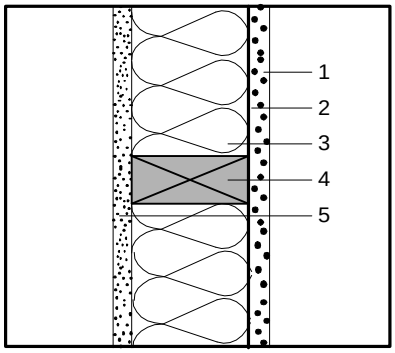

Sketch of Construction Assembly

Assembly Type: (check one)
- Floor
- ✓ Wall
- Ceiling/Roof

Framing Material: Wood

Framing Size: 2 × 6

Framing Spacing: 16 "o.c.

Framing Percentage: (check one)

Wall:
- 15% (16"o.c.)
- ✓ 12% (24"o.c.)
- 9% (48"o.c.)

Floor/Ceiling
- 10% (16"o.c.)
- 7% (24"o.c.)
- 4% (48"o.c.)

Wall Weight / sf: NA (Packages only)

List of Construction Components		**R-Value** Cavity (R_c)	**R-Value** Frame (R_f)
	Outside Surface Air Film	0.170	0.170
1.	0.875 in stucco	0.175	0.175
2.	Building paper (felt)	0.060	0.060
3.	R-21 fiberglass insulation	21.000	-----
4.	2x6 in fir framing	-----	5.445
5.	0.50 in gypsum or plaster board	0.450	0.450
6.			
7.			
	Inside Surface Air Film	0.680	0.680
	Total Unadjusted R-Values:	22.535 (R_c)	6.980 (R_f)

Framing Adjustment Calculation:

$$\left[\left(\frac{1/22.535}{1 \div R_c}\right) \times \left(\frac{1-15/100}{1-(Fr.\% \div 100)}\right)\right] + \left[\left(\frac{1/6.980}{1 \div Rf}\right) \times \left(\frac{15/100}{Fr.\% \div 100}\right)\right] = \boxed{0.059}$$

Total U-Value

$$\frac{1/0.059}{1 \div \text{Total U-Value}} = 16.949$$

Total R-Value

Reference Name: W.21.S2x6.16

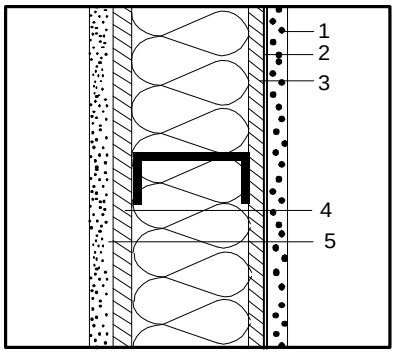

Sketch of Construction Assembly

Assembly Type: (check one)
- Floor
- ✓ Wall
- Ceiling/Roof

Framing Material: Metal

Framing Spacing: 16 "o.c.

Framing Size:
- Actual Depth: 6.000
- Actual Width: 1.625

Cavity Insulation:
- R-value: 21.00
- Knock-out (%): 15.00
- Web Thickness: 0.060

Insulation Tape R-value:
- Interior Flange:
- Exterior Flange:

List of Construction Components		**R-Value**
	Outside Surface Air Film	0.170
1.	0.875 in stucco	0.175
2.	Building paper (felt)	0.060
3.	1.0 in polyisocyanurate	7.000
4.	0.5 in polyisocyanurate	3.500
5.	0.50 in gypsum or plaster board	0.450
6.		
7.		
	Inside Surface Air Film	0.680

Calculation:

From EZFRAME = **0.057**

Total U-Value

$$\frac{1/0.057}{1 \div \text{Total U-Value}} = 17.440$$

Total R-Value

Reference Name: W.21.2x6.24

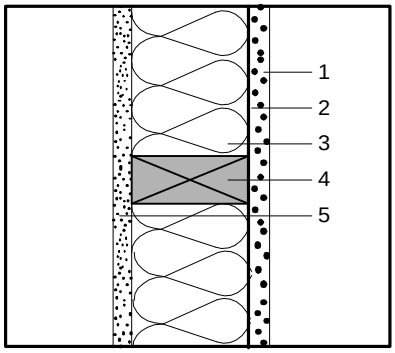

Sketch of Construction Assembly

Assembly Type: (check one)
- Floor
- ✓ Wall
- Ceiling/Roof

Framing Material: Wood

Framing Size: 2 × 6

Framing Spacing: 24 "o.c.

Framing Percentage: (check one)

Wall:
- 15% (16"o.c.)
- ✓ 12% (24"o.c.)
- 9% (48"o.c.)

Floor/Ceiling
- 10% (16"o.c.)
- 7% (24"o.c.)
- 4% (48"o.c.)

Wall Weight / sf: NA
(Packages only)

List of Construction Components		**R-Value** Cavity (R_c)	Frame (R_f)
	Outside Surface Air Film	0.170	0.170
1.	0.875 in stucco	0.175	0.175
2.	Building paper (felt)	0.060	0.060
3.	R-21 fiberglass insulation	21.000	-----
4.	2x6 in fir framing	-----	3.465
5.	0.50 in gypsum or plaster board	0.450	0.450
6.			
7.			
	Inside Surface Air Film	0.680	0.680
	Total Unadjusted R-Values:	22.535	6.980
		R_c	R_f

Framing Adjustment Calculation:

$$\left[\left(\frac{1/22.535}{1 \div Rc}\right) \times \left(\frac{1-12/100}{1-(Fr.\% \div 100)}\right)\right] + \left[\left(\frac{1/6.98}{1 \div R_f}\right) \times \left(\frac{12/100}{Fr.\% \div 100}\right)\right] = \boxed{0.056}$$

Total U-Value

$$\frac{1/0.056}{1 \div \text{Total U-Value}} = 17.857$$

Total R-Value

Reference Name: W.21.S2x6.24

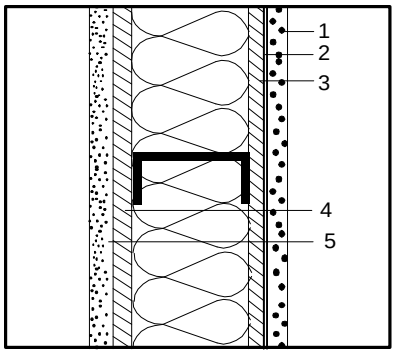

Sketch of Construction Assembly

Assembly Type: (check one)
- Floor
- ✓ Wall
- Ceiling/Roof

Framing Material: Metal

Framing Spacing: 24 "o.c.

Framing Size:
- Actual Depth: 6.000
- Actual Width: 1.625

Cavity Insulation:
- R-value: 21.00
- Knock-out (%): 15.00
- Web Thickness: 0.060

Insulation Tape R-value:
- Interior Flange:
- Exterior Flange:

List of Construction Components		**R-Value**
	Outside Surface Air Film	0.170
1.	0.875 in stucco	0.175
2.	Building paper (felt)	0.060
3.	1.0 in polyisocyanurate	7.000
4.	0.5 in polyisocyanurate	3.500
5.	0.50 in gypsum or plaster board	0.450
6.		
7.		
	Inside Surface Air Film	0.680

Calculation:

From EZFRAME = $\boxed{0.053}$

Total U-Value

$$\frac{1/0.053}{1 \div \text{Total U-Value}} = 18.720$$

Total R-Value

Reference Name: WP.22.2x6.48

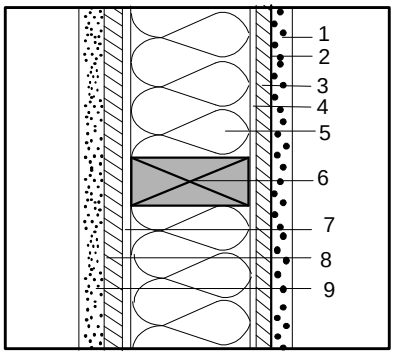

Sketch of Construction Assembly

Assembly Type: (check one)
- Floor
- ✓ Wall
- Ceiling/Roof

Framing Material: Wood

Framing Size: 2 × 6

Framing Spacing: 48 "o.c.

Framing Percentage: (check one)

Wall:		15% (16"o.c.)
		12% (24"o.c.)
	✓	9% (48"o.c.)
Floor/Ceiling		10% (16"o.c.)
		7% (24"o.c.)
		4% (48"o.c.)

Wall Weight / sf: (Packages only) NA

List of Construction Components		R-Value: Cavity (R_c)	R-Value: Frame (R_f)
	Outside Surface Air Film	0.170	0.170
1.	0.875 in stucco	0.175	0.175
2.	Building paper (felt)	0.060	0.060
3.	0.375 in plywood	0.470	0.470
4.	0.875 in Furring Channel	0.800	0.800
5.	R-21.656 EPS foam insulation	21.656	-----
6.	2X6 in fir framing	-----	5.445
7.	0.875 in Furring Channel	0.800	0.800
8.	0.375 in plywood	0.470	0.470
9.	0.50 in gypsum or plaster board	0.450	0.450
	Inside Surface Air Film	0.680	0.680
	Total Unadjusted R-Values:	25.731	9.520
		R_c	R_f

Framing Adjustment Calculation:

$$\left[\left(\frac{1/25.731}{1 \div R_c}\right) \times \left(\frac{1-9/100}{1-(Fr.\% \div 100)}\right)\right] + \left[\left(\frac{1/9.52}{1 \div R_f}\right) \times \left(\frac{9/100}{Fr.\% \div 100}\right)\right] = \boxed{0.044}$$

Total U-Value

$$\frac{1/0.044}{1 \div \text{Total U-Value}} = \frac{22.727}{\text{Total R-Value}}$$

Reference Name: WP.22.S2x6.48

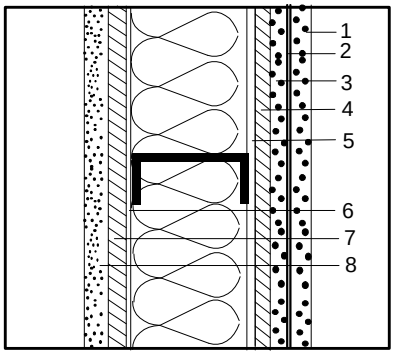

Sketch of Construction Assembly

Assembly Type: (check one)
- Floor
- ✓ Wall
- Ceiling/Roof

Framing Material: Metal

Framing Spacing: 48 "o.c.

Framing Size:
- Actual Depth: 6.000
- Actual Width: 1.625

Cavity Insulation:
- R-value: 21.700
- Knock-out (%): 15.00
- Web Thickness: 0.060

Insulation Tape R-value:
- Interior Flange:
- Exterior Flange:

List of Construction Components		R-Value
	Outside Surface Air Film	0.170
1.	0.875 in stucco	0.175
2.	Building paper (felt)	0.060
3.	1.50 in polyisocyanurate	10.500
4.	0.50 in plywood	0.630
5.	0.875 in Furring channel	0.800
6.	0.875 in Furring channel	0.800
7.	0.50 in plywood	0.630
8.	0.50 in gypsum or plaster board	0.450
	Inside Surface Air Film	0.680

Calculation:

From EZFRAME = $\boxed{0.044}$

Total U-Value

$$\frac{1/0.044}{1 \div \text{Total U-Value}} = \frac{22.83}{\text{Total R-Value}}$$

Reference Name: R.0.2x6.16

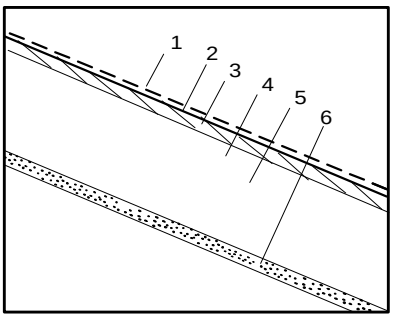

Sketch of Construction Assembly

Assembly Type: (check one)
- ___ Floor
- ___ Wall
- ✓ Ceiling/Roof

Framing Material: Wood

Framing Size: 2 × 6

Framing Spacing: 16 "o.c.

Framing Percentage: (check one)
- Wall: ___ 15% (16"o.c.)
- ___ 12% (24"o.c.)
- ___ 9% (48"o.c.)
- Floor/Ceiling: ✓ 10% (16"o.c.)
- ___ 7% (24"o.c.)
- ___ 4% (48"o.c.)

Wall Weight / sf: (Packages only) NA

List of Construction Components		**R-Value** Cavity (R_c)	**R-Value** Frame (R_f)
	Outside Surface Air Film	0.170	0.170
1.	Asphalt shingle roofing	0.440	0.440
2.	Building paper (felt)	0.060	0.060
3.	0.50 in plywood	0.620	0.620
4.	3.5 in & greater air space; heat flow up	**0.800**	-----
5.	2x6 in fir framing	-----	5.445
6.	0.50 in gypsum or plaster board	0.450	0.450
7.			
	Inside Surface Air Film	0.610	0.610
	Total Unadjusted R-Values:	3.150	7.795
		R_c	R_f

Framing Adjustment Calculation:

[(1/3.150) × (1-10/100)] + [(1/7.795) × (10/100)] = **0.298**

($1 \div R_c$) (1-(Fr.% ÷100)) ($1 \div R_f$) (Fr.% ÷100) — **Total U-Value**

1/0.298 (1÷Total U-Value) = 3.356 **Total R-Value**

Reference Name: R.0.S2X6.16

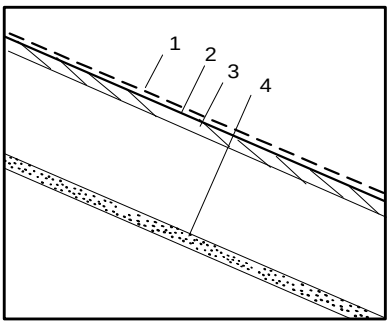

Sketch of Construction Assembly

Assembly Type: (check one)
- ___ Floor
- ___ Wall
- ✓ Ceiling/Roof

Framing Material: Metal

Framing Spacing: 16 "o.c.

Framing Size:
- Actual Depth: 6.000
- Actual Width: 1.625

Cavity Insulation:
- R-value: 0.800
- Knock-out (%): 15.00
- Web Thickness: 0.06

Insulation Tape R-value:
- Interior Flange: ___
- Exterior Flange: ___

List of Construction Components		**R-Value**
	Outside Surface Air Film	0.170
1.	Asphalt shingle	0.440
2.	Building paper (felt)	0.060
3.	0.50 in plywood	0.630
4.	0.50 in gypsum or plaster board	0.450
5.		
6.		
7.		
	Inside Surface Air Film	0.620

Calculation:

From EZFRAME = **0.323** **Total U-Value**

1/0.323 (1÷Total U-Value) = 3.090 **Total R-Value**

Reference Name: R.0.2x4.24

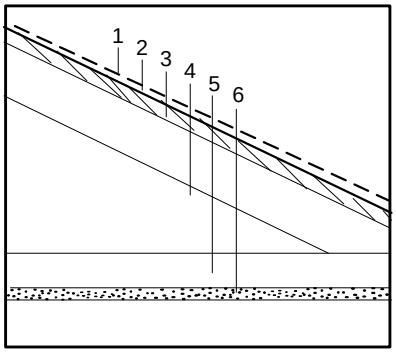

Sketch of Construction Assembly

Assembly Type: (check one)
- ___ Floor
- ___ Wall
- ✓ Ceiling/Roof

Framing Material: Wood

Framing Size: 2 × 4

Framing Spacing: 24 "o.c.

Framing Percentage: (check one)

Wall:	___	15% (16"o.c.)
	___	12% (24"o.c.)
	___	9% (48"o.c.)
Floor/Ceiling	___	10% (16"o.c.)
	✓	7% (24"o.c.)
	___	4% (48"o.c.)

Wall Weight / sf: (Packages only) NA

List of Construction Components		R-Value: Cavity (R_c)	R-Value: Frame (R_f)
	Outside Surface Air Film	0.170	0.170
1.	Asphalt shingle roofing	0.440	0.440
2.	Building paper (felt)	0.060	0.060
3.	0.50 in plywood	0.620	0.620
4.	3.5" & greater air space; heat sidways	0.800	0.800
5.	2x4 in fir framing	-----	3.465
6.	0.50 in gypsum or plaster board	0.450	0.450
7.			
	Inside Surface Air Film	0.610	0.610
	Total Unadjusted R-Values:	3.150	6.615
		R_c	R_f

Framing Adjustment Calculation:

$$\left[\left(\frac{1/3.150}{1 \div R_c}\right) \times \left(\frac{1-7/100}{1-(Fr.\% \div 100)}\right)\right] + \left[\left(\frac{1/6.615}{1 \div R_f}\right) \times \left(\frac{7/100}{Fr.\% \div 100}\right)\right] = \boxed{0.306}$$

Total U-Value

$$\frac{1/0.306}{1 \div \text{Total U-Value}} = 3.268$$

Total R-Value

Reference Name: R.0.S2X4.24

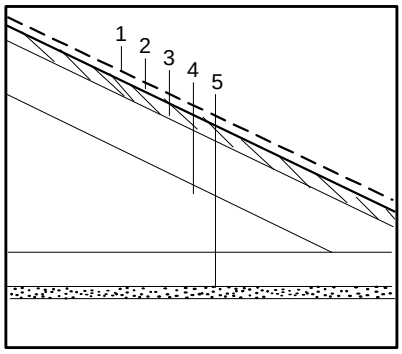

Sketch of Construction Assembly

Assembly Type: (check one)
- ___ Floor
- ___ Wall
- ✓ Ceiling/Roof

Framing Material: Metal

Framing Spacing: 24 "o.c.

Framing Size:
- Actual Depth: 3.625
- Actual Width: 1.625

Cavity Insulation:
- R-value: 0.800
- Knock-out (%): 15.00
- Web Thickness: 0.060

Insulation Tape R-value:
- Interior Flange: ___
- Exterior Flange: ___

List of Construction Components		R-Value
	Outside Surface Air Film	0.170
1.	Asphalt shingle	0.440
2.	Building paper (felt)	0.060
3.	0.50 in plywood	0.630
4.	3.5" & greater air space; heat sidways	0.800
5.	0.50 in gypsum or plaster board	0.450
6.		
7.		
	Inside Surface Air Film	0.610

Calculation:

From EZFRAME = $\boxed{0.316}$

Total U-Value

$$\frac{1/0.316}{1 \div \text{Total U-Value}} = 3.160$$

Total R-Value

Reference Name: R.11.2x6.16

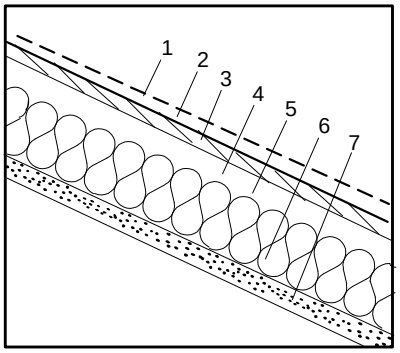

Sketch of Construction Assembly

Assembly Type: (check one)
- ___ Floor
- ___ Wall
- ✓ Ceiling/Roof

Framing Material: Wood

Framing Size: 2 × 6

Framing Spacing: 16 "o.c.

Framing Percentage: (check one)

Wall:	___	15% (16"o.c.)
	___	12% (24"o.c.)
	___	9% (48"o.c.)
Floor/Ceiling	✓	10% (16"o.c.)
	___	7% (24"o.c.)
	___	4% (48"o.c.)

Wall Weight / sf: NA
(Packages only)

List of Construction Components		R-Value: Cavity (R_c)	R-Value: Frame (R_f)
	Outside Surface Air Film	0.170	0.170
1.	Asphalt shingle roofing	0.440	0.440
2.	Building paper (felt)	0.060	0.060
3.	0.50 in plywood	0.620	0.620
4.	2.0 in air space; heat flow up	0.780	-----
5.	2X6 in fir framing	-----	5.445
6.	R-11 fiberglass insulation	11.000	-----
7.	0.50 in gypsum or plaster board	0.450	0.450
	Inside Surface Air Film	0.610	0.610
	Total Unadjusted R-Values:	14.130	7.795
		R_c	R_f

Framing Adjustment Calculation:

$$\left[\left(\frac{1/14.130}{1 \div R_c}\right) \times \left(\frac{1-10/100}{1-(\text{Fr.\%} \div 100)}\right)\right] + \left[\left(\frac{1/7.795}{1 \div R_f}\right) \times \left(\frac{10/100}{\text{Fr.\%} \div 100}\right)\right] = \boxed{0.077}$$

Total U-Value

$$\frac{1/0.077}{1 \div \text{Total U-Value}} = 12.987$$

Total R-Value

Reference Name: R.11.S2X6.16

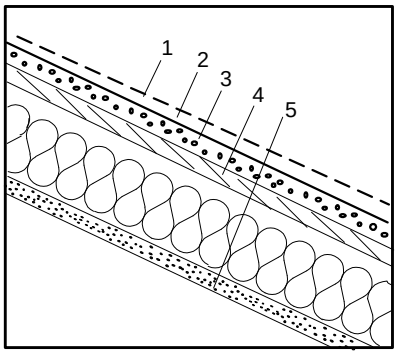

Sketch of Construction Assembly

Assembly Type: (check one)
- ___ Floor
- ___ Wall
- ✓ Ceiling/Roof

Framing Material: Metal

Framing Spacing: 16 "o.c.

Framing Size:
- Actual Depth: 6.000
- Actual Width: 1.625

Cavity Insulation:
- R-value: 11.800
- Knock-out (%): 15.000
- Web Thickness: 0.060

Insulation Tape R-value:
- Interior Flange: ___
- Exterior Flange: ___

List of Construction Components		R-Value
	Outside Surface Air Film	0.170
1.	Asphalt shingle	0.440
2.	Building paper (felt)	0.060
3.	0.75 in Polyisocyanurate	5.250
4.	0.625 in Plywood	0.780
5.	0.50 in gypsum or plaster board	0.450
6.		
7.		
	Inside Surface Air Film	0.620

Calculation:

From EZFRAME = $\boxed{0.071}$

Total U-Value

$$\frac{1/0.071}{1 \div \text{Total U-Value}} = 14.060$$

Total R-Value

Reference Name: R.11.2x4.24

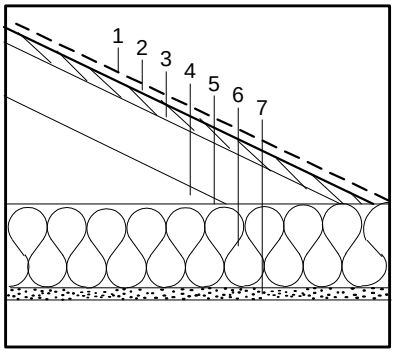

Sketch of Construction Assembly

Assembly Type: (check one)
- ___ Floor
- ___ Wall
- ✓ Ceiling/Roof

Framing Material: Wood

Framing Size: 2 × 4

Framing Spacing: 24 "o.c.

Framing Percentage: (check one)
- Wall: ___ 15% (16"o.c.)
- ___ 12% (24"o.c.)
- ___ 9% (48"o.c.)
- Floor/Ceiling ___ 10% (16"o.c.)
- ✓ 7% (24"o.c.)
- ___ 4% (48"o.c.)

Wall Weight / sf: (Packages only) NA

List of Construction Components		R-Value: Cavity (R_c)	R-Value: Frame (R_f)
	Outside Surface Air Film	0.170	0.170
1.	Asphalt shingle roofing	0.440	0.440
2.	Building paper (felt)	0.060	0.060
3.	0.50 in plywood	0.620	0.620
4.	3.50 in & greater air space; heat flow up	0.800	0.800
5.	R-11 fiberglass insulation	11.000	-----
6.	2X4 in fir framing	-----	3.465
7.	0.50 in gypsum or plaster board	0.450	0.450
	Inside Surface Air Film	0.610	0.610
	Total Unadjusted R-Values:	14.150	6.615
		R_c	R_f

Framing Adjustment Calculation:

$$[(\frac{1}{14.150}) \times (\frac{1-7/100}{1-(Fr.\% \div 100)})] + [(\frac{1}{6.615}) \times (\frac{7/100}{Fr.\% \div 100})] = \boxed{0.077}$$

$1 \div R_c$ $1 \div R_f$

Total U-Value

$$\frac{1/0.077}{1 \div \text{Total U-Value}} = 12.987$$

Total R-Value

Reference Name: R.11.S2X4.24

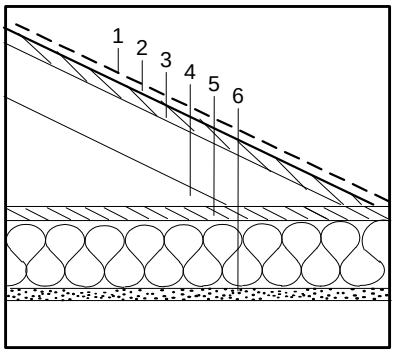

Sketch of Construction Assembly

Assembly Type: (check one)
- ___ Floor
- ___ Wall
- ✓ Ceiling/Roof

Framing Material: Metal

Framing Spacing: 24 "o.c.

Framing Size:
- Actual Depth 3.625
- Actual Width 1.625

Cavity Insulation:
- R-value 11.000
- Knock-out (%) 15.000
- Web Thickness 0.060

Insulation Tape R-value:
- Interior Flange ___
- Exterior Flange ___

List of Construction Components		R-Value
	Outside Surface Air Film	0.170
1.	Asphalt shingle	0.440
2.	Building paper (felt)	0.060
3.	0.50 in plywood	0.630
4.	3.50 in & greater air space; heat flow up	0.800
5.	0.75 in Polyisocyanurate	5.250
6.	0.50 in gypsum or plaster board	0.450
7.		
	Inside Surface Air Film	0.610

Calculation:

From EZFRAME = **0.069**

Total U-Value

$$\frac{1/0.069}{1 \div \text{Total U-Value}} = 14.500$$

Total R-Value

Reference Name: R.13.2x6.16

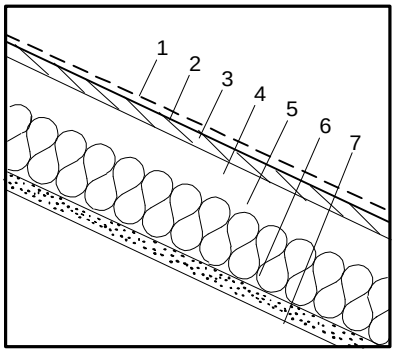

Sketch of Construction Assembly

Assembly Type: (check one)		Floor	
		Wall	
	✓	Ceiling/Roof	
Framing Material:	Wood		
Framing Size:	2 × 6		
Framing Spacing:	16	"o.c.	
Framing Percentage: (check one)	Wall:		15% (16"o.c.)
			12% (24"o.c.)
			9% (48"o.c.)
	Floor/Ceiling	✓	10% (16"o.c.)
			7% (24"o.c.)
			4% (48"o.c.)
Wall Weight / sf: (Packages only)	NA		

List of Construction Components		**R-Value** Cavity (R_c)	**R-Value** Frame (R_f)
	Outside Surface Air Film	0.170	0.170
1.	Asphalt shingle roofing	0.440	0.440
2.	Building paper (felt)	0.060	0.060
3.	0.50 in plywood	0.620	0.620
4.	2.0 in air space; heat flow up	0.780	-----
5.	2X6 in fir framing	-----	5.445
6.	R-13 fiberglass insulation	13.000	-----
7.	0.50 in gypsum or plaster board	0.450	0.450
	Inside Surface Air Film	0.610	0.610
	Total Unadjusted R-Values:	16.130	7.795
		R_c	R_f

Framing Adjustment Calculation:

$$[(\frac{1/16.130}{1 \div R_c}) \times (\frac{1-10/100}{1-(Fr.\% \div 100)})] + [(\frac{1/7.795}{1 \div R_f}) \times (\frac{10/100}{Fr.\% \div 100})] = \boxed{0.069}$$

Total U-Value

$$\frac{1/0.069}{1 \div \text{Total U-Value}} = \frac{14.493}{\textbf{Total R-Value}}$$

Reference Name: R.13.S2X6.16

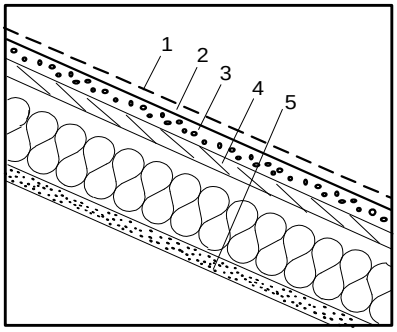

Sketch of Construction Assembly

Assembly Type: (check one)		Floor	
		Wall	
	✓	Ceiling/Roof	
Framing Material:	Metal		
Framing Spacing:	16	"o.c.	
Framing Size:	Actual Depth	6.00	
	Actual Width	1.625	
Cavity Insulation:	R-value	13.800	
	Knock-out (%)	15.000	
	Web Thickness	0.060	
Insulation Tape R-value:	Interior Flange		
	Exterior Flange		

List of Construction Components		**R-Value**
	Outside Surface Air Film	0.170
1.	Asphalt shingle	0.440
2.	Building paper (felt)	0.060
3.	1.00 in polyisocyanurate	7.000
4.	0.50 in plywood	0.630
5.	0.50 in gypsum or plaster board	0.450
6.		
7.		
	Inside Surface Air Film	0.620

Calculation:

From EZFRAME = **0.062**

Total U-Value

$$\frac{1/0.062}{1 \div \text{Total U-Value}} = \frac{16.130}{\textbf{Total R-Value}}$$

Reference Name: R.13.2x4.24

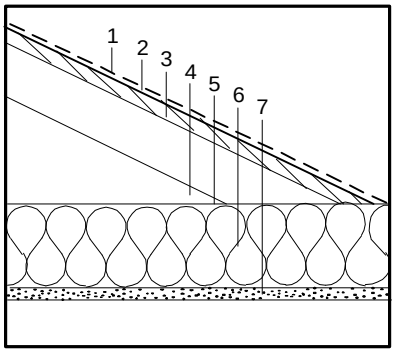

Sketch of Construction Assembly

Assembly Type: (check one)
- ___ Floor
- ___ Wall
- ✓ Ceiling/Roof

Framing Material: Wood

Framing Size: 2 × 4

Framing Spacing: 24 "o.c.

Framing Percentage: (check one)

Wall:	___	15% (16"o.c.)
	___	12% (24"o.c.)
	___	9% (48"o.c.)
Floor/Ceiling	___	10% (16"o.c.)
	✓	7% (24"o.c.)
	___	4% (48"o.c.)

Wall Weight / sf: (Packages only) NA

List of Construction Components		R-Value: Cavity (R_c)	R-Value: Frame (R_f)
	Outside Surface Air Film	0.170	0.170
1.	Asphalt shingle roofing	0.440	0.440
2.	Building paper (felt)	0.060	0.060
3.	0.50 in plywood	0.620	0.620
4.	3.50 in & greater air space; heat flow up	0.800	0.800
5.	R-13 fiberglass insulation	13.000	-----
6.	2X4 in fir framing	-----	3.465
7.	0.50 in gypsum or plaster board	0.450	0.450
	Inside Surface Air Film	0.610	0.610
	Total Unadjusted R-Values:	16.150	6.615
		R_c	R_f

Framing Adjustment Calculation:

$$\left[\left(\frac{1/16.150}{1 \div R_c}\right) \times \left(\frac{1-7/100}{1-(\text{Fr.\%} \div 100)}\right)\right] + \left[\left(\frac{1/6.615}{1 \div R_f}\right) \times \left(\frac{7/100}{\text{Fr.\%} \div 100}\right)\right] = \boxed{0.069}$$

Total U-Value

$$\frac{1/0.069}{1 \div \text{Total U-Value}} = 14.492$$

Total R-Value

Reference Name: R.13.S2X4.24

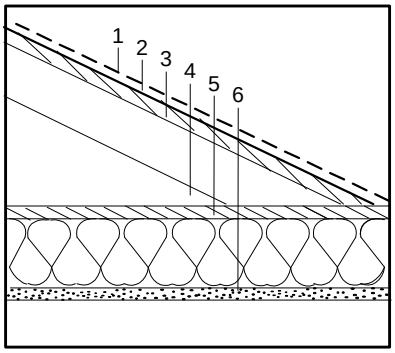

Sketch of Construction Assembly

Assembly Type: (check one)
- ___ Floor
- ___ Wall
- ✓ Ceiling/Roof

Framing Material: Metal

Framing Spacing: 24 "o.c.

Framing Size:
- Actual Depth: 3.625
- Actual Width: 1.625

Cavity Insulation:
- R-value: 13.000
- Knock-out (%): 15.000
- Web Thickness: 0.060

Insulation Tape R-value:
- Interior Flange: ___
- Exterior Flange: ___

List of Construction Components		R-Value
	Outside Surface Air Film	0.170
1.	Asphalt shingle	0.440
2.	Building paper (felt)	0.060
3.	0.50 in plywood	0.630
4.	3.50 in & greater air space; heat flow up	0.800
5.	0.75 in Polyisocyanurate	5.250
6.	0.50 in gypsum or plaster board	0.450
7.		
	Inside Surface Air Film	0.610

Calculation:

From EZFRAME = $\boxed{0.066}$

Total U-Value

$$\frac{1/0.066}{1 \div \text{Total U-Value}} = 15.100$$

Total R-Value

Reference Name: RP.14.2x4.48

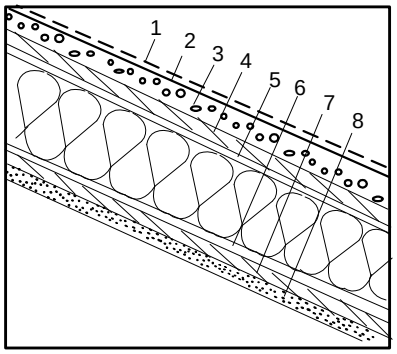

Sketch of Construction Assembly

Assembly Type: (check one)
- ___ Floor
- ___ Wall
- ✓ Ceiling/Roof

Framing Material: Wood

Framing Size: 2 × 4

Framing Spacing: 48 "o.c.

Framing Percentage: (check one)

Wall:	___	15% (16"o.c.)
	___	12% (24"o.c.)
	___	9% (48"o.c.)
Floor/Ceiling	___	10% (16"o.c.)
	___	7% (24"o.c.)
	✓	4% (48"o.c.)

Wall Weight / sf: NA
(Packages only)

List of Construction Components		**R-Value** Cavity (R_c)	Frame (R_f)
	Outside Surface Air Film	0.170	0.170
1.	Asphalt shingle roofing	0.440	0.440
2.	Building paper (felt)	0.060	0.060
3.	0.375 in plywood	0.470	0.470
4.	7/8 in furring channel	0.800	0.800
5.	2X4 in fir framing	-----	3.465
6.	3 5/8 in EPS foam insulation	13.956	-----
7.	7/8 in furring channel	0.800	0.800
8.	0.375 in plywood	0.470	0.470
9.	0.50 in gypsum or plaster board	0.450	0.450
	Inside Surface Air Film	0.610	0.610
	Total Unadjusted R-Values:	18.226	7.735
		R_c	R_f

Framing Adjustment Calculation:

$$[(\underset{1 \div R_c}{1/18.226}) \times (\underset{1-(Fr.\% \div 100)}{1-4/100})] + [(\underset{1 \div R_f}{1/7.735}) \times (\underset{Fr.\% \div 100}{4/100})] = \boxed{0.058}$$

Total U-Value

$$\underset{1 \div \text{Total U-Value}}{1/0.058} = \underset{\textbf{Total R-Value}}{17.288}$$

Reference Name: RP.14.S2x4.48

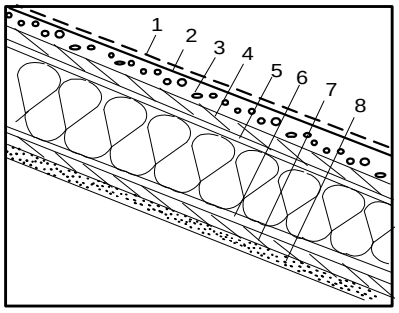

Sketch of Construction Assembly

Assembly Type: (check one)
- ___ Floor
- ___ Wall
- ✓ Ceiling/Roof

Framing Material: Metal

Framing Spacing: 48 "o.c.

Framing Size:
- Actual Depth: 3.625
- Actual Width: 1.625

Cavity Insulation:
- R-value: 14.000
- Knock-out (%): 15.000
- Web Thickness: 0.060

Insulation Tape R-value:
- Interior Flange: ___
- Exterior Flange: ___

List of Construction Components		**R-Value**
	Outside Surface Air Film	0.170
1.	Asphalt shingle	0.440
2.	Building paper	0.060
3.	3/4 in polyisocyanurate	5.250
4.	3/8 in plywood	0.470
5.	7/8 in furring channel	0.800
6.	7/8 in furring channel	0.800
7.	3/8 in plywood	0.800
8.	1/2 in gypsum or plaster board	0.470
	Inside Surface Air Film	0.620

Calculation:

From EZFRAME = $\boxed{0.055}$

Total U-Value

$$\underset{1 \div \text{Total U-Value}}{1/0.055} = \underset{\textbf{Total R-Value}}{18.130}$$

Reference Name: R.19.2x8.16

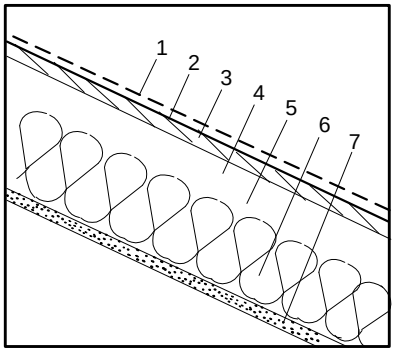

Sketch of Construction Assembly

Assembly Type: (check one)
- ___ Floor
- ___ Wall
- ✓ Ceiling/Roof

Framing Material: Wood

Framing Size: 2 × 8

Framing Spacing: 16 "o.c.

Framing Percentage: (check one)

Wall:	___	15% (16"o.c.)
	___	12% (24"o.c.)
	___	9% (48"o.c.)
Floor/Ceiling	✓	10% (16"o.c.)
	___	7% (24"o.c.)
	___	4% (48"o.c.)

Wall Weight / sf: NA
(Packages only)

List of Construction Components		R-Value: Cavity (R_c)	R-Value: Frame (R_f)
	Outside Surface Air Film	0.170	0.170
1.	Asphalt shingle roofing	0.440	0.440
2.	Building paper (felt)	0.060	0.060
3.	0.50 in plywood	0.620	0.620
4.	1.0 in air space; heat flow up	0.760	-----
5.	2X8 in fir framing	-----	7.175
6.	R-19 fiberglass insulation	19.000	-----
7.	0.50 in gypsum or plaster board	0.450	0.450
	Inside Surface Air Film	0.610	0.610
	Total Unadjusted R-Values:	22.110	9.528
		R_c	R_f

Framing Adjustment Calculation:

$$[(\frac{1/22.110}{1 \div R_c}) \times (\frac{1-10/100}{1-(Fr.\% \div 100)})] + [(\frac{1/9.528}{1 \div R_f}) \times (\frac{10/100}{Fr.\% \div 100})] = \boxed{0.051}$$

Total U-Value

$$\frac{1/0.051}{1 \div \text{Total U-Value}} = 19.608$$

Total R-Value

Reference Name: R.19.S2x8.16

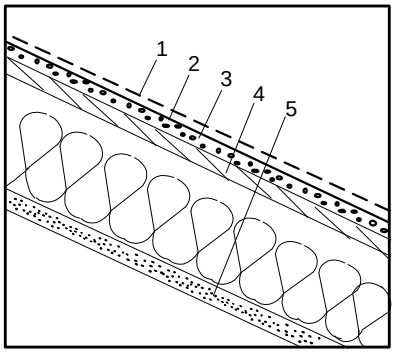

Sketch of Construction Assembly

Assembly Type: (check one)
- ___ Floor
- ___ Wall
- ✓ Ceiling/Roof

Framing Material: Metal

Framing Spacing: 16 "o.c.

Framing Size:

Actual Depth	8.000
Actual Width	1.625

Cavity Insulation:

R-value	19.800
Knock-out (%)	15.00
Web Thickness	0.060

Insulation Tape R-value:

Interior Flange	
Exterior Flange	

List of Construction Components		R-Value
	Outside Surface Air Film	0.170
1.	Asphalt Shingle	0.440
2.	Building Paper	0.060
3.	1.25 in Polyisocyanurate	8.750
4.	0.5 in plywood	0.630
5.	0.50 in Gypsum board	0.450
6.		
7.		
	Inside Surface Air Film	0.620

Calculation:

From EZFRAME = $\boxed{0.051}$

Total U-Value

$$\frac{1/0.051}{1 \div \text{Total U-Value}} = 19.760$$

Total R-Value

Reference Name: R.19.2x4.24

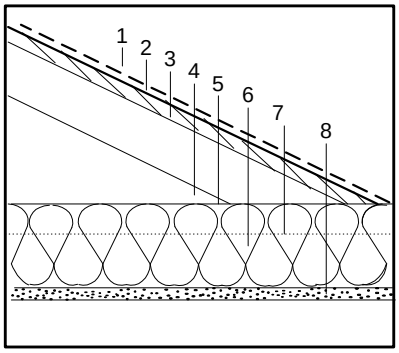

Sketch of Construction Assembly

Assembly Type: (check one)
- ___ Floor
- ___ Wall
- ✓ Ceiling/Roof

Framing Material: Wood

Framing Size: 2 × 4

Framing Spacing: 24 "o.c.

Framing Percentage: (check one)

Wall:	___	15% (16"o.c.)
	___	12% (24"o.c.)
	___	9% (48"o.c.)
Floor/Ceiling	___	10% (16"o.c.)
	✓	7% (24"o.c.)
	___	4% (48"o.c.)

Wall Weight / sf: (Packages only) NA

List of Construction Components		R-Value: Cavity (R_c)	R-Value: Frame (R_f)
	Outside Surface Air Film	0.170	0.170
1.	0.875 in stucco	0.440	0.440
2.	Building paper (felt)	0.060	0.060
3.	0.50 in plywood	0.620	0.620
4.	3.50 in & greater air space; heat flow up	0.800	0.800
5.	R-8 fiberglass insulation	8.000	8.000
6.	R-11 fiberglass insulation	11.000	-----
7.	2X4 in fir framing	------	3.465
8.	0.50 in gypsum or plaster board	0.450	0.450
	Inside Surface Air Film	0.610	0.610
	Total Unadjusted R-Values:	22.150 (R_c)	14.615 (R_f)

Framing Adjustment Calculation:

$$[(\underset{1\div R_c}{\underline{1/22.15}}) \times (\underset{1-(Fr.\%\div 100)}{\underline{1-7/100}})] + [(\underset{1\div R_f}{\underline{1/14.615}}) \times (\underset{Fr.\%\div 100}{\underline{7/100}})] = \boxed{0.047}$$

Total U-Value

$$\frac{1/0.047}{1\div \text{Total U-Value}} = \underset{\textbf{Total R-Value}}{21.277}$$

Reference Name: R.19.S2x4.24

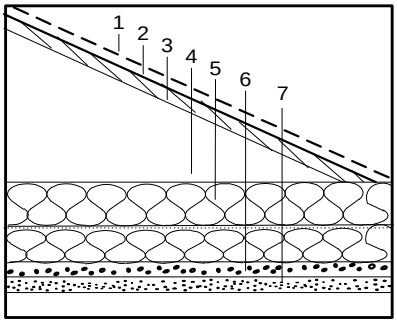

Sketch of Construction Assembly

Assembly Type: (check one)
- ___ Floor
- ___ Wall
- ✓ Ceiling/Roof

Framing Material: Metal

Framing Spacing: 24 "o.c.

Framing Size:
- Actual Depth: 3.625
- Actual Width: 1.625

Cavity Insulation:
- R-value: 11.000
- Knock-out (%): 15.000
- Web Thickness: 0.060

Insulation Tape R-value:
- Interior Flange: ___
- Exterior Flange: ___

List of Construction Components		R-Value
	Outside Surface Air Film	0.170
1.	Asphalt Roofing	0.150
2.	Building paper (felt)	0.060
3.	0.625 in Plywood	0.780
4.	3.5 in Air, Ceiling	0.800
5.	R-8 fiberglass insulation	8.000
6.	3/4 in polyisocyanurate	5.250
7.	0.50 in Gypsum board	0.450
	Inside Surface Air Film	0.610

Calculation:

From EZFRAME = **0.044**

Total U-Value

$$\frac{1/0.044}{1\div \text{Total U-Value}} = \underset{\textbf{Total R-Value}}{22.670}$$

Reference Name: R.22.2x10.16

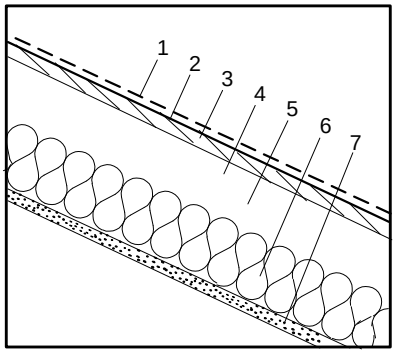

Sketch of Construction Assembly

Assembly Type: (check one)
- ___ Floor
- ___ Wall
- ✓ Ceiling/Roof

Framing Material: Wood

Framing Size: 2 × 10

Framing Spacing: 16 "o.c.

Framing Percentage: (check one)

Wall:	___	15% (16"o.c.)
	___	12% (24"o.c.)
	___	9% (48"o.c.)
Floor/Ceiling	✓	10% (16"o.c.)
	___	7% (24"o.c.)
	___	4% (48"o.c.)

Wall Weight / sf: NA
(Packages only)

List of Construction Components		R-Value: Cavity (R_c)	R-Value: Frame (R_f)
	Outside Surface Air Film	0.170	0.170
1.	0.875 in stucco	0.440	0.440
2.	Building paper (felt)	0.060	0.060
3.	3.5" & greater air space; heat sidways	0.620	0.620
4.	2x4 in fir framing	0.790	-----
5.	0.50 in gypsum or plaster board	-----	9.158
6.		22.000	-----
7.		0.450	0.450
	Inside Surface Air Film	0.610	0.610
	Total Unadjusted R-Values:	25.140	11.058
		R_c	R_f

Framing Adjustment Calculation:

$$\left[\left(\frac{1}{1+R_c}\right) \times \left(\frac{1-10/100}{1-(Fr.\%\div 100)}\right)\right] + \left[\left(\frac{1}{1+R_f}\right) \times \left(\frac{10/100}{Fr.\%\div 100}\right)\right] = \boxed{0.045}$$

Total U-Value

$$\frac{1/0.045}{1\div \text{Total U-Value}} = 22.22$$

Total R-Value

Reference Name: R.22.S2x10.16

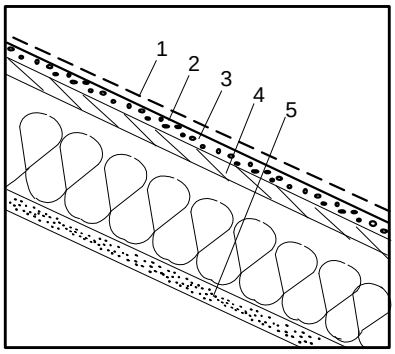

Sketch of Construction Assembly

Assembly Type: (check one)
- ___ Floor
- ___ Wall
- ✓ Ceiling/Roof

Framing Material: Metal

Framing Spacing: 16 "o.c.

Framing Size:
- Actual Depth: 10.000
- Actual Width: 1.625

Cavity Insulation:
- R-value: 22.800
- Knock-out (%): 15.000
- Web Thickness: 0.060

Insulation Tape R-value:
- Interior Flange: ___
- Exterior Flange: ___

List of Construction Components		R-Value
	Outside Surface Air Film	0.170
1.	Asphalt Paper	0.440
2.	Building paper (felt)	0.060
3.	1.50 in polyisocyanurate	10.500
4.	0.50 in Plywood	0.630
5.	0.50 in gypsum or plaster board	0.450
6.		
7.		
	Inside Surface Air Film	0.620

Calculation:

From EZFRAME = $\boxed{0.044}$

Total U-Value

$$\frac{1/0.044}{1\div \text{Total U-Value}} = 22.660$$

Total R-Value

Reference Name: R.22.2x4.24

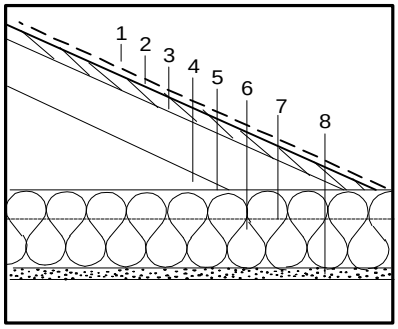

Sketch of Construction Assembly

Assembly Type: (check one)
- ___ Floor
- ___ Wall
- ✓ Ceiling/Roof

Framing Material: Wood

Framing Size: 2 × 4

Framing Spacing: 24 "o.c.

Framing Percentage: (check one)

Wall:	___	15% (16"o.c.)
	___	12% (24"o.c.)
	___	9% (48"o.c.)
Floor/Ceiling	___	10% (16"o.c.)
	✓	7% (24"o.c.)
	___	4% (48"o.c.)

Wall Weight / sf: (Packages only) NA

List of Construction Components		R-Value: Cavity (R_c)	R-Value: Frame (R_f)
	Outside Surface Air Film	0.170	0.170
1.	Asphalt shingle rofing	0.440	0.440
2.	Building paper (felt)	0.060	0.060
3.	0.50 in plywood	0.620	0.620
4.	3.50 in & greater air space	0.800	0.800
5.	R-11 fiberglass insulation	11.000	11.000
6.	R-11 fiberglass insulation	11.000	-----
7.	2X4 in fir framing	-----	3.465
8.	0.50 in gypsum or plaster board	0.450	0.450
	Inside Surface Air Film	0.610	0.610
	Total Unadjusted R-Values:	25.150	17.615
		R_c	R_f

Framing Adjustment Calculation:

$$\left[\left(\frac{1/25.15}{1 \div R_c}\right) \times \left(\frac{1-7/100}{1-(Fr.\% \div 100)}\right)\right] + \left[\left(\frac{1/17.615}{1 \div R_f}\right) \times \left(\frac{7/100}{Fr.\% \div 100}\right)\right] = \boxed{0.041}$$

Total U-Value

$$\frac{1/0.041}{1 \div \text{Total U-Value}} = 24.390$$

Total R-Value

Reference Name: R.22.S2x4.24

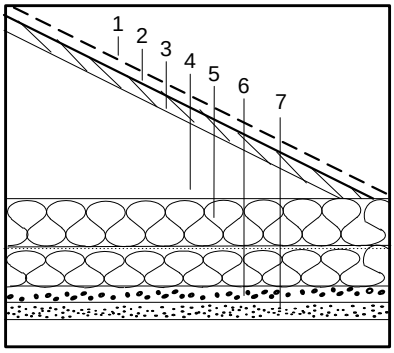

Sketch of Construction Assembly

Assembly Type: (check one)
- ___ Floor
- ___ Wall
- ✓ Ceiling/Roof

Framing Material: Metal

Framing Spacing: 24 "o.c.

Framing Size:
- Actual Depth: 3.625
- Actual Width: 1.625

Cavity Insulation:
- R-value: 11.000
- Knock-out (%): 15.000
- Web Thickness: 0.060

Insulation Tape R-value:
- Interior Flange: ___
- Exterior Flange: ___

List of Construction Components		R-Value
	Outside Surface Air Film	0.170
1.	Asphalt shingle rofing	0.440
2.	Building paper (felt)	0.060
3.	0.50 in plywood	0.630
4.	3.50 in & greater air space	0.800
5.	R-11 fiberglass insulation	11.000
6.	0.75 in Polyisocyanurate	5.250
7.	0.50 in Gypsum Board	0.450
	Inside Surface Air Film	0.610

Calculation:

From EZFRAME = **0.039**

Total U-Value

$$\frac{1/0.039}{1 \div \text{Total U-Value}} = 25.500$$

Total R-Value

Reference Name: RP.22.2x6.48

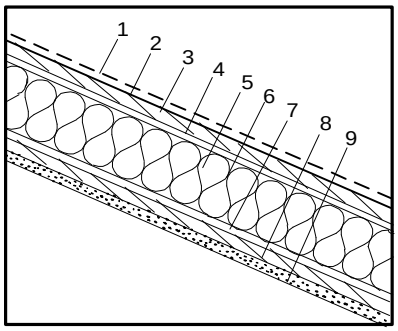

Sketch of Construction Assembly

Assembly Type: (check one)
- ___ Floor
- ___ Wall
- ✓ Ceiling/Roof

Framing Material: Wood

Framing Size: 2 × 6

Framing Spacing: 48 "o.c.

Framing Percentage: (check one)

Wall:	___	15% (16"o.c.)
	___	12% (24"o.c.)
	___	9% (48"o.c.)
Floor/Ceiling	___	10% (16"o.c.)
	___	7% (24"o.c.)
	✓	4% (48"o.c.)

Wall Weight / sf: (Packages only) NA

	List of Construction Components	R-Value Cavity (R_c)	R-Value Frame (R_f)
	Outside Surface Air Film	0.170	0.170
1.	Asphalt shingle roofing	0.440	0.440
2.	Building paper (felt)	0.060	0.060
3.	0.375 in plywood	0.470	0.800
4.	0.875 in furring channel	0.800	0.800
5.	5 5/8 in EPS foam insulation	21.656	-----
6.	2X6 in fir framing	-----	5.445
7.	0.875 in furring channel	0.800	0.800
8.	0.375 in plywood	0.470	0.470
9.	0.50 in gypsum or plaster board	0.450	0.450
	Inside Surface Air Film	0.610	0.610
	Total Unadjusted R-Values:	25.926	10.045
		R_c	R_f

Framing Adjustment Calculation:

$$[(\frac{1}{1 \div R_c}) \times (\frac{1-4/100}{1-(Fr.\% \div 100)})] + [(\frac{1}{1 \div R_f}) \times (\frac{4/100}{Fr.\% \div 100})] = \boxed{0.041}$$

Total U-Value

$$\frac{1/0.041}{1 \div \text{Total U-Value}} = 24.384$$

Total R-Value

Reference Name: RP.22.S2x6.48

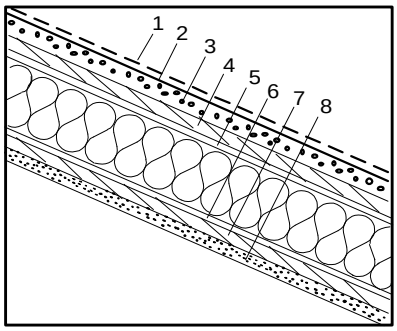

Sketch of Construction Assembly

Assembly Type: (check one)
- ___ Floor
- ___ Wall
- ✓ Ceiling/Roof

Framing Material: Metal

Framing Spacing: 48 "o.c.

Framing Size:
- Actual Depth: 6.000
- Actual Width: 1.625

Cavity Insulation:
- R-value: 22.000
- Knock-out (%): 15.000
- Web Thickness: 0.060

Insulation Tape R-value:
- Interior Flange: ___
- Exterior Flange: ___

	List of Construction Components	R-Value
	Outside Surface Air Film	0.170
1.	Asphalt Shingle	0.440
2.	Building paper (felt)	0.060
3.	1.00 in polyisocyanurate	7.000
4.	0.375 in Plywood	0.470
5.	0.875 in furring channel	0.800
6.	0.875 in furring channel	0.800
7.	0.375 in Plywood	0.470
8.	0.50 in gypsum or plaster board	0.450
	Inside Surface Air Film	0.620

Calculation:

From EZFRAME = **0.039**

Total U-Value

$$\frac{1/0.039}{1 \div \text{Total U-Value}} = 25.460$$

Total R-Value

Reference Name: RP.28.2x8.48

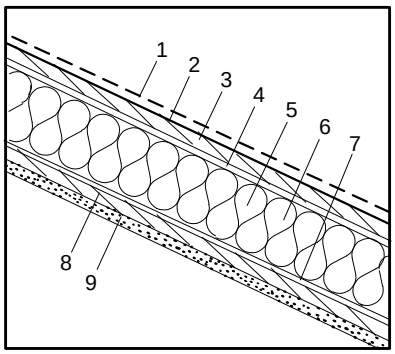

Sketch of Construction Assembly

Assembly Type: (check one)		Floor	
		Wall	
	✓	Ceiling/Roof	
Framing Material:	Wood		
Framing Size:	2 × 8		
Framing Spacing:	48	"o.c.	
Framing Percentage: (check one)	Wall:		15% (16"o.c.)
			12% (24"o.c.)
			9% (48"o.c.)
	Floor/Ceiling		10% (16"o.c.)
			7% (24"o.c.)
		✓	4% (48"o.c.)
Wall Weight / sf: (Packages only)	NA		

List of Construction Components		**R-Value** Cavity (R_c)	**R-Value** Frame (R_f)
	Outside Surface Air Film	0.170	0.170
1.	Asphalt shingle roofing	0.440	0.440
2.	Building paper (felt)	0.060	0.060
3.	0.375 in plywood	0.470	0.470
4.	0.875 in furring channel	0.800	0.800
5.	7 3/8 in EPS foam insulation @ R-3.85/in	28.394	-----
6.	2X8 in fir framing	-----	7.178
7.	0.875 in furring channel	0.800	0.800
8.	0.375 in plywood	0.470	0.470
9.	0.50 in gypsum or plaster board	0.450	0.450
	Inside Surface Air Film	0.610	0.610
	Total Unadjusted R-Values:	32.664	11.448
		R_c	R_f

Framing Adjustment Calculation:

[(1/32.664) × (1-4/100)] + [(1/11.448) × (4/100)] = **0.033**

($1 \div R_c$) (1-(Fr.% ÷100)) ($1 \div R_f$) (Fr.% ÷100) — **Total U-Value**

1/0.033 (1÷Total U-Value) = 30.410 **Total R-Value**

Reference Name: RP.28.S2x8.48

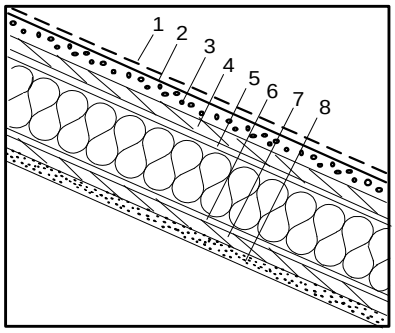

Sketch of Construction Assembly

Assembly Type: (check one)		Floor	
		Wall	
	✓	Ceiling/Roof	
Framing Material:	Metal		
Framing Spacing:	48	"o.c.	
Framing Size:	Actual Depth		8.000
	Actual Width		1.625
Cavity Insulation:	R-value		28.394
	Knock-out (%)		15.000
	Web Thickness		0.060
Insulation Tape R-value:	Interior Flange		
	Exterior Flange		

List of Construction Components		**R-Value**
	Outside Surface Air Film	0.170
1.	Asphalt Shingle	0.440
2.	Building paper (felt)	0.060
3.	1.75 in polyisocyanurate	12.250
4.	0.375 in Plywood	0.470
5.	0.875 in furring channel	0.800
6.	0.875 in furring channel	0.800
7.	0.375 in Plywood	0.470
8.	0.50 in gypsum or plaster board	0.450
	Inside Surface Air Film	0.620

Calculation:

From EZFRAME = **0.031** **Total U-Value**

1/0.031 (1÷Total U-Value) = 31.940 **Total R-Value**

Reference Name: R.30.2x12.16

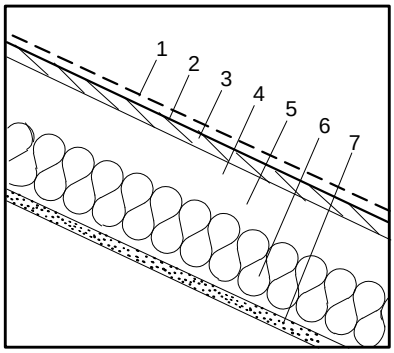

Sketch of Construction Assembly

Assembly Type: (check one)
- ___ Floor
- ___ Wall
- ✓ Ceiling/Roof

Framing Material: Wood

Framing Size: 2 × 12

Framing Spacing: 16 "o.c.

Framing Percentage: (check one)

Wall:	___	15% (16"o.c.)
	___	12% (24"o.c.)
	___	9% (48"o.c.)
Floor/Ceiling	✓	10% (16"o.c.)
	___	7% (24"o.c.)
	___	4% (48"o.c.)

Wall Weight / sf: (Packages only) NA

List of Construction Components		**R-Value** Cavity (R_c)	**R-Value** Frame (R_f)
	Outside Surface Air Film	0.170	0.170
1.	Asphalt shingle roofing	0.440	0.440
2.	Building paper (felt)	0.060	0.060
3.	0.50 in plywood	0.620	0.620
4.	1.75 in air space; heat fow up	0.780	-----
5.	2X12 in fir framing	-----	11.138
6.	R-30 fiberglass insulation	30.000	-----
7.	0.50 in gypsum or plaster board	0.450	0.450
	Inside Surface Air Film	0.610	0.610
	Total Unadjusted R-Values:	33.130	13.488
		R_c	R_f

Framing Adjustment Calculation:

$$[(\underset{1\div R_c}{1/33.130}) \times (\underset{1-(Fr.\%\div 100)}{1-10/100})] + [(\underset{1\div R_f}{1/13.488}) \times (\underset{Fr.\%\div 100}{10/100})] = \boxed{0.034}$$

Total U-Value

$$\underset{1\div \text{Total U-Value}}{1/0.034} = \underset{\textbf{Total R-Value}}{29.412}$$

Reference Name: R.30.S2x12.16

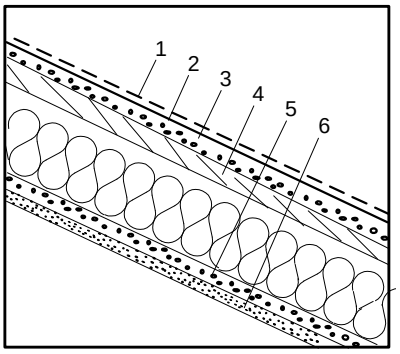

Sketch of Construction Assembly

Assembly Type: (check one)
- ___ Floor
- ___ Wall
- ✓ Ceiling/Roof

Framing Material: Metal

Framing Spacing: 16 "o.c.

Framing Size:
- Actual Depth: 12.00
- Actual Width: 1.625

Cavity Insulation:
- R-value: 30.8
- Knock-out (%): 15.00
- Web Thickness: 0.060

Insulation Tape R-value:
- Interior Flange: ___
- Exterior Flange: ___

List of Construction Components		**R-Value**
	Outside Surface Air Film	0.170
1.	Asphalt shingle	0.440
2.	Building Paper	0.060
3.	1.50 in Polyisocyanurate	10.50
4.	0.50 in plywood	0.62
5.	1.00 in Polyisocyanurate	7.00
6.	0.50 in gypsum or plaster board	0.45
7.		
	Inside Surface Air Film	0.620

Calculation:

From EZFRAME = **0.032**

Total U-Value

$$\underset{1\div \text{Total U-Value}}{1/0.032} = \underset{\textbf{Total R-Value}}{31.64}$$

Reference Name: R.30.2x10.16

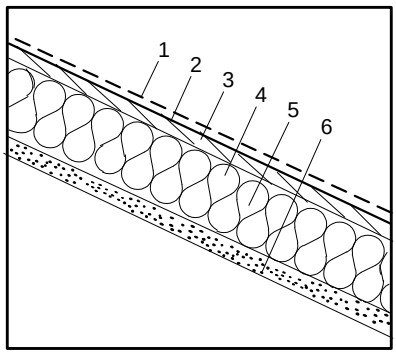

Sketch of Construction Assembly

Assembly Type: (check one)
- ___ Floor
- ___ Wall
- ✓ Ceiling/Roof

Framing Material: Wood

Framing Size: 2 × 10

Framing Spacing: 16 "o.c.

Framing Percentage: (check one)

Wall:	___	15% (16"o.c.)
	___	12% (24"o.c.)
	___	9% (48"o.c.)
Floor/Ceiling	✓	10% (16"o.c.)
	___	7% (24"o.c.)
	___	4% (48"o.c.)

Wall Weight / sf: (Packages only) NA

List of Construction Components		**R-Value** Cavity (R_c)	**R-Value** Frame (R_f)
	Outside Surface Air Film	0.170	0.170
1.	Asphalt shingle roofing	0.440	0.440
2.	Building paper (felt)	0.060	0.060
3.	0.50 in plywood	0.620	0.620
4.	2x10 in fir framing	-----	9.158
5.	R-30c fiberglass insulation (8.5'' thkns)	30.000	-----
6.	0.50 in gypsum or plaster board	0.450	0.450
7.			
	Inside Surface Air Film	0.610	0.610
	Total Unadjusted R-Values:	32.350 (R_c)	11.508 (R_f)

Framing Adjustment Calculation:

$$[(\underset{1\div R_c}{1/32.350}) \times (\underset{1-(Fr.\%\div 100)}{1-10/100})] + [(\underset{1\div R_f}{1/11.508}) \times (\underset{Fr.\%\div 100}{10/100})] = \boxed{0.036}$$

Total U-Value

$$\underset{1\div \text{Total U-Value}}{1/0.036} = \underset{\textbf{Total R-Value}}{27.778}$$

Reference Name: R.30.S2x10.16

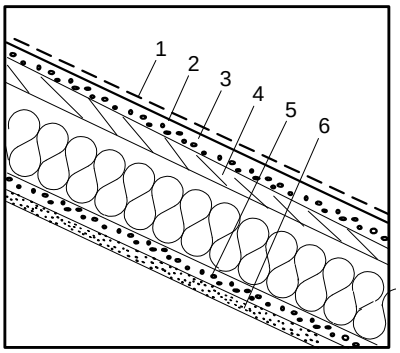

Sketch of Construction Assembly

Assembly Type: (check one)
- ___ Floor
- ___ Wall
- ✓ Ceiling/Roof

Framing Material: Metal

Framing Spacing: 16 "o.c.

Framing Size:
- Actual Depth: 10.00
- Actual Width: 1.625

Cavity Insulation:
- R-value: 30.80
- Knock-out (%): 15.00
- Web Thickness: 0.060

Insulation Tape R-value:
- Interior Flange: ___
- Exterior Flange: ___

List of Construction Components		**R-Value**
	Outside Surface Air Film	0.170
1.	Asphalt shingle	0.440
2.	Building Paper	0.060
3.	1.50 in Polyisocyanurate	10.50
4.	0.50 in plywood	0.62
5.	0.75 in Polyisocyanurate	5.25
6.	0.50 in gypsum or plaster board	0.45
7.		
	Inside Surface Air Film	0.620

Calculation:

From EZFRAME = **0.034**

Total U-Value

$$\underset{1\div \text{Total U-Value}}{1/0.034} = \underset{\textbf{Total R-Value}}{29.220}$$

Reference Name: R.30.2x4.24

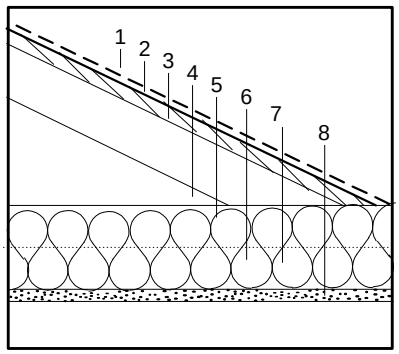

Sketch of Construction Assembly

Assembly Type: (check one)
- ___ Floor
- ___ Wall
- ✓ Ceiling/Roof

Framing Material: Wood

Framing Size: 2 × 4

Framing Spacing: 24 "o.c.

Framing Percentage: (check one)

Wall:	___	15% (16"o.c.)
	___	12% (24"o.c.)
	___	9% (48"o.c.)
Floor/Ceiling	___	10% (16"o.c.)
	✓	7% (24"o.c.)
	___	4% (48"o.c.)

Wall Weight / sf: (Packages only) NA

List of Construction Components		R-Value: Cavity (R_c)	R-Value: Frame (R_f)
	Outside Surface Air Film	0.170	0.170
1.	Asphalt shingle roofing	0.440	0.440
2.	Building paper (felt)	0.060	0.060
3.	0.50 in plywood	0.620	0.620
4.	3.50 in & greater air space	0.800	0.800
5.	R-19 fiberglass insulation	19.000	19.000
6.	R-11 fiberglass insulation	11.000	-----
7.	2X4 in fir framing	-----	3.465
8.	0.50 in gypsum or plaster board	0.450	0.450
	Inside Surface Air Film	0.610	0.610
	Total Unadjusted R-Values:	33.150	25.615
		R_c	R_f

Framing Adjustment Calculation:

$$[(\frac{1}{33.150}) \times (\frac{1-7/100}{1-(Fr.\% \div 100)})] + [(\frac{1}{25.615}) \times (\frac{7/100}{Fr.\% \div 100})] = \boxed{0.031}$$

R_c: 1÷R_c; R_f: 1÷R_f

Total U-Value

$$\frac{1/0.031}{1 \div \text{Total U-Value}} = 32.481$$

Total R-Value

Reference Name: R.30.S2x4.24

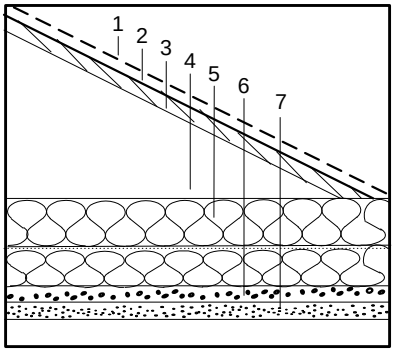

Sketch of Construction Assembly

Assembly Type: (check one)
- ___ Floor
- ___ Wall
- ✓ Ceiling/Roof

Framing Material: Metal

Framing Spacing: 24 "o.c.

Framing Size:

Actual Depth	3.625
Actual Width	1.625

Cavity Insulation:

R-value	11.00
Knock-out (%)	15.00
Web Thickness	0.060

Insulation Tape R-value:

Interior Flange	
Exterior Flange	

List of Construction Components		R-Value
	Outside Surface Air Film	0.170
1.	Asphalt shingle rofing	0.440
2.	Building paper (felt)	0.060
3.	0.50 in plywood	0.630
4.	3.50 in & greater air space	0.800
5.	R-19 fiberglass insulation	19.000
6.	0.75 in Polyisocyanurate	5.250
7.	0.50 in Gypsum Board	0.450
	Inside Surface Air Film	0.680

Calculation:

From EZFRAME = **0.030**

Total U-Value

$$\frac{1/0.030}{1 \div \text{Total U-Value}} = 33.52$$

Total R-Value

Reference Name: RP.35.2x10.48

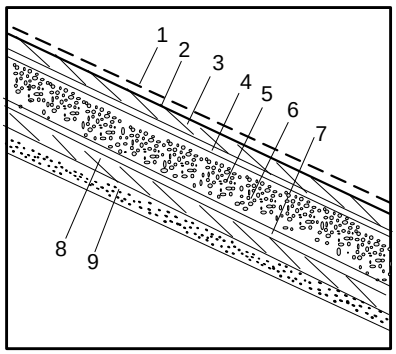

Sketch of Construction Assembly

Assembly Type: (check one)		Floor	
		Wall	
	✓	Ceiling/Roof	
Framing Material:	Wood		
Framing Size:	2 × 10		
Framing Spacing:	48	"o.c.	
Framing Percentage: (check one)	Wall:		15% (16"o.c.)
			12% (24"o.c.)
			9% (48"o.c.)
	Floor/Ceiling		10% (16"o.c.)
			7% (24"o.c.)
		✓	4% (48"o.c.)
Wall Weight / sf: (Packages only)	NA		

List of Construction Components		**R-Value** Cavity (R_c)	Frame (R_f)
	Outside Surface Air Film	0.170	0.170
1.	Asphalt shingle roofing	0.440	0.440
2.	Building paper (felt)	0.060	0.060
3.	0.375 in plywood	0.470	0.470
4.	0.875 furring channel	0.800	0.800
5.	4 in EPS foam insulation	35.000	-----
6.	2x10 in fir framing	-----	9.158
7.	0.875 furring channel	0.800	0.800
8.	0.375 in plywood	0.470	0.470
9.	0.50 in gypsum or plaster board	0.450	0.450
	Inside Surface Air Film	0.610	0.610
	Total Unadjusted R-Values:	39.270	13.426
		R_c	R_f

Framing Adjustment Calculation:

$$[(\frac{1}{1 \div R_c}) \times (\frac{1-4/100}{1-(Fr.\% \div 100)})] + [(\frac{1}{1 \div R_f}) \times (\frac{4/100}{Fr.\% \div 100})] = \boxed{0.027}$$

Total U-Value

$$\frac{1/0.027}{1 \div \text{Total U-Value}} = 37.037$$

Total R-Value

Reference Name: RP.35.S2x10.48

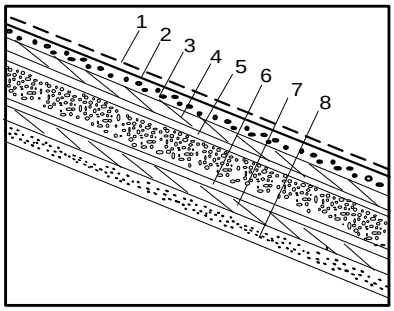

Sketch of Construction Assembly

Assembly Type: (check one)		Floor	
		Wall	
	✓	Ceiling/Roof	
Framing Material:	Metal		
Framing Spacing:	48	"o.c.	
Framing Size:	Actual Depth		10.000
	Actual Width		1.625
Cavity Insulation:	R-value		35.000
	Knock-out (%)		15.000
	Web Thickness		0.060
Insulation Tape R-value:	Interior Flange		
	Exterior Flange		

List of Construction Components		**R-Value**
	Outside Surface Air Film	0.170
1.	Asphalt shingle roofing	0.440
2.	Building paper (felt)	0.060
3.	2.25 in polyisocyanurate	15.750
4.	0.375 in plywood	0.470
5.	0.875 in furring channel	0.800
6.	0.875 in furring channel	0.800
7.	0.375 in plywood	0.470
8.	0.50 in gypsum or plaster board	0.450
	Inside Surface Air Film	0.680

Calculation:

From EZFRAME = $\boxed{0.026}$

Total U-Value

$$\frac{1/0.026}{1 \div \text{Total U-Value}} = 38.44$$

Total R-Value

Reference Name: R.38.2x14.16

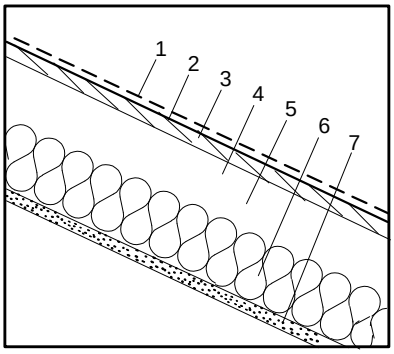

Sketch of Construction Assembly

Assembly Type: (check one)
- ___ Floor
- ___ Wall
- ✓ Ceiling/Roof

Framing Material: Wood

Framing Size: 2 × 14

Framing Spacing: 16 "o.c.

Framing Percentage: (check one)

Wall:	___	15% (16"o.c.)
	___	12% (24"o.c.)
	___	9% (48"o.c.)
Floor/Ceiling	✓	10% (16"o.c.)
	___	7% (24"o.c.)
	___	4% (48"o.c.)

Wall Weight / sf: NA (Packages only)

List of Construction Components		R-Value: Cavity (R_c)	R-Value: Frame (R_f)
	Outside Surface Air Film	0.170	0.170
1.	Asphalt shingle roofing	0.440	0.440
2.	Building paper (felt)	0.060	0.060
3.	0.50 in plywood	0.620	0.620
4.	1.25 in air space; heat flow up	0.760	-----
5.	2X14 in fir framing	-----	13.118
6.	R-38 fiberglass insulation	38.000	-----
7.	0.50 in gypsum or plaster board	0.450	0.450
	Inside Surface Air Film	0.610	0.610
	Total Unadjusted R-Values:	41.110 (R_c)	15.468 (R_f)

Framing Adjustment Calculation:

$$[(\frac{1}{41.110}) \times (\frac{1-10}{100})] + [(\frac{1}{15.468}) \times (\frac{10}{100})] = \boxed{0.028}$$

($1 \div R_c$; 1-(Fr.% ÷100); $1 \div R_f$; Fr.% ÷100)

Total U-Value

$$\frac{1/0.028}{1 \div \text{Total U-Value}} = 35.714$$

Total R-Value

Reference Name: R.38.S2x14.16

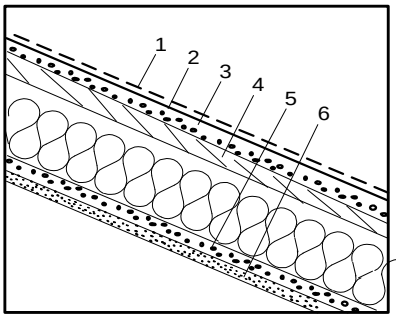

Sketch of Construction Assembly

Assembly Type: (check one)
- ___ Floor
- ___ Wall
- ✓ Ceiling/Roof

Framing Material: Metal

Framing Spacing: 16 "o.c.

Framing Size:
- Actual Depth: 14.000
- Actual Width: 1.625

Cavity Insulation:
- R-value: 38.800
- Knock-out (%): 15.00
- Web Thickness: 0.060

Insulation Tape R-value:
- Interior Flange: ___
- Exterior Flange: ___

List of Construction Components		R-Value
	Outside Surface Air Film	0.170
1.	Asphalt Shingle	0.440
2.	Building paper (felt)	0.060
3.	1.50 in Polyisocyanurate	10.500
4.	0.50 in Plywood	0.630
5.	1.50 in Polyisocyanurate	10.500
6.	0.50 in gypsum or plaster board	0.450
7.		
	Inside Surface Air Film	0.620

Calculation:

From EZFRAME = **0.027**

Total U-Value

$$\frac{1/0.027}{1 \div \text{Total U-Value}} = 36.95$$

Total R-Value

Reference Name: R.38.2x12.16

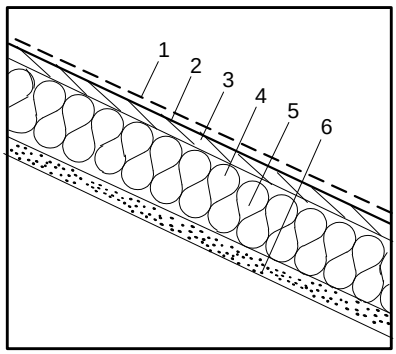

Sketch of Construction Assembly

Assembly Type: (check one)
- ___ Floor
- ___ Wall
- ✓ Ceiling/Roof

Framing Material: **Wood**

Framing Size: 2 × 12

Framing Spacing: 16 "o.c.

Framing Percentage: (check one)

Wall:	___	15% (16"o.c.)
	___	12% (24"o.c.)
	___	9% (48"o.c.)
Floor/Ceiling	✓	10% (16"o.c.)
	___	7% (24"o.c.)
	___	4% (48"o.c.)

Wall Weight / sf: NA
(Packages only)

List of Construction Components		**R-Value** Cavity (R_c)	**R-Value** Frame (R_f)
	Outside Surface Air Film	0.170	0.170
1.	Asphalt shingle roofing	0.440	0.440
2.	Building paper (felt)	0.060	0.060
3.	0.50 in plywood	0.620	0.620
4.	2X12 in fir framing	-----	11.138
5.	R-38 fiberglass insulation	37.000	-----
6.	0.50 in gypsum or plaster board	0.450	0.450
7.			
	Inside Surface Air Film	0.610	0.610
	Total Unadjusted R-Values:	39.350	13.488
		R_c	R_f

Framing Adjustment Calculation:

$$[(\underset{1\div R_c}{1/39.350}) \times (\underset{1-(Fr.\%\div 100)}{1-10/100})] + [(\underset{1\div R_f}{1/13.488}) \times (\underset{Fr.\%\div 100}{10/100})] = \boxed{0.030}$$

Total U-Value

$$\frac{1/0.030}{1\div \text{Total U-Value}} = 33.333$$

Total R-Value

Reference Name: R.38.S2x12.16

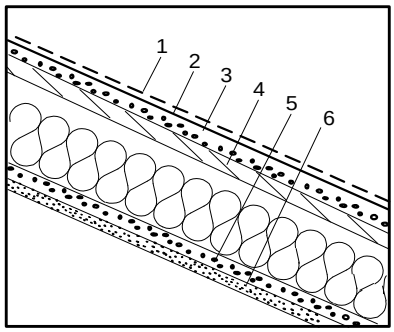

Sketch of Construction Assembly

Assembly Type: (check one)
- ___ Floor
- ___ Wall
- ✓ Ceiling/Roof

Framing Material: **Metal**

Framing Spacing: 16 "o.c.

Framing Size:
- Actual Depth: 12.000
- Actual Width: 1.625

Cavity Insulation:
- R-value: 38.800
- Knock-out (%): 15.000
- Web Thickness: 0.060

Insulation Tape R-value:
- Interior Flange: ___
- Exterior Flange: ___

List of Construction Components		**R-Value**
	Outside Surface Air Film	0.170
1.	Asphalt Shingle	0.440
2.	Building paper (felt)	0.060
3.	1.50 in polyisocyanurate	10.50
4.	0.625 in plywood	0.780
5.	1.00 in polyisocyanurate	7.00
6.	0.625 in gypsum or plaster board	0.560
7.		
	Inside Surface Air Film	0.620

Calculation:

From EZFRAME = **0.030**

Total U-Value

$$\frac{1/0.030}{1\div \text{Total U-Value}} = 33.38$$

Total R-Value

Reference Name: R.38.2x4.24

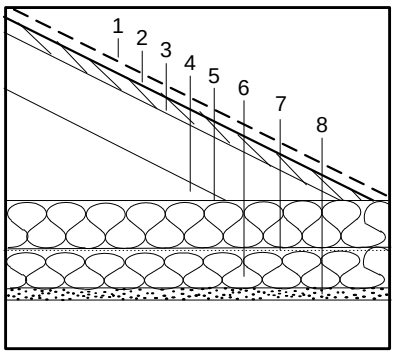

Sketch of Construction Assembly

Assembly Type: (check one)
- ___ Floor
- ___ Wall
- ✓ Ceiling/Roof

Framing Material: Wood

Framing Size: 2 × 4

Framing Spacing: 24 "o.c.

Framing Percentage: (check one)

Wall:	___	15% (16"o.c.)
	___	12% (24"o.c.)
	___	9% (48"o.c.)
Floor/Ceiling	___	10% (16"o.c.)
	✓	7% (24"o.c.)
	___	4% (48"o.c.)

Wall Weight / sf: NA
(Packages only)

List of Construction Components		R-Value: Cavity (R_c)	R-Value: Frame (R_f)
	Outside Surface Air Film	0.170	0.170
1.	Asphalt shingle roofing	0.440	0.440
2.	Building paper (felt)	0.060	0.060
3.	0.50 in plywood	0.620	0.620
4.	3.50 in & greater air space; heat flow up	0.800	0.800
5.	R-27 fiberglass insulation	27.000	27.000
6.	R-11 fiberglass insulation	11.000	-----
7.	2X4 in fir framing	-----	3.465
8.	0.50 in gypsum or plaster board	0.450	0.450
	Inside Surface Air Film	0.610	0.610
	Total Unadjusted R-Values:	41.150	33.615
		R_c	R_f

Framing Adjustment Calculation:

$$[(\frac{1}{41.150}) \times (\frac{1-7/100}{1-(Fr.\% \div 100)})] + [(\frac{1}{33.615}) \times (\frac{7/100}{Fr.\% \div 100})] = \boxed{0.024}$$

Total U-Value

$$\frac{1/0.024}{1 \div \text{Total U-Value}} = 41.667$$

Total R-Value

Reference Name: R.38.S2x4.24

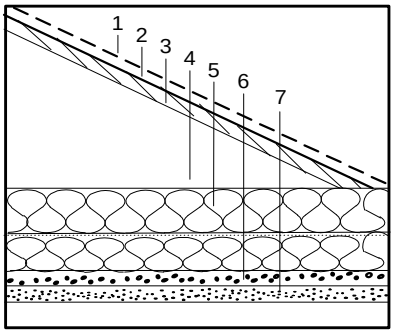

Sketch of Construction Assembly

Assembly Type: (check one)
- ___ Floor
- ___ Wall
- ✓ Ceiling/Roof

Framing Material: Metal

Framing Spacing: 24 "o.c.

Framing Size:

Actual Depth	3.625
Actual Width	1.625

Cavity Insulation:

R-value	11.00
Knock-out (%)	15.000
Web Thickness	0.060

Insulation Tape R-value:

Interior Flange	___
Exterior Flange	___

List of Construction Components		R-Value
	Outside Surface Air Film	0.170
1.	Asphalt Shingle	0.440
2.	Building paper (felt)	0.060
3.	0.50 in Plywood	0.630
4.	3.50 in & greater air space; heat flow up	0.800
5.	R-27 fiberglass insulation	27.00
6.	1.00 in polyisocyanurate	7.00
7.	0.50 in gypsum or plaster board	0.450
	Inside Surface Air Film	0.610

Calculation:

From EZFRAME = **0.023**

Total U-Value

$$\frac{1/0.023}{1 \div \text{Total U-Value}} = 43.25$$

Total R-Value

Reference Name: R.49.2x4.16

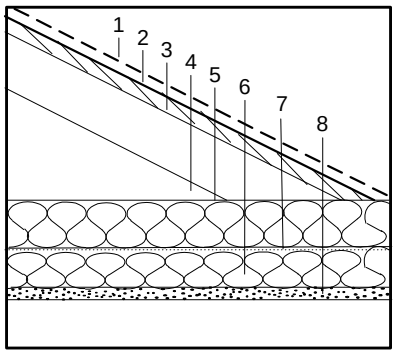

Sketch of Construction Assembly

Assembly Type: (check one)
- ___ Floor
- ___ Wall
- ✓ Ceiling/Roof

Framing Material: **Wood**

Framing Size: 2 × 4

Framing Spacing: 16 "o.c.

Framing Percentage: (check one)

Wall:	___	15% (16"o.c.)
	___	12% (24"o.c.)
	___	9% (48"o.c.)
Floor/Ceiling	✓	10% (16"o.c.)
	___	7% (24"o.c.)
	___	4% (48"o.c.)

Wall Weight / sf: (Packages only) NA

List of Construction Components		**R-Value** Cavity (R_c)	**R-Value** Frame (R_f)
	Outside Surface Air Film	0.170	0.170
1.	Asphalt shingle roofing	0.440	0.440
2.	Building paper (felt)	0.060	0.060
3.	0.50 in plywood	0.620	0.620
4.	3.50 in & greater air space; heat flow up	0.800	0.800
5.	R-38 fiberglass insulation	38.000	38.000
6.	R-11 fiberglass insulation	11.000	-----
7.	2X4 in fir framing	-----	3.465
8.	0.50 in gypsum or plaster board	0.450	0.450
	Inside Surface Air Film	0.610	0.610
	Total Unadjusted R-Values:	52.150	44.615
		R_c	R_f

Framing Adjustment Calculation:

$$[(\frac{1}{52.150}) \times (\frac{1-10/100}{1-(Fr.\% \div 100)})] + [(\frac{1}{44.615}) \times (\frac{10/100}{Fr.\% \div 100})] = \boxed{0.019}$$

$1 \div R_c$ $\quad$ $1 \div R_f$

Total U-Value

$$\frac{1/0.019}{1 \div \text{Total U-Value}} = 52.632$$

Total R-Value

Reference Name: R.49.S2x4.16

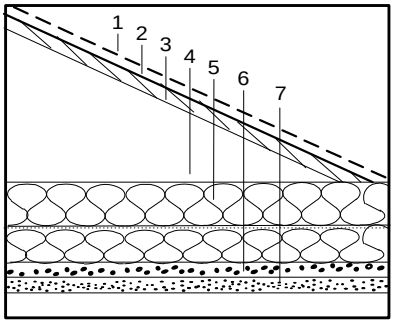

Sketch of Construction Assembly

Assembly Type: (check one)
- ___ Floor
- ___ Wall
- ✓ Ceiling/Roof

Framing Material: **Metal**

Framing Spacing: 16 "o.c.

Framing Size:	Actual Depth	3.625
	Actual Width	1.625
Cavity Insulation:	R-value	11.00
	Knock-out (%)	15.00
	Web Thickness	0.060
Insulation Tape R-value:	Interior Flange	
	Exterior Flange	

List of Construction Components		**R-Value**
	Outside Surface Air Film	0.170
1.	Asphalt shingle	0.440
2.	0.50 in plywood	0.630
3.	3.50 in air space	0.800
4.	R-38 fiberglass insulation	38.00
5.	1.00 in polyisocyanurate	7.000
6.	0.50 in gypsum or plaster board	0.450
7.		
	Inside Surface Air Film	0.610

Calculation:

From EZFRAME = $\boxed{0.019}$

Total U-Value

$$\frac{1/0.019}{1 \div \text{Total U-Value}} = 53.02$$

Total R-Value

Reference Name: R.49.2x4.24

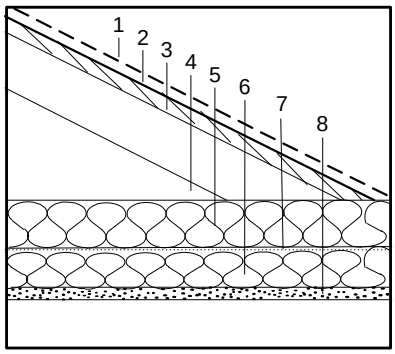

Sketch of Construction Assembly

Assembly Type: (check one)
- ____ Floor
- ____ Wall
- ✓ Ceiling/Roof

Framing Material: Wood

Framing Size: 2 × 4

Framing Spacing: 24 "o.c.

Framing Percentage: (check one)

Wall:	____	15% (16"o.c.)
	____	12% (24"o.c.)
	____	9% (48"o.c.)
Floor/Ceiling	____	10% (16"o.c.)
	✓	7% (24"o.c.)
	____	4% (48"o.c.)

Wall Weight / sf: NA
(Packages only)

List of Construction Components		R-Value: Cavity (R_c)	R-Value: Frame (R_f)
	Outside Surface Air Film	0.170	0.170
1.	Asphalt shingle roofing	0.440	0.440
2.	Building paper (felt)	0.060	0.060
3.	0.50 in plywood	0.620	0.620
4.	3.50 in & greater air space; heat flow up	0.800	0.800
5.	R-38 fiberglass insulation	38.000	38.000
6.	R-11 fiberglass insulation	11.000	-----
7.	2X4 in fir framing	-----	3.465
8.	0.50 in gypsum or plaster board	0.450	0.450
	Inside Surface Air Film	0.610	0.610
	Total Unadjusted R-Values:	52.150 (R_c)	44.615 (R_f)

Framing Adjustment Calculation:

$$\left[\left(\frac{1}{52.15}\right) \times \left(\frac{1-7/100}{1-(\text{Fr.\%} \div 100)}\right)\right] + \left[\left(\frac{1}{44.615}\right) \times \left(\frac{7/100}{\text{Fr.\%} \div 100}\right)\right] = \boxed{0.019}$$

$1 \div R_c$ $1 \div R_f$

Total U-Value

$$\frac{1/0.019}{1 \div \text{Total U-Value}} = 52.632$$

Total R-Value

Reference Name: R.49.S2x4.24

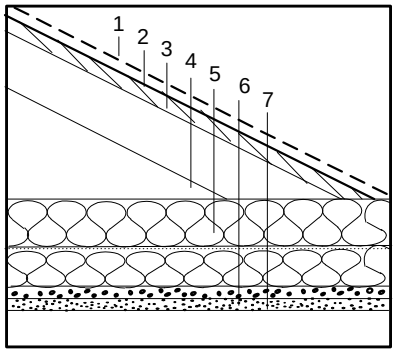

Sketch of Construction Assembly

Assembly Type: (check one)
- ____ Floor
- ____ Wall
- ✓ Ceiling/Roof

Framing Material: Metal

Framing Spacing: 24 "o.c.

Framing Size:

Actual Depth	3.625
Actual Width	1.625

Cavity Insulation:

R-value	11.00
Knock-out (%)	15.00
Web Thickness	0.060

Insulation Tape R-value:

Interior Flange	____
Exterior Flange	____

List of Construction Components		R-Value
	Outside Surface Air Film	0.170
1.	Asphalt Shingle	0.440
2.	Building paper (felt)	0.060
3.	0.50 in Plywood	0.630
4.	3.50 in & greater air space; heat flow up	0.800
5.	R-38 fiberglass insulation	38.000
6.	0.25 in Polyisocyanurate	1.750
7.	0.75 in gypsum or plaster board	0.680
	Inside Surface Air Film	0.610

Calculation:

From EZFRAME = **0.018**

Total U-Value

$$\frac{1/0.018}{1 \div \text{Total U-Value}} = 54.250$$

Total R-Value

Reference Name: FC.0.2x6.16

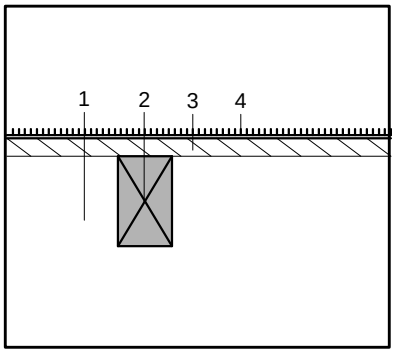

Sketch of Construction Assembly

Assembly Type: (check one)
- ✓ Floor
- Wall
- Ceiling/Roof

Framing Material: Wood

Framing Size: 2 × 6

Framing Spacing: 16 "o.c.

Framing Percentage: (check one)

Wall:		15% (16"o.c.)
		12% (24"o.c.)
		9% (48"o.c.)
Floor/Ceiling	✓	10% (16"o.c.)
		7% (24"o.c.)
		4% (48"o.c.)

Wall Weight / sf: NA (Packages only)

List of Construction Components		R-Value: Cavity (R_c)	R-Value: Frame (R_f)
	Outside Surface Air Film	0.170	0.170
1.	Effective R-value of vented crawlspace	6.000	6.000
2.	2X6 in fir framing	-----	5.445
3.	0.625 in plywood	0.770	0.770
4.	Carpet & Pad	2.080	2.080
5.			
6.			
7.			
	Inside Surface Air Film	0.920	0.920
	Total Unadjusted R-Values:	3.940	9.385
		R_c	R_f

Framing Adjustment Calculation:

$$[(\underset{1\div R_c}{\underline{1/9.940}}) \times (\underset{1-(Fr.\%\div 100)}{\underline{1-10/100}})] + [(\underset{1\div R_f}{\underline{1/15.385}}) \times (\underset{Fr.\%\div 100}{\underline{10/100}})] = \boxed{0.097}$$

Total U-Value

$$\underset{1\div \text{Total U-Value}}{\underline{1/0.097}} = \underset{\textbf{Total R-Value}}{\underline{10.309}}$$

Reference Name: FC.0.S2x6.16

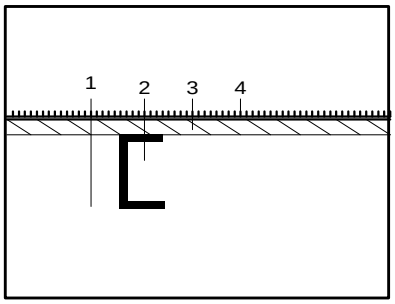

Sketch of Construction Assembly

Assembly Type: (check one)
- ✓ Floor
- Wall
- Ceiling/Roof

Framing Material: Metal

Framing Spacing: 16 "o.c.

Framing Size:
- Actual Depth: 6.000
- Actual Width: 1.625

Cavity Insulation:
- R-value: 0.800
- Knock-out (%): 15.000
- Web Thickness: 0.060

Insulation Tape R-value:
- Interior Flange:
- Exterior Flange:

List of Construction Components		R-Value
	Outside Surface Air Film	0.170
1.	Effective R-value of vented crawlspace	6.000
2.	0.625 in plywood	0.780
3.	Carpet & Pad	2.080
4.		
5.		
6.		
7.		
	Inside Surface Air Film	0.920

Calculation:

From EZFRAME = $\boxed{0.094}$

Total U-Value

$$\underset{1\div \text{Total U-Value}}{\underline{1/0.094}} = \underset{\textbf{Total R-Value}}{\underline{10.680}}$$

Reference Name: FX.0.2x6.16

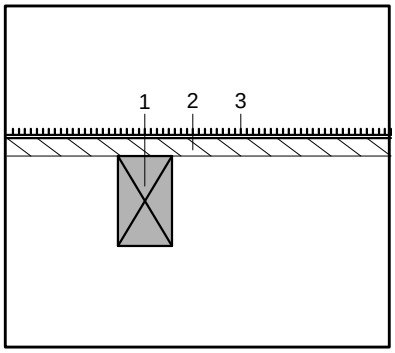

Sketch of Construction Assembly

Assembly Type: (check one)	✓	Floor	
		Wall	
		Ceiling/Roof	
Framing Material:	Wood		
Framing Size:	2 × 6		
Framing Spacing:	16	"o.c.	
Framing Percentage: (check one)	Wall:		15% (16"o.c.)
			12% (24"o.c.)
			9% (48"o.c.)
	Floor/Ceiling	✓	10% (16"o.c.)
			7% (24"o.c.)
			4% (48"o.c.)
Wall Weight / sf: (Packages only)	NA		

List of Construction Components		**R-Value** Cavity (R_c)	**R-Value** Frame (R_f)
	Outside Surface Air Film	0.170	0.170
1.	2X6 in fir framing	-----	5.445
2.	0.625 in plywood	0.770	0.770
3.	Carpet & Pad	2.080	2.080
4.			
5.			
6.			
7.			
	Inside Surface Air Film	0.920	0.920
	Total Unadjusted R-Values:	3.940	9.385
		R_c	R_f

Framing Adjustment Calculation:

[(1/3.940) × (1-10/100)] + [(1/9.385) × (10/100)] = **0.241**

($1 \div R_c$) (1-(Fr.% ÷100)) ($1 \div R_f$) (Fr.% ÷100) — **Total U-Value**

1/0.241 (1÷Total U-Value) = 4.150 **Total R-Value**

Reference Name: FX.0.S2x6.16

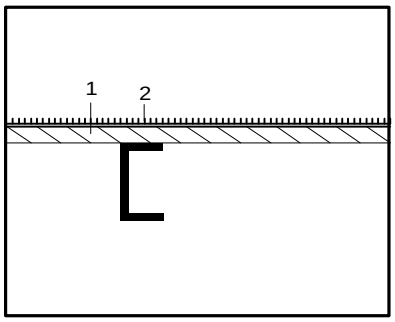

Sketch of Construction Assembly

Assembly Type: (check one)	✓	Floor	
		Wall	
		Ceiling/Roof	
Framing Material:	Metal		
Framing Spacing:	16	"o.c.	
Framing Size:	Actual Depth	6.000	
	Actual Width	1.625	
Cavity Insulation:	R-value	0.800	
	Knock-out (%)	15.000	
	Web Thickness	0.060	
Insulation Tape R-value:	Interior Flange		
	Exterior Flange		

List of Construction Components		**R-Value**
	Outside Surface Air Film	0.170
1.	0.625 in plywood	0.780
2.	Carpet & pad	2.08
3.		
4.		
5.		
6.		
7.		
	Inside Surface Air Film	0.920

Calculation:

From EZFRAME = **0.253** **Total U-Value**

1/0.253 (1÷Total U-Value) = 3.950 **Total R-Value**

Reference Name: FC.11.2x6.16

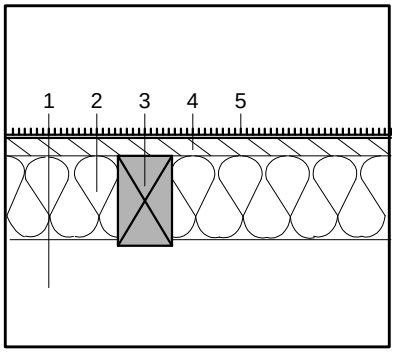

Sketch of Construction Assembly

Assembly Type: (check one)
- ✓ Floor
- Wall
- Ceiling/Roof

Framing Material: Wood

Framing Size: 2 × 6

Framing Spacing: 16 "o.c.

Framing Percentage: (check one)

Wall:		15% (16"o.c.)
		12% (24"o.c.)
		9% (48"o.c.)
Floor/Ceiling	✓	10% (16"o.c.)
		7% (24"o.c.)
		4% (48"o.c.)

Wall Weight / sf: NA (Packages only)

List of Construction Components		R-Value: Cavity (R_c)	R-Value: Frame (R_f)
	Outside Surface Air Film	0.170	0.170
1.	Effective R-value of vented crawlspace	6.000	6.000
2.	R-11 fiberglass insulation	11.000	-----
3.	2X6 in fir framing	-----	5.445
4.	0.625 in plywood	0.770	0.770
5.	Carpet & pad	2.080	2.080
6.			
7.			
	Inside Surface Air Film	0.920	0.920
	Total Unadjusted R-Values:	20.940 (R_c)	15.385 (R_f)

Framing Adjustment Calculation:

$$\left[\left(\frac{1/20.940}{1 \div R_c}\right) \times \left(\frac{1-10/100}{1-(Fr.\% \div 100)}\right)\right] + \left[\left(\frac{1/15.385}{1 \div R_f}\right) \times \left(\frac{10/100}{Fr.\% \div 100}\right)\right] = \boxed{0.050}$$

Total U-Value

$$\frac{1/0.050}{1 \div \text{Total U-Value}} = 20.00$$

Total R-Value

Reference Name: FC.11.S2x6.16

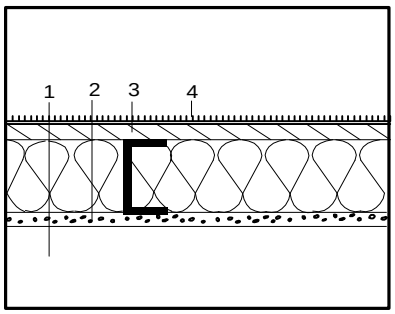

Sketch of Construction Assembly

Assembly Type: (check one)
- ✓ Floor
- Wall
- Ceiling/Roof

Framing Material: Metal

Framing Spacing: 16 "o.c.

Framing Size:
- Actual Depth: 6.000
- Actual Width: 1.625

Cavity Insulation:
- R-value: 11.000
- Knock-out (%): 15.000
- Web Thickness: 0.060

Insulation Tape R-value:
- Interior Flange:
- Exterior Flange:

List of Construction Components		R-Value
	Outside Surface Air Film	0.170
1.	Effective R-value of vented crawlspace	6.000
2.	0.75 in polyisocyanurate	5.250
3.	0.625 in plywood	0.780
4.	Carpet & pad	2.080
5.		
6.		
7.		
	Inside Surface Air Film	0.920

Calculation:

From EZFRAME = $\boxed{0.048}$

Total U-Value

$$\frac{1/0.048}{1 \div \text{Total U-Value}} = 21.030$$

Total R-Value

Reference Name: FX.11.2x6.16

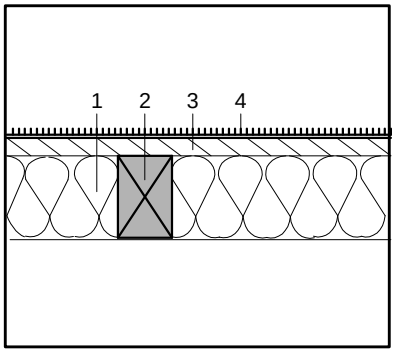

Sketch of Construction Assembly

Assembly Type: (check one)	✓	Floor	
		Wall	
		Ceiling/Roof	
Framing Material:	Wood		
Framing Size:	2 × 6		
Framing Spacing:	16	"o.c.	
Framing Percentage: (check one)	Wall:		15% (16"o.c.)
			12% (24"o.c.)
			9% (48"o.c.)
	Floor/Ceiling	✓	10% (16"o.c.)
			7% (24"o.c.)
			4% (48"o.c.)
Wall Weight / sf: (Packages only)	NA		

List of Construction Components		**R-Value** Cavity (R_c)	**R-Value** Frame (R_f)
	Outside Surface Air Film	0.170	0.170
1.	R-11 fiberglass insulation	11.000	-----
2.	2X6 in fir framing	-----	5.445
3.	0.625 in Plywood	0.770	0.770
4.	Carpet & pad	2.080	2.080
5.			
6.			
7.			
	Inside Surface Air Film	0.920	0.920
	Total Unadjusted R-Values:	14.940	9.385
		R_c	R_f

Framing Adjustment Calculation:

$$\left[\left(\frac{1/14.940}{1 \div R_c}\right) \times \left(\frac{1-10/100}{1-(\text{Fr.}\% \div 100)}\right)\right] + \left[\left(\frac{1/9.385}{1 \div R_f}\right) \times \left(\frac{10/100}{\text{Fr.}\% \div 100}\right)\right] = \boxed{0.071}$$

Total U-Value

$$\frac{1/0.071}{1 \div \text{Total U-Value}} = 14.085$$

Total R-Value

Reference Name: FX.11.S2x6.16

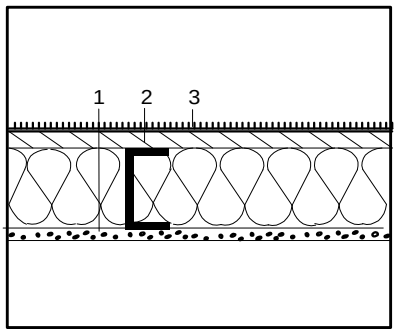

Sketch of Construction Assembly

Assembly Type: (check one)	✓	Floor	
		Wall	
		Ceiling/Roof	
Framing Material:	Metal		
Framing Spacing:	16	"o.c.	
Framing Size:	Actual Depth	6.000	
	Actual Width	1.625	
Cavity Insulation:	R-value	11.000	
	Knock-out (%)	15.000	
	Web Thickness	0.060	
Insulation Tape R-value:	Interior Flange		
	Exterior Flange		

List of Construction Components		**R-Value**
	Outside Surface Air Film	0.170
1.	0.75 in polyisocyanurate	5.250
2.	0.625 in plywood	0.780
3.	Carpert & pad	2.080
4.		
5.		
6.		
7.		
	Inside Surface Air Film	0.920

Calculation:

From EZFRAME = $\boxed{0.071}$

Total U-Value

$$\frac{1/0.071}{1 \div \text{Total U-Value}} = 14.16$$

Total R-Value

Reference Name: FC.13.2x6.16

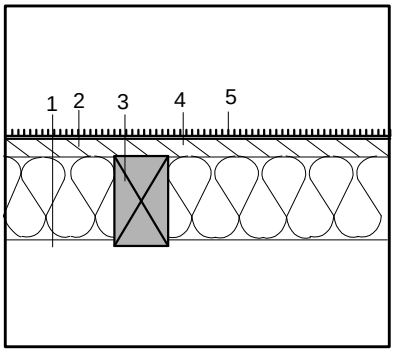

Sketch of Construction Assembly

Assembly Type: (check one)
- ✓ Floor
- Wall
- Ceiling/Roof

Framing Material: Wood

Framing Size: 2 × 6

Framing Spacing: 16 "o.c.

Framing Percentage: (check one)

Wall:		15% (16"o.c.)
		12% (24"o.c.)
		9% (48"o.c.)
Floor/Ceiling	✓	10% (16"o.c.)
		7% (24"o.c.)
		4% (48"o.c.)

Wall Weight / sf: NA
(Packages only)

List of Construction Components		R-Value: Cavity (R_c)	R-Value: Frame (R_f)
	Outside Surface Air Film	0.170	0.170
1.	Effective R-Value of vented crawlspace	6.000	6.000
2.	R-13 fiberglass insulation	13.000	-----
3.	2X6 in fir framing	-----	5.445
4.	0.625 in plywood	0.770	0.770
5.	Carpet & pad	2.080	2.080
6.			
7.			
	Inside Surface Air Film	0.920	0.920
	Total Unadjusted R-Values:	22.940	15.385
		R_c	R_f

Framing Adjustment Calculation:

$$[(\frac{1}{1 \div R_c}) \times (\frac{1-10/100}{1-(Fr.\% \div 100)})] + [(\frac{1}{1 \div R_f}) \times (\frac{10/100}{Fr.\% \div 100})] = \boxed{0.046}$$

Total U-Value

$$\frac{1/0.046}{1 \div \text{Total U-Value}} = \frac{21.740}{\textbf{Total R-Value}}$$

Reference Name: FC.13.S2x6.16

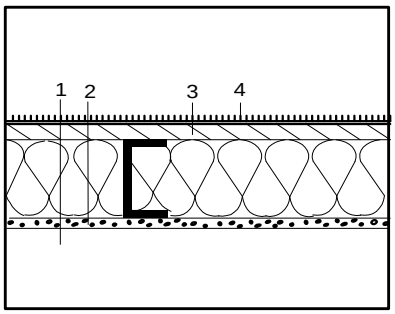

Sketch of Construction Assembly

Assembly Type: (check one)
- ✓ Floor
- Wall
- Ceiling/Roof

Framing Material: Metal

Framing Spacing: 16 "o.c.

Framing Size:

Actual Depth	6.000
Actual Width	1.625

Cavity Insulation:

R-value	13.000
Knock-out (%)	15.000
Web Thickness	0.060

Insulation Tape R-value:

Interior Flange	
Exterior Flange	

List of Construction Components		R-Value
	Outside Surface Air Film	0.170
1.	Effective R-Value of vented crawlspace	6.000
2.	1.00 in polyisocyanurate	7.000
3.	0.625 in plywood	0.780
4.	Carpet & pad	2.080
5.		
6.		
7.		
	Inside Surface Air Film	0.920

Calculation:

From EZFRAME = **0.043**

Total U-Value

$$\frac{1/0.043}{1 \div \text{Total U-Value}} = \frac{23.340}{\textbf{Total R-Value}}$$

Reference Name: FX.13.2x6.16

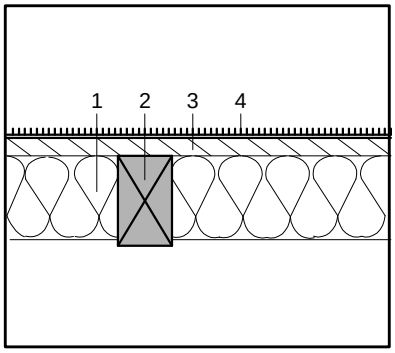

Sketch of Construction Assembly

Assembly Type: (check one)
- ✓ Floor
- Wall
- Ceiling/Roof

Framing Material: Wood

Framing Size: 2 × 6

Framing Spacing: 16 "o.c.

Framing Percentage: (check one)

Wall:		15% (16"o.c.)
		12% (24"o.c.)
		9% (48"o.c.)
Floor/Ceiling	✓	10% (16"o.c.)
		7% (24"o.c.)
		4% (48"o.c.)

Wall Weight / sf: NA (Packages only)

List of Construction Components		R-Value: Cavity (R_c)	R-Value: Frame (R_f)
	Outside Surface Air Film	0.170	0.170
1.	R-13 fiberglass insulation	13.000	-----
2.	2X6 in fir framing	-----	5.445
3.	0.625 in plywood	0.770	0.770
4.	Carpet & pad	2.080	2.080
5.			
6.			
7.			
	Inside Surface Air Film	0.920	0.920
	Total Unadjusted R-Values:	16.940	9.385
		R_c	R_f

Framing Adjustment Calculation:

$$[(\frac{1/16.940}{1 \div R_c}) \times (\frac{1-10/100}{1-(Fr.\% \div 100)})] + [(\frac{1/9.385}{1 \div R_f}) \times (\frac{10/100}{Fr.\% \div 100})] = \boxed{0.064}$$

Total U-Value

$$\frac{1/0.064}{1 \div \text{Total U-Value}} = \frac{15.625}{\text{Total R-Value}}$$

Reference Name: FX.13.S2x6.16

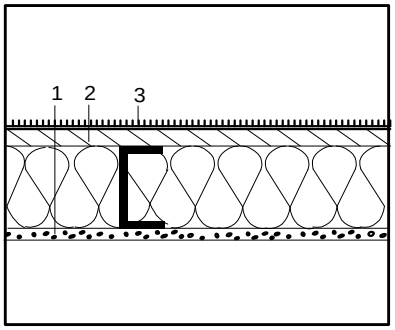

Sketch of Construction Assembly

Assembly Type: (check one)
- ✓ Floor
- Wall
- Ceiling/Roof

Framing Material: Metal

Framing Spacing: 16 "o.c.

Framing Size:
- Actual Depth: 6.000
- Actual Width: 1.625

Cavity Insulation:
- R-value: 13.000
- Knock-out (%): 15.000
- Web Thickness: 0.060

Insulation Tape R-value:
- Interior Flange:
- Exterior Flange:

List of Construction Components		R-Value
	Outside Surface Air Film	0.170
1.	1.00 in polyisocyanurate	7.000
2.	0.625 in plywood	0.780
3.	Carpet & pad	2.080
4.		
5.		
6.		
7.		
	Inside Surface Air Film	0.920

Calculation:

From EZFRAME = $\boxed{0.058}$

Total U-Value

$$\frac{1/0.058}{1 \div \text{Total U-Value}} = \frac{17.340}{\text{Total R-Value}}$$

Reference Name: FC.19.2x8.16

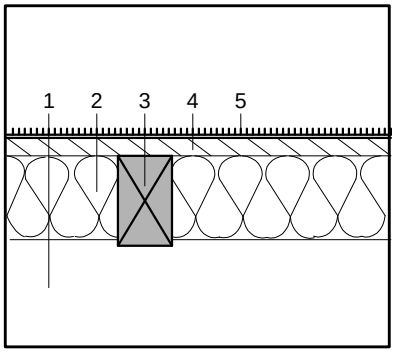

Sketch of Construction Assembly

Assembly Type: (check one)
- ✓ Floor
- Wall
- Ceiling/Roof

Framing Material: Wood

Framing Size: 2 × 8

Framing Spacing: 16 "o.c.

Framing Percentage: (check one)

Wall:		15% (16"o.c.)
		12% (24"o.c.)
		9% (48"o.c.)
Floor/Ceiling	✓	10% (16"o.c.)
		7% (24"o.c.)
		4% (48"o.c.)

Wall Weight / sf: (Packages only) NA

List of Construction Components		R-Value: Cavity (R_c)	R-Value: Frame (R_f)
	Outside Surface Air Film	0.170	0.170
1.	Effective R-value of vented crawlspace	6.000	6.000
2.	R-19 fiberglass insulation	19.000	-----
3.	7.25 in fir framing	-----	7.178
4.	0.625 in plywood	0.770	0.770
5.	Carpet & pad	2.080	2.080
6.			
7.			
	Inside Surface Air Film	0.920	0.920
	Total Unadjusted R-Values:	28.940	17.118
		R_c	R_f

Framing Adjustment Calculation:

$$\left[\left(\frac{1/14.535}{1 \div R_c}\right) \times \left(\frac{1-10/100}{1-(Fr.\% \div 100)}\right)\right] + \left[\left(\frac{1/17.118}{1 \div R_f}\right) \times \left(\frac{10/100}{Fr.\% \div 100}\right)\right] = \boxed{0.037}$$

Total U-Value

$$\frac{1/0.037}{1 \div \text{Total U-Value}} = 27.027$$

Total R-Value

Reference Name: FC.19.S2x8.16

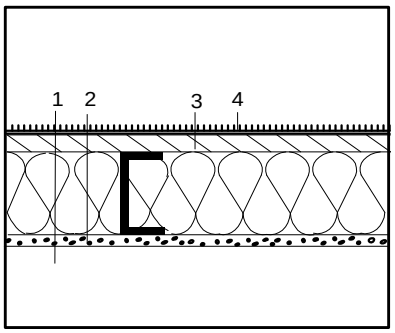

Sketch of Construction Assembly

Assembly Type: (check one)
- ✓ Floor
- Wall
- Ceiling/Roof

Framing Material: Metal

Framing Spacing: 16 "o.c.

Framing Size:

Actual Depth	8.00
Actual Width	1.625

Cavity Insulation:

R-value	19.000
Knock-out (%)	15.000
Web Thickness	0.060

Insulation Tape R-value:

Interior Flange	
Exterior Flange	

List of Construction Components		R-Value
	Outside Surface Air Film	0.170
1.	Effective R-value of vented crawlspace	6.000
2.	1.50 in polyisocyanurate	10.500
3.	0.625 in plywood	0.780
4.	Carpet & pad	2.080
5.		
6.		
7.		
	Inside Surface Air Film	0.920

Calculation:

From EZFRAME = **0.035**

Total U-Value

$$\frac{1/0.035}{1 \div \text{Total U-Value}} = 28.700$$

Total R-Value

Reference Name: FX.19.2x8.16

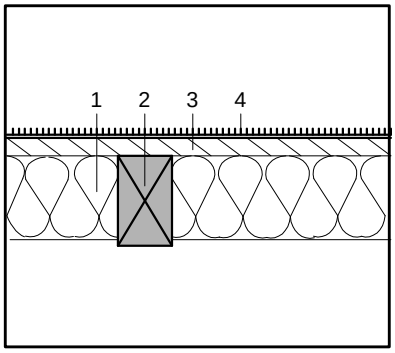

Sketch of Construction Assembly

Assembly Type: (check one)	✓	Floor	
		Wall	
		Ceiling/Roof	
Framing Material:	Wood		
Framing Size:	2 × 8		
Framing Spacing:	16	"o.c.	
Framing Percentage: (check one)	Wall:		15% (16"o.c.)
			12% (24"o.c.)
			9% (48"o.c.)
	Floor/Ceiling	✓	10% (16"o.c.)
			7% (24"o.c.)
			4% (48"o.c.)
Wall Weight / sf: (Packages only)	NA		

List of Construction Components		**R-Value** Cavity (R_c)	Frame (R_f)
	Outside Surface Air Film	0.170	0.170
1.	R-19 fiberglass insulation	19.000	-----
2.	7.25 in fir framing	-----	7.178
3.	0.625 in plywood	0.770	0.770
4.	Carpet & pad	2.080	2.080
5.			
6.			
7.			
	Inside Surface Air Film	0.920	0.920
	Total Unadjusted R-Values:	22.940	11.118
		R_c	R_f

Framing Adjustment Calculation:

$$[(\underset{1\div R_c}{\underline{1/22.940}}) \times (\underset{1-(Fr.\%\div 100)}{\underline{1-10/100}})] + [(\underset{1\div R_f}{\underline{1/11.118}}) \times (\underset{Fr.\%\div 100}{\underline{10/100}})] = \boxed{0.049}$$

Total U-Value

$$\underset{1\div \text{Total U-Value}}{\underline{1/0.049}} = \underset{\textbf{Total R-Value}}{20.408}$$

Reference Name: FX.19.S2x8.16

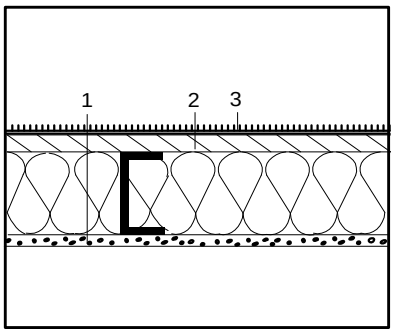

Sketch of Construction Assembly

Assembly Type: (check one)	✓	Floor	
		Wall	
		Ceiling/Roof	
Framing Material:	Metal		
Framing Spacing:	16	"o.c.	
Framing Size:	Actual Depth	8.00	
	Actual Width	1.625	
Cavity Insulation:	R-value	19.000	
	Knock-out (%)	15.000	
	Web Thickness	0.060	
Insulation Tape R-value:	Interior Flange		
	Exterior Flange		

List of Construction Components		**R-Value**
	Outside Surface Air Film	0.170
1.	1.25 in polyisocyanurate	8.750
2.	0.625 in plywood	0.780
3.	Carpet & pad	2.080
4.		
5.		
6.		
7.		
	Inside Surface Air Film	0.920

Calculation:

From EZFRAME = $\boxed{0.048}$

Total U-Value

$$\underset{1\div \text{Total U-Value}}{\underline{1/0.048}} = \underset{\textbf{Total R-Value}}{20.950}$$

Reference Name: FC.21.2x8.16

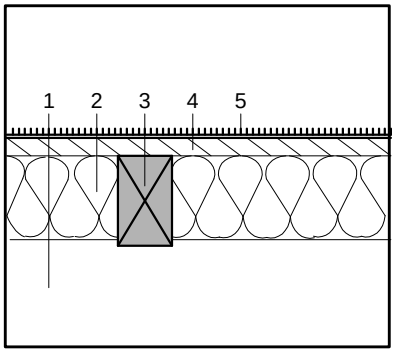

Sketch of Construction Assembly

Assembly Type: (check one) ✓ Floor; Wall; Ceiling/Roof

Framing Material: Wood

Framing Size: 2 × 8

Framing Spacing: 16 "o.c.

Framing Percentage: (check one)

Wall:		15% (16"o.c.)
		12% (24"o.c.)
		9% (48"o.c.)
Floor/Ceiling	✓	10% (16"o.c.)
		7% (24"o.c.)
		4% (48"o.c.)

Wall Weight / sf: (Packages only) NA

List of Construction Components		**R-Value** Cavity (R_c)	Frame (R_f)
	Outside Surface Air Film	0.170	0.170
1.	Effective R-value of vented crawlspace	6.000	6.000
2.	R-21 fiberglass insulation	21.000	-----
3.	7.25 in fir framing	-----	7.178
4.	0.625 in plywood	0.770	0.770
5.	Carpet & pad	2.080	2.080
6.			
7.			
	Inside Surface Air Film	0.920	0.920
	Total Unadjusted R-Values:	30.940	17.118
		R_c	R_f

Framing Adjustment Calculation:

$$[(\underset{1 \div R_c}{\underline{1/30.940}}) \times (\underset{1-(Fr.\% \div 100)}{\underline{1-10/100}})] + [(\underset{1 \div R_f}{\underline{1/17.118}}) \times (\underset{Fr.\% \div 100}{\underline{10/100}})] = \boxed{0.035}$$

Total U-Value

$$\underset{1 \div \text{Total U-Value}}{\underline{1/0.035}} = \underset{\textbf{Total R-Value}}{28.571}$$

Reference Name: FC.21.S2x8.16

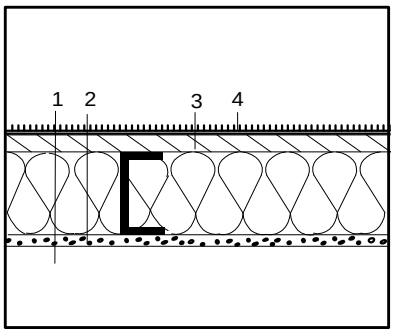

Sketch of Construction Assembly

Assembly Type: (check one) ✓ Floor; Wall; Ceiling/Roof

Framing Material: Metal

Framing Spacing: 16 "o.c.

Framing Size: Actual Depth 8.00; Actual Width 1.625

Cavity Insulation: R-value 21.000; Knock-out (%) 15.000; Web Thickness 0.060

Insulation Tape R-value: Interior Flange; Exterior Flange

List of Construction Components		**R-Value**
	Outside Surface Air Film	0.170
1.	Effective R-value of vented crawlspace	6.000
2.	1.50 in polyisocyanurate	10.50
3.	0.625 in plywood	0.780
4.	Carpet & pad	2.080
5.		
6.		
7.		
	Inside Surface Air Film	0.920

Calculation:

From EZFRAME = **0.034**

Total U-Value

$$\underset{1 \div \text{Total U-Value}}{\underline{1/0.034}} = \underset{\textbf{Total R-Value}}{29.080}$$

Reference Name: FX.21.2x8.16

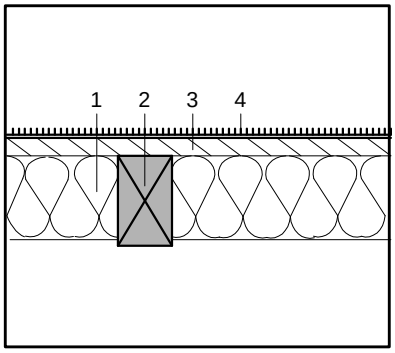

Sketch of Construction Assembly

Assembly Type: (check one)
- ✓ Floor
- Wall
- Ceiling/Roof

Framing Material: Wood

Framing Size: 2 × 8

Framing Spacing: 16 "o.c.

Framing Percentage: (check one)

Wall:		15% (16"o.c.)
		12% (24"o.c.)
		9% (48"o.c.)
Floor/Ceiling	✓	10% (16"o.c.)
		7% (24"o.c.)
		4% (48"o.c.)

Wall Weight / sf: NA (Packages only)

List of Construction Components		R-Value: Cavity (R_c)	R-Value: Frame (R_f)
	Outside Surface Air Film	0.170	0.170
1.	R-19 fiberglass insulation	21.000	-----
2.	7.25 in fir framing	-----	7.178
3.	0.625 in plywood	0.780	0.780
4.	Carpet & pad	2.080	2.080
5.			
6.			
7.			
	Inside Surface Air Film	0.920	0.920
	Total Unadjusted R-Values:	22.950 (R_c)	11.128 (R_f)

Framing Adjustment Calculation:

$$[(\underset{1\div R_c}{\underline{1/24.950}}) \times (\underset{1-(Fr.\%\div 100)}{\underline{1-10/100}})] + [(\underset{1\div R_f}{\underline{1/11.128}}) \times (\underset{Fr.\%\div 100}{\underline{10/100}})] = \boxed{0.045}$$

Total U-Value

$$\underset{1\div \text{Total U-Value}}{\underline{1/0.045}} = \underset{\textbf{Total R-Value}}{\underline{22.220}}$$

Reference Name: FX.21.S2x8.16

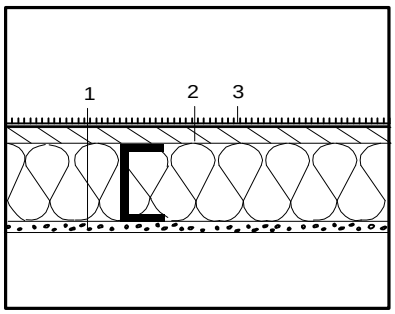

Sketch of Construction Assembly

Assembly Type: (check one)
- ✓ Floor
- Wall
- Ceiling/Roof

Framing Material: Metal

Framing Spacing: 16 "o.c.

Framing Size:

Actual Depth	8.00
Actual Width	1.625

Cavity Insulation:

R-value	21.000
Knock-out (%)	15.000
Web Thickness	0.060

Insulation Tape R-value:

Interior Flange	
Exterior Flange	

List of Construction Components		R-Value
	Outside Surface Air Film	0.170
1.	1.50 in polyisocyanurate	10.50
2.	0.625 in plywood	0.780
3.	Carpet & pad	2.080
4.		
5.		
6.		
7.		
	Inside Surface Air Film	0.920

Calculation:

From EZFRAME = $\boxed{0.043}$

Total U-Value

$$\underset{1\div \text{Total U-Value}}{\underline{1/0.043}} = \underset{\textbf{Total R-Value}}{\underline{23.080}}$$

Reference Name: FC.30.2x10.16

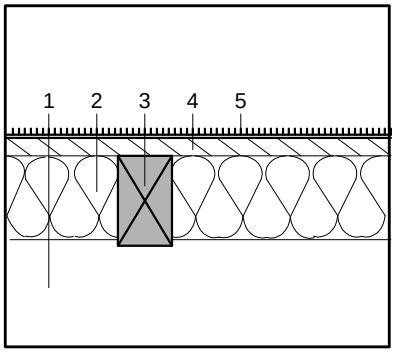

Sketch of Construction Assembly

Assembly Type: (check one) ✓ Floor; Wall; Ceiling/Roof

Framing Material: Wood

Framing Size: 2 × 8

Framing Spacing: 16 "o.c.

Framing Percentage: (check one)

Wall:		15% (16"o.c.)
		12% (24"o.c.)
		9% (48"o.c.)
Floor/Ceiling	✓	10% (16"o.c.)
		7% (24"o.c.)
		4% (48"o.c.)

Wall Weight / sf: NA (Packages only)

List of Construction Components		R-Value: Cavity (R_c)	R-Value: Frame (R_f)
	Outside Surface Air Film	0.170	0.170
1.	Effective R-value of vented crawlspace	6.000	6.000
2.	R-30 fiberglass insulation	30.000	-----
3.	9.25 in fir framing	-----	9.158
4.	0.625 in plywood	0.770	0.770
5.	Carpet & pad	2.080	2.080
6.			
7.			
	Inside Surface Air Film	0.920	0.920
	Total Unadjusted R-Values:	39.940	19.098
		R_c	R_f

Framing Adjustment Calculation:

$$[(\underset{1\div R_c}{\underline{1/39.940}}) \times (\underset{1-(Fr.\%\div 100)}{\underline{1-10/100}})] + [(\underset{1\div R_f}{\underline{1/19.098}}) \times (\underset{Fr.\%\div 100}{\underline{10/100}})] = \boxed{0.028}$$

Total U-Value

$$\underset{1\div \text{Total U-Value}}{\underline{1/0.028}} = \underset{\textbf{Total R-Value}}{\underline{35.714}}$$

Reference Name: FC.30.S2x10.16

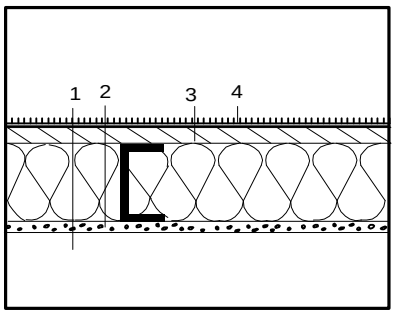

Sketch of Construction Assembly

Assembly Type: (check one) ✓ Floor; Wall; Ceiling/Roof

Framing Material: Metal

Framing Spacing: 16 "o.c.

Framing Size:

Actual Depth	10.000
Actual Width	1.625

Cavity Insulation:

R-value	30.000
Knock-out (%)	15.000
Web Thickness	0.060

Insulation Tape R-value:

Interior Flange	
Exterior Flange	

List of Construction Components		R-Value
	Outside Surface Air Film	0.170
1.	Effective R-value of vented crawlspace	6.000
2.	2.50 in polyisocyanurate	17.50
3.	0.625 in plywood	0.780
4.	Carpet & pad	2.080
5.		
6.		
7.		
	Inside Surface Air Film	0.920

Calculation:

From EZFRAME = **0.026**

Total U-Value

$$\underset{1\div \text{Total U-Value}}{\underline{1/0.026}} = \underset{\textbf{Total R-Value}}{\underline{38.110}}$$

Reference Name: FX.30.2x10.16

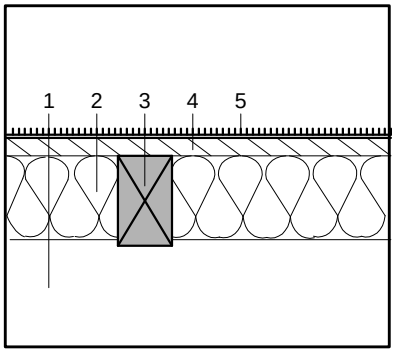

Sketch of Construction Assembly

Assembly Type: (check one) ✓ Floor; Wall; Ceiling/Roof

Framing Material: Wood

Framing Size: 2 × 8

Framing Spacing: 16 "o.c.

Framing Percentage: (check one)

Wall:		15% (16"o.c.)
		12% (24"o.c.)
		9% (48"o.c.)
Floor/Ceiling	✓	10% (16"o.c.)
		7% (24"o.c.)
		4% (48"o.c.)

Wall Weight / sf: (Packages only) NA

List of Construction Components		R-Value: Cavity (R_c)	R-Value: Frame (R_f)
	Outside Surface Air Film	0.170	0.170
1.	R-30 fiberglass insulation	30.000	-----
2.	9.25 in fir framing	-----	9.158
3.	0.625 in plywood	0.770	0.770
4.	Carpet & pad	2.080	2.080
5.			
6.			
7.			
	Inside Surface Air Film	0.920	0.920
	Total Unadjusted R-Values:	39.940	19.098
		R_c	R_f

Framing Adjustment Calculation:

$$[(\frac{1}{33.940}) \times (\frac{1-10/100}{1-(Fr.\% \div 100)})] + [(\frac{1}{13.098}) \times (\frac{10/100}{Fr.\% \div 100})] = \boxed{0.034}$$

$1 \div R_c$ $1 \div R_f$

Total U-Value

$$\frac{1/0.034}{1 \div \text{Total U-Value}} = 29.412$$

Total R-Value

Reference Name: FX.30.S2x10.16

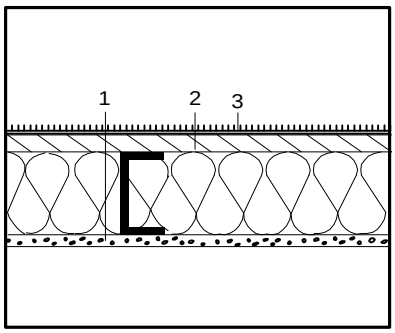

Sketch of Construction Assembly

Assembly Type: (check one) ✓ Floor; Wall; Ceiling/Roof

Framing Material: Metal

Framing Spacing: 16 "o.c.

Framing Size:

Actual Depth	10.000
Actual Width	1.625

Cavity Insulation:

R-value	38.000
Knock-out (%)	15.000
Web Thickness	0.060

Insulation Tape R-value:

Interior Flange	
Exterior Flange	

List of Construction Components		R-Value
	Outside Surface Air Film	0.170
1.	2.50 in polyisocyanurate	17.50
2.	0.625 in plywood	0.780
3.	Carpet & pad	2.080
4.		
5.		
6.		
7.		
	Inside Surface Air Film	0.920

Calculation:

From EZFRAME = **0.031**

Total U-Value

$$\frac{1/0.031}{1 \div \text{Total U-Value}} = 32.110$$

Total R-Value

EZFrame can be purchased by ordering the following:

Publication No.:	P400-94-002R
Cost:	$14.00
Address:	California Energy Commission Pulications, MS-13 P.O. Box 944295 Sacramento, CA 94244-2950